City of Tampa
Wastewater Department

Howard F. Curren AWTP Biosolids Dewatering Pilot Testing Summary and Comparison of Performance Report

FINAL

October 2013

HAZEN AND SAWYER
Environmental Engineers & Scientists

Table of Contents

Section 1.0 Introduction and Background 1-1

1.1 Introduction 1-1
1.2 Objective 1-2
1.3 Dewatering Technologies 1-2

Section 2.0 Pilot Testing Plan 2-1

2.1 Testing Procedure Development 2-1
2.2 Selected Manufacturers and Equipment Setup 2-1
2.3 Testing Measurements 2-5
2.4 Testing Plan Execution 2-6

Section 3.0 Test Results 3-1

3.1 Quantitative Test Results Review 3-1
3.2 Qualitative Test Results Review 3-4

Section 4.0 Data from Manufacturers 4-1

4.1 Pilot Data Collection and Review 4-1
4.2 Polymer Supplier Discussions 4-4

Section 5.0 Conclusions 5-1

5.1 Discussion of Results 5-1
5.2 Final Recommendations 5-7

Section 6.0 Update of Biosolids Processing Assessment Report 6-1

6.1 Recommended Actions 6-1

Section 7.0 Pathogen Reactivation and Regrowth 7-1

7.1 Potential Concerns 7-1

41077-001R2

7.2 References 7-1

Appendices

Appendix A Example RFQ
Appendix B Pilot Testing Performance Reports
Appendix C Equipment Manufacturer Reports
Appendix D Opinion of Capital and Construction Costs
Appendix E Pathogen Reactivation and Regrowth Report

Tables

Table 2.1 Sampling and Laboratory Testing 2-5

Table 3.1 Feed Sludge Sampling Results 3-1
Table 3.2 Existing BFP Performance During Pilot Testing 3-1
Table 3.3 General Correlation of Dewatering Parameters 3-3
Table 3.4 Equipment Performance with each Parameter Optimized 3-3

Table 4.1 Pilot Equipment and Full-Scale Equipment Sizing 4-2
Table 4.2 Recommended Equipment, Operating Conditions, and Performance 4-2
Table 4.3 Reported O&M Parameters 4-4
Table 4.4 Polymer Types and Costs 4-4
Table 4.5 Historical Polymer Usage and Costs for the HFCAWTP 4-5

Table 5.1 Cost Comparison of Dewatering Options (current) 5-2
Table 5.2 Cost Comparison of Dewatering Options (future) 5-3
Table 5.3 Baseline Project – Dewatering System 5-5
Table 5.4 Historical Dewatering Costs 5-6
Table 5.5 Dewatering System Improvement for Land Application 5-6
Table 5.6 Ranking of Alternatives 5-9

Table 6.1 Recommended Dewatering System Capital Improvement Projects 6-3

Figures

After Page

Figure 2-1 Equipment Locations and Connections for Round 1 Testing 2-2

Figure 6-1 Proposed Dewatering Facility 6-1

41077-001R1

Section 1.0
Introduction and Background

1.1 Introduction

A Biosolids Processing Assessment Report (BPAR), by Hazen and Sawyer, dated May 2012, assessed the current condition of the Howard F. Curren Advanced Wastewater Treatment Plant (HFCAWTP) heat drying and sludge dewatering facilities. The BPAR provided recommendations for process improvements and equipment upgrades/replacements to increase system efficiency, reduce operating and sludge disposal costs, and restore system reliability.

The existing sludge dewatering facilities utilize belt filter presses manufactured by Andritz and Pilgrim. The belt filter presses are nearing their end of useful life. As part of the assessment for the existing belt filter presses, the advantages/disadvantages of four dewatering technologies were examined. These included new belt filter presses and replacement centrifuges, screw presses, and rotary fan presses.

It is difficult to accurately predict actual performance of any of these technologies given a specific waste sludge. Therefore, the BPAR recommended that full-scale pilot testing be performed to best determine which of these technologies has a better net present worth if utilized at the HFCAWTP. The following parameters were to be identified in the pilot testing for comparison:

- The expected cake solids output performance
- The expected chemical conditioning requirement
- The expected capture efficiency
- Process optimization techniques
- Electrical power consumption
- Equipment needs and associated capital costs
- The expected labor and maintenance costs

Additionally, it was believed that pilot testing would afford the plant staff an opportunity to become familiar with each technology and the anticipated operation and maintenance needs. Pilot testing of the technologies was performed and this report serves as a summary of the findings from the pilot testing.

1.2 Objective

The objective of this report is to detail the pilot testing procedures, present the testing results, and compare the different technologies as they performed on actual waste sludge generated by the HFCAWTP. This comparison is then used to update the BPAR to make a recommendation as to what dewatering technology to pursue in upgrading the existing sludge dewatering facilities.

1.3 Dewatering Technologies

Four dewatering technologies were chosen for pilot testing as recommended in the BPAR. Although there are other technologies available, some are likely not a good fit for the HFCAWTP and some are relatively new technologies with little experience on municipal sludge. The following four dewatering technologies were pilot tested:

Belt Filter Press

Belt filter presses (BFPs) dewater sludge continuously using one or more moving belts and a series of rollers. The sludge is conditioned prior to the influent and water is removed through the belt filter fabric by gravity drainage and compression. First, the sludge passes through a gravity drainage zone where filtrate is collected and sent to the drainage system. Next, the thickened solids pass through the compression zone where they are squeezed between the porous belts. The solids are contained within the belts and free water is removed. The primary components of a BFP are the frame, belt, rollers, tensioning system, and belt wash system. Belt speed and tension are key control parameters. The City has successfully used BFPs at the HFCAWTP since the 1980's, typically achieving 15 – 17 percent cake solids. New press designs improve reliability, reduce misting and odors, and improve cake solids. Multiple manufacturers are available for this technology including Ashbrook Simon-Hartley, Andritz, Charter Machine, BDP Industries, and several others.

Photo 1: BFP Pilot

41077-001R2

High Solids Centrifuge

High Solids Centrifuges (HSCs) dewater sludge continuously using sedimentation principals enhanced by the application of centrifugal acceleration which is commonly referred to as g-force. The major components of a HSC are the bowl, scroll, frame, and drive. The bowl typically consists of cylindrical and conical sections. The g-force is applied to the sludge by rotating the bowl at high speeds. There are two types of HSCs, countercurrent and co-current. In co-current designs the liquid and solids travel in parallel. In countercurrent designs feed enters the bowl near the intersection of the cylindrical and conical sections. Solids are transported through the conical end by the scroll, which is rotating at a slightly different speed than the bowl. Key control parameters are bowl speed, scroll/bowl differential, and pool depth. As the units rotate at a high speed, there are many important design considerations for HSCs including structural considerations, loading rates, and controls.

Multiple companies manufacturer centrifuges including Alfa Laval, Centrisys, Westphalia, Andritz, Flottweg, and several others.

Photo 2: HSC Pilot

Screw Press

Screw presses dewater sludge continuously by a slow moving shafted screw enclosed in a basket/drum that is constructed of either a wire mesh or perforated plate. Solids are compacted within the flights of the screw by increasing pressure and free water is removed via the basket. There are essentially two types of screw presses available for municipal sludge dewatering applications. These are horizontal and inclined. The largest models of horizontal screw presses are available with higher solids throughput capacities than inclined screw presses. The primary horizontal type manufacturer is FKC Co. Ltd. (Schwing-Bioset also has a horizontal screw press with less U.S. municipal operation history). FKC has been producing screw

Photo 3: Screw Press Pilot

41077-001R2

presses in the United States since 1988, and manufactures screw presses with screw diameters to more than one meter. Huber Technology is the primary producer of inclined screw presses for municipal applications. (BDP Industries manufacturers an inclined screw press similar to Huber's). Currently, their largest press has a screw diameter of 0.8 meters. The major control features are the sludge inlet pressure, loading rate, and screw speed. A consistent sludge feed is also critical to press performance.

Rotary Fan Press

Rotary fan presses (RFPs) continuously dewater sludge by passing the solids through a channel that is bound by screens on either side. The sludge feed pumps along with the pressure controlled outlet of the channel develop pressure within the channel that squeezes the sludge and causes the free water to pass through the screen. The screens are constructed of either wedge wire or perforated plate.

The two main manufacturers of RFPs are Prime Solutions and Fournier.

Photo 4: RFP Pilot

Other dewatering technologies include air drying, vacuum filtration, recessed plate pressure filters, volute press, electro-dewatering, piston press, etc. Air drying is currently available at the HFCAWTP and is used periodically. However, this is a labor intensive option and is not feasible for continuous operation. Vacuum filtration is a technology used in small facilities and is not suitable for this application. Recessed plate pressure filters are capable of achieving high cake solids; however, these systems require a batch operation that is not a good fit for the HFCAWTP and are typically more costly per unit capacity than the other technologies. Other technologies mentioned are emerging technologies with limited experience on municipal sludge. These technologies may have potential but should be tested in smaller scale applications before they could be considered for the HFCAWTP.

Section 2.0
Pilot Testing Plan

2.1 Testing Procedures Development

Hazen and Sawyer developed a pilot test protocol that was reviewed and approved by City staff prior to beginning the tests. The pilot test protocol was for both dewatering and polymer activation equipment. Polymer activation equipment pilot testing is yet to be completed and will be discussed in a separate report. The pilot test protocol for dewatering equipment included testing procedures and sample collection, preparation, analysis, and quality control. Subsequent to the approval of the protocol, Hazen and Sawyer was notified by City staff that the desired pilot testing technologies would need to be advertised in Request for Qualifications (RFQs) format through the City's Purchasing Department to qualified suppliers wishing to participate. RFQs were developed for the four technologies recommended in the BPAR. **Appendix A** includes an example RFQ. The RFQs detailed the testing procedures developed in the pilot testing protocol and explained the testing scenarios and plan execution. Additionally, the RFQs set qualification requirements for the equipment manufacturers and limited the involvement to the most qualified companies. However, it is intended that future dewatering projects will not be limited to the selected manufacturers for pilot testing.

2.2 Selected Manufacturers and Equipment Setup

Five pilot units were selected from the submitted RFQs based on proposed cost and availability of equipment. Equipment for three of the four technologies were all available for pilot testing the week of March 18 – 22, 2013. These included:

- Alfa Laval, Inc. – HSC
- Centrisys Corporation – HSC
- FKC Co. Ltd – screw press
- Huber Technology – screw press
- Prime Solutions, Inc. – RFP

The fourth technology, belt presses, had to be separately tested the week of June 3 – 7, 2013 as the equipment provided by Ashbrook Simon-Hartley was not available the same week that the other technologies were available. The pilot testing for the belt press was similar to the pilot tests run for the other technologies. **Figure 2-1** shows the locations of all of the equipment and connections during the week of March 18 – 22. In order to ensure that the pilot testing can be accurately compared between the two separate weeks

of testing, the operation of the existing BFPs during the two weeks was also evaluated as these existing presses needed to be operated each day following the pilot testing.

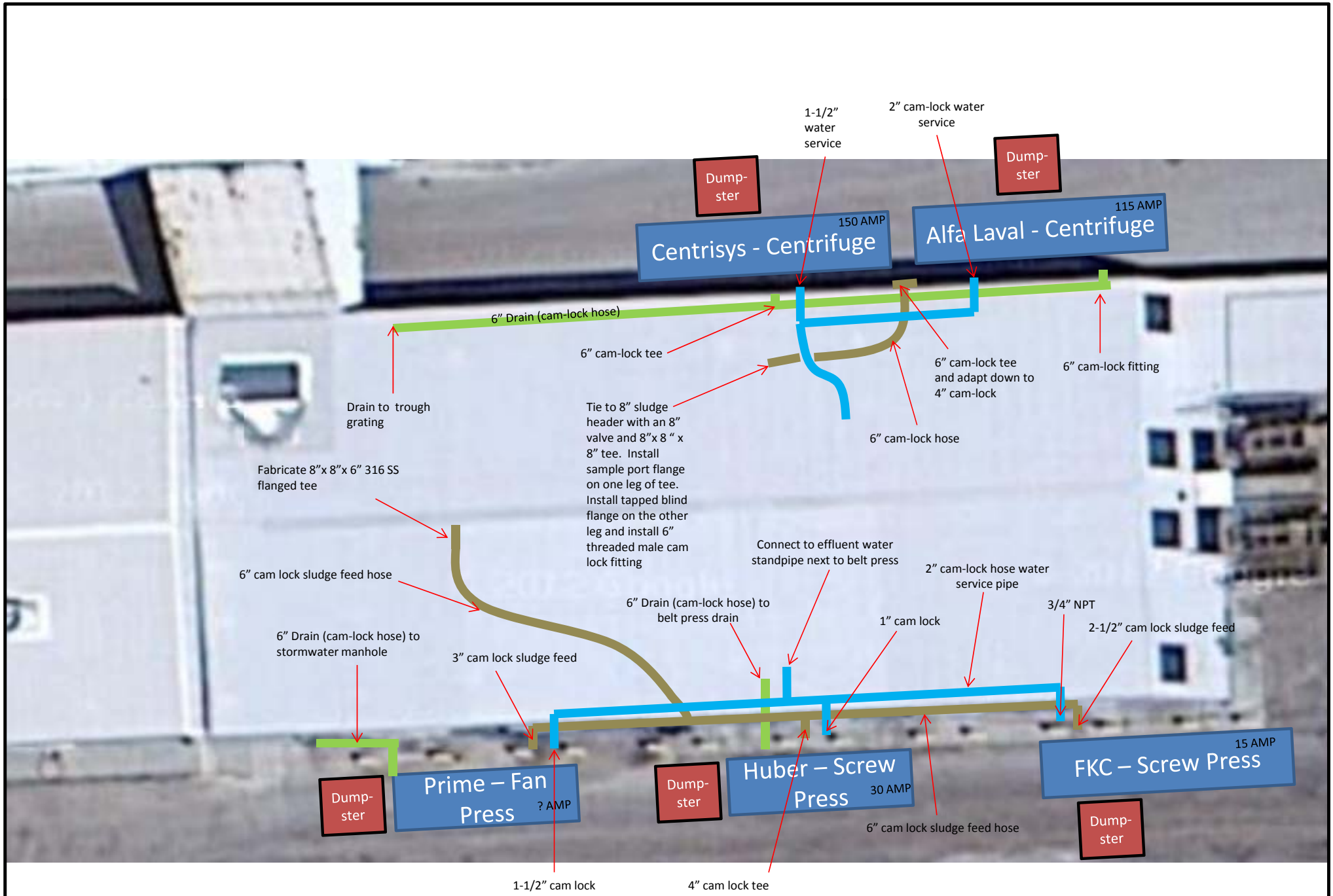

Figure 2-1: Equipment Locations and Connections for Round 1 Testing

For each of the units provided for pilot testing, the City supplied:

- Sludge feed connections
- A means of return plant recycles to the head of the plant
- Non-potable water connections
- Electrical power connections
- A means of collecting and disposing of dewater cake
- Sample containers
- Parking areas

The pilot test equipment manufacturers provided:

- A processing technician to conduct setup, calibration, sampling, and testing services
- Sludge feed pumps
- Dewatering pilot equipment
- Polymer
- Polymer blending and feed equipment
- A means to accurately determine the sludge feed flow rate and polymer usage
- A means of determining power consumption
- Connection hoses and cords
- Equipment controls

2.3 Testing Sampling and Measurements

Pilot test procedures involved sampling and taking measurements of various components during the pilot period. The pilot test protocol included running all of the pilot units (for the tests run with multiple units the week of March 18 - 22) concurrently for a minimum six hour period each day and collecting samples of the feed sludge, dewatered cake, and plant return flow at one hour intervals. Tests run the week of June 3 – 7 for the belt press were run during the same period each day. It was required that all samples were only collected while the pilot equipment was operating under a steady state condition, meaning that samples were not to be collected shortly after a change was made to the process.

Sampling bottles were delivered to the pilot technicians each morning by City staff. The pilot technicians collected the samples and stored them in City supplied coolers, and City staff collected the coolers at the end of each day for delivery to the laboratory. The City chose to use the services of a third party laboratory for the first round of testing the week of March 18 -22 (with the exception of volatile suspended solids (VSS) which was measured by the City's plant lab), and used the City's plant laboratory staff for the entire second round of testing the week of June 3-7. **Table 2.1** is a list of all of the samples collected, the measurement performed by the laboratory for each equipment manufacturer, and the frequency of each sampling event.

Table 2.1
Sampling and Laboratory Testing

Laboratory Test	Sample Location		
	Sludge Feed	Plant Return Flow	Dewatered Cake
TS/TSS (mg/L)[1]	Each Hour	Each Hour	Each Hour
VSS (mg/L)	Each Hour		
COD (mg/L)[2]		Once per Day	
Total Nitrogen (mg/L)		Once per Day	
Total Phosphorous (mg/L)		Once per Day	

[1] total solids/total suspended solids testing varied by sample location

[2] chemical oxygen demand

Each manufacturer determined the testing scenarios to be performed each day. In some instances, multiple scenarios were run during a single day. To ensure that each scenario was well documented for each sampling period, a series of parameters were recorded or calculated each hour by the pilot technicians. These included:

- Flow rate of sludge to pilot unit (gpm)
- Make and type of polymer used
- Average polymer usage (gpm) and (lb active/dry ton) based on the recorded polymer used divided by the calculated dry tons of solids processed
- Activity of emulsion polymer (%)
- Dilution water used (gpm)
- Electrical power consumption (kWh/dry ton) based on total power used by the dewatering equipment divided by the calculated dry tons of solids processed
- Washwater quantity (gal/dry ton) based on total washwater used divided by the calculated dry tons of solids processed
- Other factors determined by the individual equipment manufacturers

2.4 Testing Plan Execution

All of the manufacturers delivered and set up their equipment on Monday, March 18 (June 3 for the belt filter press pilot). All were completed close to midday, and the pilot units were tested in the afternoon to confirm that all connections were adequate and the equipment was operational and able to produce dewatered cake. Most manufacturers chose to run additional jar tests for polymer type and dosage on Monday as well. The remainder of the pilot testing was conducted during the rest of the respective week (Tuesday – Friday).

The plant operators filled the 1.5 million gallon sludge storage tanks each night prior to the dewatering pilot testing to ensure a consistent sludge feed through each day's testing. The pilot technicians started the pilot units around 8 AM each morning, and the first samples were ready around 9 AM. The six hour testing required the last samples to be collected around 2 PM. At that point, the equipment was prepared for shut down for the day, and the plant staff resumed normal operations of the dewatering facility.

As shown in Figure 2.1, a common sludge feed line was provided for the two centrifuge manufactures, and a second common sludge feed was provided for the screw press and rotary fan press manufacturers. Both of these feeds were directly supplied by the 1.5 million gallon sludge storage tanks. Photo 2 below shows a typical example of the sludge feed collection.

Plant return flow from both centrifuge pilots was sent to a common drain trough. Samples were taken directly from taps on the centrate lines at the equipment as shown in Photo 1. Plant return flow from the screw press pilots were sent to drains on the south side of the dewatering building. Before samples were collected, a five gallon bucket was filled with the pressate. Buckets were utilized due to the sporadic nature of solids observed in the pressate. As shown in Photo 4, the solids from the screw presses were clumped together and were not homogenous. Once the five gallon buckets was filled, it was stirred and a sample was taken of the well mixed contents in the bucket. The plant return flow from the rotary fan press was collected in a pan within the pilot trailer which then flowed by gravity into a drain in the dewatering building. Since pressate solids were likely to settle in the pan, pressate samples were taken directly from the discharge of the unit with a small collection container.

Cake samples were taken either directly from the discharge end of the equipment or from the top of the cake pile within the cake collection dumpsters for all of the pilots. Photo 3 shows a typical cake sample procedure. Photos 5 – 8 show the dewatered cake from each technology. The cake is a fairly dark black color with small white crystals throughout. The black color is typical for an anaerobically digested sludge, and the small white crystals are struvite. The City is currently investigating options for struvite recovery, but an official plan has not been adopted by the City.

Photo 1: Centrate Collection

Photo 2: Feed Sludge Sampling

41077-001R2

Photo 3: Cake Sampling

Photo 4: Pressate from Screw Press

Photo 5: Cake from Centrifuge

Photo 6: Cake from Screw Press

41077-001R2

Photo 7: Cake from RFP

Photo 8: Cake from BFP

Photo 9: Polymer System

41077-001R2

Section 3.0
Test Results

3.1 Quantitative Test Results Review

Due to errors by the third party laboratory hired to analyze the samples for the testing conducted the week of March 18 - 22, some of the feed sludge measurements could not be obtained. However, the feed sludge remained fairly consistent during the week as evidenced by the small minimum to maximum ranges listed in Table 3.1.

Table 3.1
Feed Sludge Sampling Results

Measurement	Testing Results Week of March 18-22	Testing Results Week of June 3-7
Minimum TSS (%)	1.68	1.69
Average TSS (%)	**1.81**	**1.87**
Maximum TSS (%)	2.10	1.95
Minimum VSS (% of TSS)	73.5	69.2
Average VSS (% of TSS)	**74.9**	**71.6**
Maximum VSS (% of TSS)	76.2	74.9

Total suspended solids showed a smaller minimum to maximum range and a slightly higher average value in the second week of testing. Volatile suspended solids percentage showed a slightly larger minimum to maximum range and a slightly lower average value in the second week of testing. These differences do not indicate a significant change in day to day feed sludge characteristics but the lower VSS on the tests run in June may indicate a somewhat significant change in feed sludge between the two test weeks. In addition, the existing BFPs were needed each day following the pilot testing to process the daily biosolids for the plant. The performance data from the BFPs from the City's laboratory for both weeks of pilot testing is provided in Table 3.2 below.

Table 3.2
Existing BFP Performance During Pilot Testing

Date	Cake TS (%)	Cake VS (%)
3/19/13	14.85	78.52

41077-001R2

Table 3.2
Existing BFP Performance During Pilot Testing

Date	Cake TS (%)	Cake VS (%)
3/20/13	14.9	68.34
3/21/13	14.77	74.15
3/22/13	14.7	76.86
6/4/13	17.08	71.6
6/5/13	16.94	72.03

The table suggests that there may have been a significant difference in inherent dewaterability of the sludge during the different weeks of pilot testing. The average total cake solids was 14.8% in March and 17.0% in June. The average volatile solids percentage was 74.5% in March and 71.8% in June which is consistent with the other laboratory testing.

Appendix B contains summary tables of the sampling test results and other performance data submitted by the manufacturers. Careful review of the pilot test results is necessary due to some variances in the tests performed. Although most of the technologies were tested concurrently in March, one of the technologies, the belt press, was tested separately in June. On that week in June, there was significant rain events forcing the belt press pilot test to be run on two long days rather than the four days the other technologies ran in March. In addition, each of the equipment manufacturers controlled how their pilot equipment was operated and as a result achieved optimum conditions at differing times. Some manufacturers may have achieved optimum conditions for a majority of the time while others may have only achieved them for a few hours. This does not necessarily mean that one technology is easier to optimize compared to another. Rather, it is a potential indication of the varying level of optimizing skill of the operators, a difference in approach to optimization between operators, along with the possibility that there may be more substantial effects of the various control parameters from one technology to another. It is noted that the operator for the Alfa Laval centrifuge pilot test in March was the same individual that ran the Ashbrook belt press pilot test in June (the two manufacturers are owned by the same company). Lastly, the size of the pilot units varied significantly such that varying scale up factors are needed from one technology over another.

In reviewing the pilot test results, certain key parameters were identified to compare the performance of each technology as compared to another. These factors included solids

throughput (dry lbs/hour), total solids content (%) of the dewatered cake, polymer consumption (lb active/dry ton), electrical power consumption (kWh/dry ton), and capture rate (%). Electrical power use and capture rate are relative constant for a particular technology. Throughput, cake solids, and polymer usage are inter-related and must be optimized when operating dewatering equipment. Table 3.3 shows the general correlation between these parameters when the goal is to optimize one.

Table 3.3

General Correlation of Dewatering Parameters

Goal/Objective	Solids Throughput	Cake Solids	Polymer Usage
Maximize Throughput	---	↓	↑
Maximize Cake Solids	↓	---	↑
Minimize Polymer Usage	↓	↓	---

Correlations between these parameters vary from one application to another. Therefore, pilot testing of equipment is the best means of obtaining the data needed to predict optimal performance criteria.

Table 3.3 shows the relative values for the throughput, cake solids, and polymer usage for each pilot test unit when one of the three parameters (shown in RED) was optimized during the testing. In most cases, Table 3.4 supports the general correlation of parameters presented in Table 3.3. Additionally, Table 3.4 shows that each technology is capable of achieving similar low polymer usage and high dewatered cake solids as any other technology. However, optimal polymer usage and/or optimal cake solids is often accomplished at an unacceptable value for one or more of the other parameters.

Table 3.4

Equipment Performance with each Dewatering Parameter Optimized

Manufacturer	Polymer Usage (lb/DT)	Dewatered Cake Total Solids (%)	Solids Throughput (dry lb/hr) [1]
Alfa Laval	**31.5** [2]	22.2	362
	46.6	**23.7**	317
	34.4	22.4	**407**
Centrisys	**31.5**	22.7	**718**

41077-001R2

Table 3.4
Equipment Performance with each Dewatering Parameter Optimized

Manufacturer	Polymer Usage (lb/DT)	Dewatered Cake Total Solids (%)	Solids Throughput (dry lb/hr) [1]
	55.4	**24.5**	431
FKC	**33.5**	17.3	15
	74.3	**23.9**	20
	77.7	17.9	**39**
Huber	**35.5**	17.9	**95**
	91.5	**24.1**	57
Prime Solutions	**28.5**	15.3	56
	36.2	**23.8**	88
	41.3	15.3	**189**
Ashbrook	**17.7**	19.3	388
	49.5	**25.4**	377
	22.3	20.1	**508**

1 Throughput values are relative to the size of the pilot unit and cannot be directly compared one technology to another. A comparison of pilot equipment and full scale sizing is provided in the following section.

2 Optimized dewatering parameters are shown in bold red.

Each manufacturer was asked to review their own test results and submit a recommended model number sized to provide the specified solids throughput along with the total cake solids content, polymer consumption rate, motor horse power, and capture rate they were willing to guarantee based on the pilot test performance. These values are discussed in Section 4 and were reviewed and compared with the pilot test data to determine the proper values to use in comparing the technologies on a net present worth basis.

3.2 Qualitative Test Results Review

During the testing, the cake solids were observed. As noted previously, the cake was consistent with anaerobically digested sludge and contained struvite crystals. In physically comparing the dewatered cake produced by the various technologies, the centrifuge cake appeared to be more “crumbly” than the other technologies. The BFP and

screw presses appeared fairly comparable in cake consistency, while the rotary fan press seemed to be more “clumpy” in nature. This was likely a function of the way the sludge is extruded from the rotary fan which tends to form a brick like cake discharge. In general, physically comparing the dewatered cake is in agreement with the test results which indicate that the cake from the centrifuges will likely be of a higher solids content than any of the other technologies.

In physically comparing the centrate from the centrifuges versus the pressate from both of the screw presses, the pressate contained intermittent clumps of solids while the centrate was relatively clear of solids. This indicates that the capture rate for the centrifuges is generally higher than either screw press. Filtrate from the belt filter press and pressate from the rotary fan press appeared to be similar to the centrate from the centrifuges.

Section 4.0
Data from Manufacturers

4.1 Pilot Data Collection and Review

Each of the equipment manufacturers were required to submit a summary report following the pilot testing. The primary intent of the summary report was to obtain a recommendation for equipment sizing, quantity, and model number needed to meet the required sludge throughput for full scale operation at the HFCAWTP based on the pilot test results. The manufacturers were also to submit the following information assuming the recommended quantity and model number of units were used:

- Expected cake solids
- Expected polymer usage per dry ton of solids
- Expected capture rate
- Budgetary pricing
- Estimated maintenance hours per hour of operation
- Suggested preventative maintenance hours per hour of operation
- Suggested operator hours per hours of operation
- Total connected horsepower
- Daily washwater requirement
- Dimensions, weights, and structural design forces

The submitted cake solids, polymer usage, and capture rate were to be those values the manufacturer was willing to guarantee should their equipment be placed in full scale service. The submitted data was used to compare the four technologies for expected annual operating costs and capital investment required in order to make a final recommendation to the City on which technology best suits their needs. This information will eventually be used by the City to develop detailed plans and specifications for dewatering system improvements based on the recommended technology.

Appendix C contains the summary reports from the six equipment manufacturers.

Table 4.1 is a summary of the pilot testing equipment sizing and the recommended size of the full-scale equipment from each manufacturer in the typical units used for comparing each technology between manufacturers. Screw press size is based on the diameter

41077-001R2

of the screw. Centrifuge size is the diameter of the bowl. Rotary fan press size is the diameter of the fan. Belt filter press size is the width of the belt.

Table 4.1
Pilot Equipment and Full-Scale Equipment Sizing

Manufacturer	Pilot	Recommended Equipment
FKC Co. Ltd	0.2 meter	1.0 meter
Huber Technologies	0.28 meter	0.8 meter
Alfa Laval	14 inch	25 inch
Centrisys	18 inch	26 inch
Prime Solutions	Dual 36 inch	Quad 48 inch
Ashbrook Simon-Hartley	0.6 meter	2.0 meter

Table 4.2 is a summary of the submitted parameters for each manufacturer's recommended equipment. The recommended equipment for each manufacturer is based on an operating schedule of 24 hours per day and 7 days per week with a sludge loading of 32 dry tons per day at approximately two percent solids.

Table 4.2
Recommended Equipment, Operating Conditions, and Performance

	Alfa Laval	Centrisys	FKC	Huber	Prime Solutions	Ashbrook
Recommended Model	Aldec G2-115	CS26-4	BHX-1000X5500L	RoS3Q-800	RFP48Q	Win-klepress HS
No. of Duty Units	2	2	4	4	3	2
Budget Price per Unit	$550,000	$588,000	$265,000	$300,000[2]	$590,000	$475,000
Total Dewatering Equipment Cost	$1.1 M	$1.176 M	$1.06 M	$1.2 M	$1.77 M	$0.95 M
Total Connected Horsepower	100	165	6.5	5	18.25	22
Cake Solids	21.8	22.0	17.0	20.0	14-18	19-22

41077-001R2

Table 4.2
Recommended Equipment, Operating Conditions, and Performance

	Alfa Laval	Centrisys	FKC	Huber	Prime Solutions	Ashbrook
(%)[1]						
Active Polymer Usage (lb/DT)[1]	40	40	39	39	30-50	25-30
Capture Rate (%)	95	95	90	90 [4]	95	95
Daily Washwa-ter Requirement (gal)	2,400[3]	4,000	25,920	37,800	28,800	115,200

[1] When a range was provided, the worst case is assumed in further calculations.

[2] Had to be assumed because quoted price included polymer system

[3] Alfa Laval provided a washwater flow rate only. The daily washwater requirement was determined by multiplying the flowrate with the wash time reported by Centrisys.

[4] Capture rate for the screw presses was assumed to be 90% for both manufacturers as explained below.

It is important to note that the capture rate for most of the manufacturers is listed at 95 percent. However, the procedure for testing the pressate from the screw press can lead to a deceptively higher than actual value due to the nature of the process. Solids tend to accumulate on the exterior of the basket/drum of the screw press during normal operations, and only a portion of the solids are directed to the pressate drain. However, during a wash cycle, the solids that have accumulated on the basket are quickly sent to the drain. Therefore, the majority of solids in the pressate are directed to the drain in a relative short period. Since the flow rate of the pressate could not be accurately measured during the wash and non-wash cycles, it was impossible to accurately determine the actual capture rate during the pilot testing. However, recent performance testing of full-scale screw presses in operation has shown that a capture rate around 90 percent or slightly higher is typical. Total suspended solids concentrations in the pressate during non-wash conditions was typically less than 1,000 mg/L, while TSS during wash cycles averaged near 20,000 mg/L. Wash cycles generally last for 1-5 minutes and are spaced 30 minutes apart.

Table 4.3 contains additional information provided by the equipment manufacturers in the summary report.

Table 4.3
Reported O&M Parameters

O&M Parameter (per 100 Hours of Operation)	Alfa Laval	Centrisys	FKC	Huber	Prime Solutions	Ashbrook
Estimated Maintenance Hours	NR	0.3	0.1	0.75	0.3[1]	NR
Suggested Preventative Maintenance Hours	0.75	0.78	0.1	0.75	0.1[1]	2
Suggested Operator Hours	4	8	4	7.5	NR	12.5

[1] Assumed based on life of parts

NR – Not reported

The centrifuge manufacturer Centrisys offers an annual maintenance contract option that is available for most centrifuge manufacturers' equipment. The approximate cost for the contract is eight percent of the capital cost for each centrifuge (about $50,000 per year per centrifuge). The manufacturer claims that the turnaround time for maintenance is one week or less.

4.2 Polymer Supplier Discussions

The three main suppliers of emulsion type polymers were contacted regarding pricing of the various polymers that were used by the pilot equipment. These included Ashland Chemical, SNF Polydyne, and BASF. Table 4.4 is a summary of the various polymers used during the pilot testing and the quoted price assuming historical polymer usage at the HFCAWTP as presented in Table 4.4. These prices are planning level and are likely higher than actual pricing received by the City. This is further evident with the historical unit pricing presented in Table 4.5.

Table 4.4
Polymer Types and Costs

Polymer Type	Cost per Pound Neat	Activity	Cost per Pound Active
Ashland			
K279FLX	$1.25	46%	$2.72
K260FL	$1.25	46%	$2.72
K275FLX	$1.25	46%	$2.72

41077-001R2

Table 4.4
Polymer Types and Costs

Polymer Type	Cost per Pound Neat	Activity	Cost per Pound Active
K148L	$1.25	46%	$2.72
BASF			
Zetag 8818	$0.95	46%	$2.07
Zetag 8819	$0.95	42%	$2.26
Ciba 7878	$1.40	50%	$2.80
SNF Polydyne			
EM840CT	$1.00	41%	$2.44
EM840LOB	$1.00	42%	$2.38
C6292	$1.00	45%	$2.22
Z8849FS	$1.00	40%	$2.50
C6266	$1.00	NR	----

NR = Not Reported

Polymer density is approximately 8.6 lb/gal for all types. The resulting range of costs is approximately $8 - 12 per gallon, with the actual polymer cost likely being on the low end of the range or lower as shown by the historical unit price to the City listed in Table 4.5.

Table 4.5
Historical Polymer Usage and Costs for the HFCAWTP

Year	Data Reported by City					Solids Processed (DT/d)	Polymer Usage (gal/DT)	Neat Polymer Usage (lb/DT)
	Polymer Used (gal)	Unit Price ($/gal)	Polymer Cost ($/yr)	Sludge Volume (MG/yr)	Sludge Solids (%)			
2002	118,919	$6.513	$774,519	142.4	2	32.5	10.0	86.1
2003	118,875	$6.513	$774,233	136.5	2.1	32.7	9.9	85.5
2004	131,309	$6.513	$855,216	147.4	2.1	35.4	10.2	87.5
2005	130,366	$4.456	$580,911	161.8	1.9	35.1	10.2	87.5
2006	148,199	$5.570	$825,468	150.8	2.1	36.2	11.2	96.5
2007	136,639	$7.199	$983,664	136.9	2.4	37.5	10.0	85.8
2008	149,976	$7.456	$1,118,221	132	2.28	34.4	12.0	102.8
2009	163,431	$7.456	$1,218,542	120.4	2.35	32.3	13.9	119.1
2010	159,482	$7.328	$1,168,684	---	---	---	---	---
2011	152,334	$6.902	$1,051,409	---	---	---	---	---

41077-001R2

Table 4.5
Historical Polymer Usage and Costs for the HFCAWTP

Year	Data Reported by City					Solids Processed (DT/d)	Polymer Usage (gal/DT)	Neat Polymer Usage (lb/DT)
	Polymer Used (gal)	Unit Price ($/gal)	Polymer Cost ($/yr)	Sludge Volume (MG/yr)	Sludge Solids (%)			
Average	140,953	$6.59	$935,087	141.0	2.2	34.5	10.9	93.8

* The incomplete portion of the table is a result of missing data for yearly sludge production in 2010 and 2011.

Projected polymer usage from the equipment manufacturers ranged from 25 to 50 lb active/dry ton. The activity of the polymers ranged from 40 to 50 percent. This calculates to an approximate neat polymer usage of 88 lb/dry ton (or 10.2 gal/DT), which is close to the historical average. The required polymer usage for new dewatering equipment should not be significantly different than historical polymer usage. At 32 dry ton/day solids production, the estimated neat polymer usage is 330 gal/day, which at a polymer cost of $9/gal, results in an estimated yearly polymer cost of around $1M. This is also close to the historical yearly costs for polymer use at the plant, particularly for the last several years. Polymer costs have a significant impact on net present worth such that the technologies that use less polymer will have a more favorable result in the net present worth comparison. Polymer use is as significant as comparable electrical power use costs and differences in hauling costs resulting from cake solids percent.

Section 5.0
Conclusions

5.1 Discussion of Results

Since there are many annual costs associated with dewatering, and the various technologies may require substantially different capital investment, summary tables have been developed to facilitate this comparison. Tables 5.1 and 5.2 are net present worth comparisons for the four technologies. **Appendix D** contains the planning level capital cost estimates for each technology used in these tables. Table 5.1 is based on the current solids production at the facility of 32 dry tons per day at a 56 mgd plant influent. Table 5.2 is based on the estimated solids production if the plant were receiving the rated capacity of 96 mgd (i.e, 60 dry tons per day solids production). The recommended size and quantities of units listed is based on 24 hour operation, 7 days a week, similar to that currently practiced by the City for dewatering operations.

The values listed in Tables 5.1 and 5.2 are based on the information submitted by the manufacturers based on past performance and interpretation of their respective pilot test results. The net present worth values slightly favor the belt presses over centrifuges with screw presses as a close third. While the hauling cost savings of a centrifuge system (due to the increase in cake dryness) are significant, the overall yearly costs for polymer and electrical power favor a belt press system even more so. In addition, the initial capital cost for the belt filter press system is lower than that for the centrifuge system.

Table 5.3 is a summary of the net present worth calculations presented in Tables 5.1 and 5.2. Also included in Table 5.3 is the annual cost in $/dry ton for each system. On a dollar per dry ton basis, the annual costs for a belt press system and a centrifuge system are both significantly less than existing annual costs but the initial capital costs and the estimated annual costs both favor a belt press system based on reported values. The costs associated with the baseline condition were detailed in the BPAR.

As the City has had many years of experience with belt filter presses, some adjustment of the reported values claimed by the belt filter press manufacturer may be justified. This is discussed in more detail following Table 5.5.

Table 5.1 - City of Tampa HFCAWTP Dewatering Pilot Testing

Cost Comparison of Dewatering Options

Land Application Disposal at Current Biosolids Production Rates

Interest Rate:	5.0%	Electricity Cost (per kWh):	$0.085
Time Period (yrs):	20	Maintenance Staff Rate ($/hr):	$30.00
Operation Staff Rate ($/hr):	$30.00	Active polymer cost (per lb):	$2.33
Sludge % Solids Input:	2.00%	Hauling Costs ($/wet ton):	$21.00
WAS Rate (Mgal/week):	2.69	Treatment Cost for Return ($/lb):	$5.00

Category	Characteristic	Centrifuge	Screw Press	Belt Press	Rotary Fan Press
	Number of Duty Units	2	4	2	3
	Sludge feed rate (gpm)	133.2	66.6	133.2	88.8
	Sludge % solids output	22%	17%	19%	15%
	Net product (dry tons / day)	32.0	32.0	32.0	32.0
	Capture Rate (%)	95%	90%	95%	95%
	Net product (wet tons / week)	967	1,186	1,120	1,419
	Active Polymer use (lbs/dry ton)	40.0	39.0	30.0	50.0
	Polymer use (lbs/week)	8,960	8,736	6,720	11,200
	Power Use (kWh/DT)	80	0.5	30	20
	Power use (kWh/week)	17,920	112	6,720	4,480
Hours of Operation and O&M Manhours Required	Unit hours operated/week per unit	168	168	168	168
	Unit hours operated/day per unit	24.0	24.0	24.0	24.0
	Days operated per week	7.0	7.0	7.0	7.0
	Operator hours/hour operated	0.04	0.04	0.125	0.08
	Maint. hours/hour operated	0.003	0.001	0.010	0.003
	PM hours/hour per unit	0.008	0.001	0.020	0.001
	Total operation hours per week	7	7	21	14
	Total Maintenance hours per week	2	1	6	1
Initial Capital and Annual O&M Costs	Estimated annual oper ($/yr) [A]	$10,920	$10,920	$32,760	$21,840
	Estimated annual maint ($/yr) [B]	$3,120	$1,560	$9,360	$1,560
	Estimated annual parts ($/yr) [C]	$15,000	$500	$15,000	$2,000
	Polymer cost ($/yr) [D]	$1,085,594	$1,058,454	$814,195	$1,356,992
	Electrical cost ($/yr) [E]	$79,206	$495	$29,702	$19,802
	Hauling costs ($/yr) [F]	$1,056,262	$1,294,984	$1,223,040	$1,549,184
	Plant Return Treatment Cost ($/yr) [G]	$16,000	$32,000	$16,000	$16,000
	Total Initial Capital Cost	$11,900,000	$13,400,000	$11,000,000	$15,800,000
	Annual Costs Land Application [A+B+C+D+E+F+G]	$2,300,000	$2,400,000	$2,100,000	$3,000,000
	Net PW for Annual Costs Land Application	$28,663,000	$29,909,000	$26,171,000	$37,387,000
	Land Application 20-year Net Present Worth ($)	**$40,600,000**	**$43,300,000**	**$37,200,000**	**$53,200,000**

Table 5.2 - City of Tampa HFCAWTP Dewatering Pilot Testing

Cost Comparison of Dewatering Options

Land Application Disposal at Future Biosolids Production Rates

Interest Rate:	5.0%	Electricity Cost (per kWh):	$0.085
Time Period (yrs):	20	Maintenance Staff Rate ($/hr):	$30.00
Operation Staff Rate ($/hr):	$30.00	Active polymer cost (per lb):	$2.33
Sludge % Solids Input:	2.00%	Hauling Costs ($/wet ton):	$21.00
WAS Rate (Mgal/week):	5.04	Treatment Cost for Return ($/lb):	$5.00

Category	Characteristic	Centrifuge	Screw Press	Belt Press	Rotary Fan Press
	Number of Duty Units	4	8	4	6
	Sludge feed rate (gpm)	124.9	62.5	124.9	83.3
	Sludge % solids output	22%	17%	19%	15%
	Net product (dry tons / day)	60.0	60.0	60.0	60.0
	Capture Rate (%)	95%	90%	95%	95%
	Net product (wet tons / week)	1,814	2,224	2,100	2,660
	Active Polymer use (lbs/dry ton)	40.0	39.0	30.0	50.0
	Polymer use (lbs/week)	16,800	16,380	12,600	21,000
	Power Use (kWh/DT)	80	0.5	30	20
	Power use (kWh/week)	33,600	210	12,600	8,400
Hours of Operation and O&M Manhours Required	Unit hours operated/week per unit	168	168	168	168
	Unit hours operated/day per unit	24.0	24.0	24.0	24.0
	Days operated per week	7.0	7.0	7.0	7.0
	Operator hours/hour operated	0.04	0.04	0.125	0.08
	Maint. hours/hour operated	0.003	0.001	0.010	0.003
	PM hours/hour per unit	0.008	0.001	0.020	0.001
	Total operation hours per week	7	7	21	14
	Total Maintenance hours per week	2	1	6	1
Initial Capital and Annual O&M Costs	Estimated annual oper ($/yr) [A]	$10,920	$10,920	$32,760	$21,840
	Estimated annual maint ($/yr) [B]	$3,120	$1,560	$9,360	$1,560
	Estimated annual parts ($/yr) [C]	$15,000	$500	$15,000	$2,000
	Polymer cost ($/yr) [D]	$2,035,488	$1,984,601	$1,526,616	$2,544,360
	Electrical cost ($/yr) [E]	$148,512	$928	$55,692	$37,128
	Hauling costs ($/yr) [F]	$1,980,491	$2,428,094	$2,293,200	$2,904,720
	Plant Return Treatment Cost ($/yr) [G]	$30,000	$60,000	$30,000	$30,000
	Total Initial Capital Cost	$11,900,000	$13,400,000	$11,000,000	$15,800,000
	Annual Costs Land Application [A+B+C+D+E+F+G]	$4,200,000	$4,500,000	$4,000,000	$5,500,000
	Net PW for Annual Costs Land Application	$52,341,000	$56,080,000	$49,849,000	$68,542,000
	Land Application 20-year Net Present Worth ($)	**$64,200,000**	**$69,500,000**	**$60,800,000**	**$84,300,000**

A condition assessment was performed as part of the BPAR for the existing equipment and components of the dewatering system. A summary of the repairs needed, and the cost associated with these repairs in included in Table 5.3. These repair costs will be used as baseline costs for the purpose of comparing alternate dewatering system upgrades. Typically, a baseline cost is derived from a “do nothing” approach that includes the associated operation and maintenance costs for a predetermined period. However, in this situation, the repairs recommended in Table 5.3 are considered the minimum needed for the dewatering system if the system is to remain in reliable operation. The cost of operation of the dewatering system would remain essentially the same. Therefore, the comparison to alternate improvements will be based on the capital investment and existing higher operational costs of the baseline approach versus the higher capital investment and the potential annual operational savings using the alternate approach.

The current costs for dewatering were evaluated as part of the BPAR. These costs were split into various components as presented in Table 5.4.

Table 5.3
Baseline Project – Dewatering System
Estimated Costs for Repairing Individual Components of Dewatering System

Component	Repairs Needed	Opinion of Costs
Belt Filter Presses[1]	Replace two presses Repair three presses Provide means for segregating filtrate from washwater[2]	$1,500,000
Sludge Feed Pumps	Replace five (140 gpm) pumps	$100,000
Polymer Feed System	Replace controls cabinet Replace five DC drives for polymer feed pumps with VFDs Remove original feed piping to press inlets	$150,000
Conveyance System	Convert all belt conveyors to screw conveyors	$1,100,000
Dewatering Building and Truck Loading Structure	Recoat all structural steel members Replace all metal piping Repair/upgrade the ventilation system Inspect and repair corroded concrete components	$700,000[3]
Boost Water Pumps	Replace pumps 1 and 3 with pumps to match 2 and 4	$40,000
Sludge Grinders	Rebuild all four units	$40,000
Electrical and Instrumentation	Remove unused electrical components Inspect and replace non-standard components	$150,000
Overhead & Profit	Approximately 20% of total cost	$700,000
Management and Engineering	Approximately 30% of total cost plus O&P	$1,300,000
Total		**$5,800,000**

[1] *The capacity of each belt press is 16.8 dry tons per day. Based on a maximum of four units required. Therefore, one backup is provided in this scenario. The others will be abandoned.*

[2] *Segregation of filtrate from washwater would be recommended as a part of any sidestream treatment project effort.*

[3] *This does not include existing $375,000 work order to replace some of the steel piping*

41077-001R2

Table 5.4
Historical Dewatering Costs

Cost Item	Cost Range (per dry ton)
Disposal[1]	$ 120 – 125
Maintenance Parts	$ 25 – 30
Polymer	$ 50 – 75
Electrical Power	$ 3 – 5
Operations Labor[2]	$ 20 – 25
Maintenance Labor[3]	$ 10 – 12
Total	**$ 228 – 272**
Total (Average)	**$ 250**

[1] Based on current hauling and disposal contract

[2] Assumes one operator 24/7 at $30/hour and 32 DT/day

[3] Assumes 4,000 hour/year at $30/hour and 32 DT/day

Table 5.5
Dewatering System Improvements for Land Application
Comparison for Dewatering Alternatives

Alternative	Baseline Existing BFP	1 HSC	2 SP	3 BFP	4 RFP
Capital Costs (in millions)	$5.80	$11.90	$13.40	$11.00	$15.80
Annual Costs at Current Flows (in millions)	$2.90	$2.30	$2.40	**$2.10**	$3.00
Annual Costs at Plant Capacity Flows (in miilions)	$5.50	$4.20	$4.50	**$4.00**	$5.50
Annual Costs at Current Flows ($/DT)	$250	$197	$205	**$180**	$257
Annual Costs at Plant Capacity Flows ($/DT)	$250	$192	$205	**$183**	$251
Annual Savings at Current Flows (in millions)	$0.00	$0.60	$0.50	**$0.80**	($0.10)
Annual Savings at Plant Capacity Flows (in millions)	$0.00	$1.30	$1.00	**$1.50**	$0.00

[1] Biosolids production at current flows is 32 DT/day x 365 days
Biosolids production at plant capacity flows is 60 DT/day x 365 days
[2] Values in **BOLD** represent the most favorable alternative

41077-001R2

5.2 Final Recommendations

The City has been using belt filter presses for many years. The pilot unit for the Ashbrook belt filter press is reported to incorporate enhanced dewatering capabilities over the City's existing belt presses due to upgrades in technology for these units. As such, some improvement in performance can be expected if newer replacement units were installed in place of the existing units. However, the reported minimum cake solids of 19% and the reported maximum polymer usage of 30 lbs/DT both can be considered somewhat optimistic given existing unit performance. The existing belt presses only achieve 15 to 16% cake solids and use more than 40 lbs of active polymer per dry ton. A more plausible expected cake solids for an enhance belt press might be 18% (still 2-3% higher than historical cake solids from a belt press). A more plausible expected polymer usage might be 35 lbs/DT (more in line with historical usage rates and still significantly lower than centrifuges).

The belt press pilot unit was tested on a separate week than the rest of the technologies. This introduced variables in the tests that lead to some uncertainty in the reported values. The VSS content in the feed sludge was lower during the belt filter press pilot tests which can lead to more favorable conditions for dryer cake production. In addition, the existing BFPs were operated during both weeks of pilot testing, and serve as a "control" between the separate weeks. A 2.2% increase in the total cake solids was observed during the week of the BFP pilot testing as compared with the other equipment pilots. Therefore, it can be assumed that if the BFP pilot had been available during the March testing period, a reduction in the total cake solids of about two percent is likely. The belt filter pilot tests were performed over a more condensed period due to heavy rains which may have led to skewed values by not having more data for comparison. The belt press pilot unit requires a scale up factor of nearly twice that of the centrifuge pilot units to meet the full size units required for actual sludge dewatering needs. The higher the scale up factor leads to less assurance that the full scale unit will perform as well as the pilot unit. These uncertainties, along with historical performance of belt presses, give ample cause to adjust the reported values for belt presses to more plausible amounts.

If the solids output from the belt presses were reduced to 18% and the active polymer use were increased to 35 lbs/DT, the overall net present worth for the belt presses will increase to be slightly higher than that for the centrifuges, despite the difference in initial capital costs. In addition, the City currently uses 2 to 3, 2-meter units to process current sludge dewatering needs. The reported number of units as recommended by the belt press manufacturer that is required to meet current sludge dewatering needs is 2, 2-meter units. Two 2-meter BFP is a total of four meters of press. At a solids loading rate of 32 dry tons per day (2,667 lb/hour), the solids loading per meter is equal to 670 lb/hr

per meter. This is on the high side for a BFP receiving a feed sludge with two percent total solids concentration. Using three 2-meter BFPs results in a solids loading of 445 lb/hr per meter. This is a more conservative design and is likely preferred. If a third unit were required for the replacement belt filter presses, the initial capital costs would go up accordingly, further increasing the net present worth of the belt press system over centrifuges.

The location of replacement belt presses could be elevated above a new truck loading station as proposed for centrifuges. Alternately, since the existing dewatering building is already set up for belt presses, the replacement belt presses could be installed in place of existing units. However, the existing building will need considerable refurbishing to repair surfaces and infrastructure damaged by years of exposure to corrosive gasses. The existing belt conveyors should also be replaced with screw conveyors to help contain corrosive gasses and odors. The more enclosed nature of the centrifuge system lessons the impact of corrosive gas release from the dewatering process.

If the City were to re-instate regular use of the sludge drying system, the difference in the cost to evaporate the additional water in a belt press cake over that from a centrifuge will be very significant. This one change in the comparison of the technologies will strongly favor centrifuges.

There is one concern unique to centrifuges as a dewatering option. This is the possibility of pathogen re-growth either instantaneously after dewatering or as a result of prolonged storage of cake. This is discussed in more detail in Section 7.

The City's only prior experience with centrifuge technology has been observing pilot scale systems. The high horsepower, high speed nature of this type of equipment is of some concern to City staff. The decision to stay with belt filter presses may be an attractive option from a familiarity standpoint. Concerns for either technology may be alleviated by City staff contacting end users of enhanced belt presses and centrifuges recently installed.

Factors that cannot be easily quantified also play a major role in the selection process. Centrifuges offer the advantages of containment of corrosive gases thereby reducing odor and corrosion concerns as compared with BFPs. However, the City staff is more familiar with BFPs and there is a reduced concern regarding pathogen reactivation and regrowth.

Selection of the most advantageous alternative is therefore more than just an economic decision. To best qualify and quantify the decision, a weighted matrix system was developed to allow City staff to not only rank each alternative by category, but also to assign a weight to each category in proportion to its importance. Decision categories, weight factors, and rankings were assigned as noted in Table 5.6.

Table 5.6
Ranking of Alternatives

Decision Category	Weight %	Existing BFP	HSC	SP	New BFP	RFP
Net Present Worth	35%	1	5	3	5	2
Odor Emissions / Corrosion	5%	1	5	5	2	5
Foot Print	5%	3	5	1	3	4
Operational Ease	20%	1	3	5	2	4
Maintenance Ease	25%	1	3	5	2	4
Pathogen Regrowth	5%	5	1	5	5	5
Compatability with Future Technologies	5%	1	5	1	1	1
Total Score	100%	1.3	3.9	3.9	3.2	3.3

Scoring is based on the following formula:

Sum of (Weight of Category) x (Score of Category)

A value of “0” is least beneficial and a value of “5” is most beneficial. The highest possible score is 5.00 and the lowest possible score is 0.00. The highest total score indicates the most beneficial option.

Based on the weighted scoring as depicted in Table 5.6, centrifuges and screw presses are the most beneficial option. It is our recommendation that the City pursue centrifuges to replace the existing belt filter press system. Centrifuges are recommended over screw presses due to the potential future use of the heat drying process or other potential future processes such as thermal hydrolysis. The increase in total cake solids content with the centrifuge versus the screw press will greatly reduce operating costs of the dryer. Though the reported information from the enhanced belt filter press pilot test led to a

more favorable net present worth for the belt press option, our reasons for recommending centrifuges include:

- Uncertainties in the pilot testing conditions may have contributed to overly aggressive results for belt presses
- A degree of skepticism in reported values for enhanced belt press operation exists based on past historical performance of belt presses
- Enclosed nature of centrifuges should decrease the amount of corrosion experienced within the dewatering facilities
- Possibility of needing to return to sludge drying greatly increases the favorability of a centrifuge system
- Concerns over pathogen reqrowth with use of centrifuges is low and there may be means to mitigate this condition if it arises

Section 6.0
Update of Biosolids Processing Assessment Report

6.1 Recommended Actions

The recommended improvements to the HFCAWTP biosolids facilities were previously divided into near term and long term projects. The dewatering facility was a near term project. It is recommended that the City install a new dewatering system based on the use of centrifuges, and to continue to dispose of biosolids through Class B land application due to the significant cost savings as compared with other disposal options. Short interruptions in availability of land application sites can be handled by one repaired train of the heat drying system. Figure 6-1 shows site plans and sections of the recommended improvements.

The near term capital improvement projects listed in the BPAR are revised as listed in Table 6.1. A breakdown of the capital cost estimate for the centrifuge dewatering system and truck loading station is presented in **Appendix D**. All costs presented in this report are based on 2013 dollars and have an accuracy of plus fifty percent (+50%) to minus thirty percent (-30%) of the actual costs based upon a feasibility level of engineering detail or an order-of-magnitude estimate as defined by the American Association of Cost Engineers.

41077-001R2

FIGURE 6-1

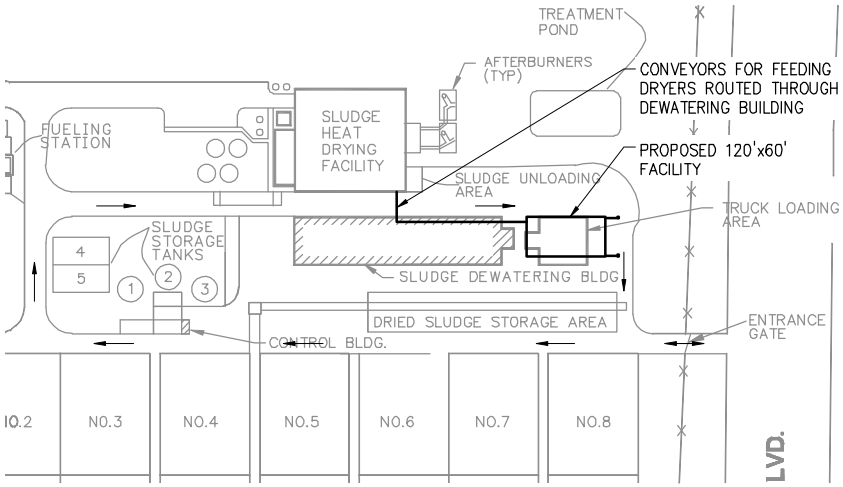

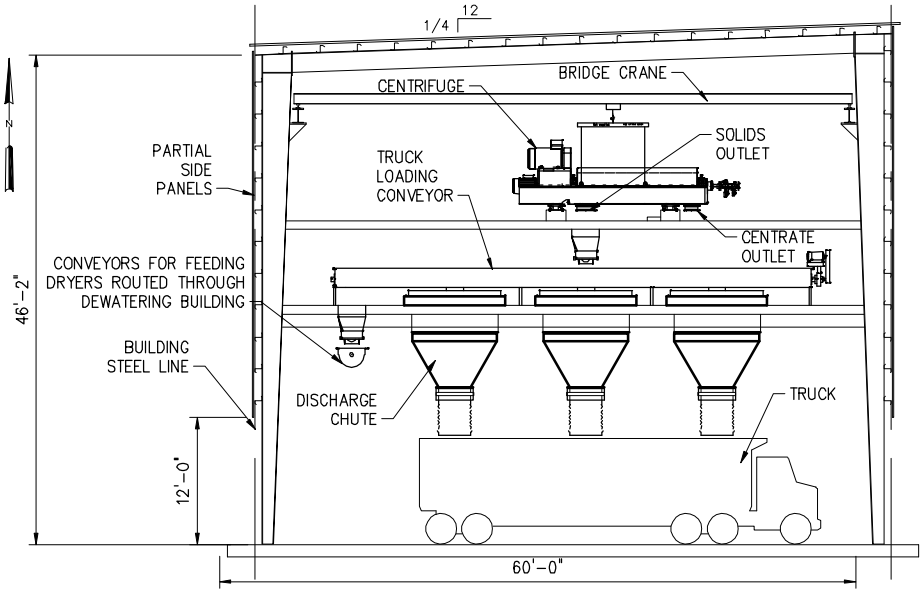

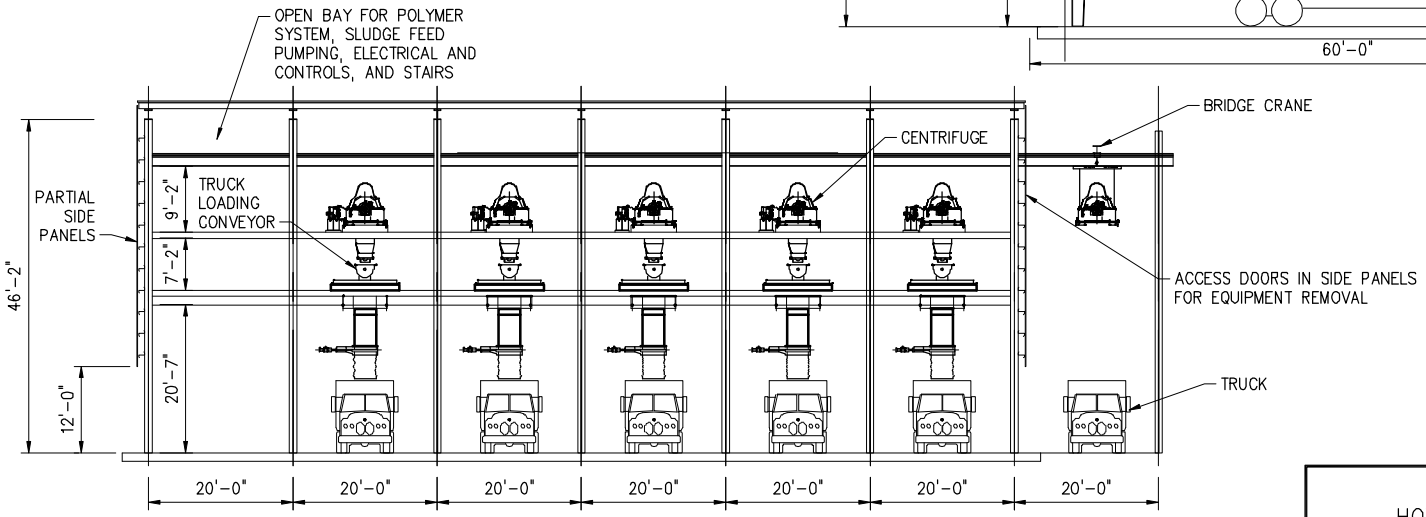

CITY OF TAMPA
HOWARD F. CURREN AWTP

PROPOSED DEWATERING FACILITY

HAZEN AND SAWYER
Environmental Engineers & Scientists

20130820 10:09A C:\41077-001-TPA\Drawings\Figures\Figures.dwg By:SZAGURSKI Last Saved By: szogurski

Table 6.1
Recommended Dewatering System Capital Improvement Projects

Project	Fiscal Year	Opinion of Costs
Perform pilot testing of polymer feed systems to verify design parameters to optimize polymer efficiency	2013	$5,000
Engineering design and permitting of all dewatering system improvements	2014 - 2015	$1,500,000
<u>Replace Sludge Feed Pumps and Grinders</u> • Replace existing sludge feed pumps with two new pumps (one dedicated to each centrifuge) • Replace grinders <u>Replace Polymer Feed System</u> • Replace existing feed units with two new feed units (one dedicated to each centrifuge) <u>New Centrifuge Dewatering and Truck Loading Station</u> • Construct new elevated truck loading station with sufficient space for future expansion, covered roof, partially open sides, metal frame, corrosion resistant materials for roof and siding, three levels (truck weighing, distribution conveyors, and centrifuge) • Install two centrifuges with a minimum 16 dry ton per day per centrifuge capacity (2 duty, no backup) on the upper level, with a dedicated, forward/reverse distributing conveyor on the middle level to distribute dewatered cake uniformly in each truck in three individual truck loading bays. • Install platforms and access stairs for operation and maintenance of centrifuges and conveyors • Install a bridge crane above the centrifuges to facilitate maintenance • Install feed piping from the sludge feed pumps and polymer feed system to the centrifuges	2015 - 2016	$7,000,000
• Install 3 additional centrifuges to meet the plant capacity biosolids production without utilization of the existing belt filter presses • Replace 3 additional sludge feed pumps • Install 3 additional polymer feed units	2016 - 2018	$4,900,000
Demolish existing biosolids dewatering building	2018 – 2020	$500,000

41077-001R2

Section 7.0
Pathogen Reactivation and Regrowth

7.1 Potential Concerns

Pathogen reactivation or regrowth is a condition in which residuals that have been treated to Class A or B standards have an increase in the concentration of indicator organisms to a level higher than the standard following the dewatering process. The standard for Class A is 1,000 Most Probable Number per gram of total dry solids (MPN/g dry solids), and the Class B standard is 2,000,000 MPN/g dry solids. Many studies have been conducted to evaluate the potential for pathogen reactivation and regrowth following a dewatering process. The potential for this phenonmenon appears to be highest when municipal biosolids are processed with anaerobic digestion followed by centrifuge dewatering. Many theories have been developed through these studies to explain the cause of the pathogen increase. **Appendix E** is a report prepared by Hazen and Sawyer regarding the state of knowledge related to this topic as of January 2010. The report discusses two types of reqrowth, an instantaneous regrowth immediately following dewatering, and regrowth that occurs as a result of long term storage.

Since centrifuge dewatering is recommended for the HFCAWTP and the facility is currently achieving Class B through anaerobic digestion, it is important that the City be aware of this potential issue. The dewatered cake produced by the centrifuge pilot units was tested in the laboratory for immediate reqrowth potential. No potential was observed. The dewatered cake was not tested for regrowth potential from long term storage of cake as the City currently hauls away dewatered cake as it is produced.

If pathogen reactivation and/or regrowth is experienced at the HFCAWTP, there are potential solutions. These include further treatment of the biosolids in the heat drying facility or treating the biosolids in another manner to inactivate the pathogens. One study has shown that the application of a small sodium hypochlorite solution on a Class A treated dewatered cake reduced the pathogen concentration to below the standard for Class B biosolids (Higgins et al., 2008).

7.2 References

Higgins, M.J., Chen Y-C., Hendricksen, D., Murthy, S.N. (2008) Evaluation of Bacterial Pathogen and Indicator Densities After Dewatering of Anaerobically Digested Biosolids Phase II and III – Final Report. Water Environment Research Foundation Report No 04-CTS-3T, Alexandria, VA.

APPENDIX A
EXAMPLE RFQ

HAZEN AND SAWYER
Environmental Engineers & Scientists

CITY OF TAMPA

Bob Buckhorn, Mayor **Purchasing Department**

Gregory K. Spearman, CPPO
Purchasing Director

January 10, 2013

REQUEST FOR QUALIFICATIONS (RFQ)
FOR
CENTRIFUGE BIOSOLIDS DEWATERING PILOT TESTING AT THE HOWARD F. CURREN AWTP

Qualifications for **CENTRIFUGE BIOSOLIDS DEWATERING PILOT TESTING AT THE HOWARD F. CURREN AWTP RFQ #72013113** will be received by the Director of Purchasing, City of Tampa, until **5:00 PM, JANUARY 31, 2013.**

Attached are important instructions and specifications regarding responses to this Request for Qualifications. Failure to follow these instructions could result in Respondent disqualification.

All questions on this Request for Qualifications must be addressed in writing to: Ivette Rosario, CPPB, FCCM, Sr. Procurement Analyst via email at Ivette.Rosario@tampagov.net. Questions will be accepted up until **January 24, 2013**. Questions received after January 24, 2013 will not be addressed by the City.

Submission of responses by mail, hand delivery or express mail must be in a sealed envelope with the Respondent's name and return address indicated. **Type or print the RFQ Number and RFQ Title on the carrier envelope.** Address the envelope as follows:

Purchasing Department
Tampa Municipal Office Building, 2nd Floor
306 E. Jackson Street
Tampa, Florida 33602

(This address is appropriate for mailing, hand delivery and express mail.)

The Tampa Municipal Office Building is a controlled access building and all visitors are required to obtain a Visitor's Pass prior to visiting the Purchasing Department.

Responses may be submitted electronically via the Internet as an attachment to an email addressed to BidControl@Tampagov.net. The subject line of the email should include the RFQ number.

Responses shall be accepted no later than the date specified on the **REQUEST FOR QUALIFICATION**. The RFQ Opening shall be thereafter and open to the Public. All responses received after that time shall be rejected. Responses by telegram, telephone or transmitted by facsimile (FAX) machine are not acceptable. No response may be withdrawn or modified after the opening of date.

Verification of the City's receipt of a response submitted by email is the sender's responsibility. Failure of the City to receive such response by the date specified on the Request for Qualifications will result in non-consideration.

TABLE OF CONTENTS

SECTION I.	SCOPE OF SERVICES
SECTION II.	GENERAL CONDITIONS
SECTION III.	BIDDERS AFFIRMATION AND QUALIFICATION SIGNATURE FORMS
SECTION IV.	SUB-CONTRACTING FORMS
ATTACHMENT A.	RFQ SUBMITTAL CHECK LIST
ATTACHMENT B.	FEE SCHEDULE

SECTION I. SCOPE OF SERVICES

1. INTRODUCTION

The City of Tampa is seeking responses from qualified Bidder(s) for the provision of Centrifuge Biosolids Dewatering Pilot Testing at the Howard F. Curren AWTP RFQ #72013113 for the Wastewater Department. The purpose of this Request for Qualifications (RFQ) is to initiate a process for the City to procure centrifuge biosolids dewatering pilot testing services. The City reserves the right to award this RFQ to multiple companies to provide the testing for centrifuge dewatering pilot testing services based on the submittals received. By utilizing multiple companies the City can't guarantee that a company will be utilized or to the extent the company will be used during the term of the award.

2. BACKGROUND

The City of Tampa Waste Water Department owns and operates the Howard F. Curren Advanced Wastewater Treatment Plant. The HFCAWTP is currently permitted for 96 million gallons per day (mgd) average daily flow (ADF) and operates with ADF of approximately 56 MGD. The current anaerobically digested sludge production rate to the dewatering and downstream solids handling process is approximately 380,000 gallons per day (gpd) at a total solids concentration of 2% for an average daily mass feed rate of 63,000 dry pounds per day.

The biosolids processing portion of the plant downstream of anaerobic stabilization consists of belt filter press (BFP) dewatering, and rotary drum drying facilities located in adjacent structures at the treatment facility.

The belt filter press dewatering facility consists of eight (8) 2.0 meter width belt filter presses with a design hydraulic capacity of up to 140 gallons per minute (gpm) per machine at a feed solids concentration of approximately 2.0% total solids. The dewatering facility also includes all associated ancillary equipment for sludge feed pumping, polymer conditioning, and dewatered cake conveyance. Under current sludge production rates typically only two or three of the installed BFP units are required to meet daily production demands. The belt filter presses typically produce a dewatered cake with a solids concentration in the 15% to 17% total solids range.

Currently, the City is disposing of all of their biosolids via Class B land application following dewatering. Ultimate biosolids disposal costs are directly related to the amount of water mass that must be handled, transported, or in the case of thermal drying evaporated. Therefore, reductions in sludge water content (i.e., increased dewatered cake solids content) will beneficially impact ultimate management operating costs. In order to objectively assess the various options for improving dewatered cake solids content, the City is pursuing a multi-pathway process which involves on-site pilot testing and process optimization in order to quantify operational advantages of individual or aggregated opportunities.

3. SERVICE REQUIREMENTS

The City is soliciting a proposal from qualified bidder(s) interested in providing centrifuge biosolids dewatering pilot testing equipment and services for the City's HFCAWTP as described in this Scope of Services. The City shall require the Awardee, at their own expense, to supply the following equipment and labor and perform the following tasks.

3.1 CENTRIFUGE EQUIPMENT. The Awardee shall provide pilot scale centrifuge dewatering equipment with a capacity of at least 500 lbs/hr.

3.2 CENTRIFUGE EQUIPMENT APPURTENANCES. The Awardee shall provide appurtenances for the centrifuge including sludge feed pump; calibrated sludge feed, polymer, and washwater flow meters and totalizers (or ability to accurately and reliably calculate); power meter/recorder; connection hoses and cords; and controls.

3.3 DELIVERY AND SETUP. The Awardee shall deliver, setup, and provide connections of the equipment in location noted on the drawing included in the appendix of the included Dewatering and Polymer Activation Equipment Pilot Testing Protocol. The Awardee shall conduct all services in the span of a five day period (Monday through Friday). The Awardee shall be allowed to deliver equipment and make connections during the week prior to testing if desired in lieu of the first day of the test week (Monday). The City shall provide a testing protocol and shall assist with sample collection. The Awardee shall conduct all services concurrently with pilot dewatering equipment of other technologies.

3.4 POLYMER. The Awardee shall provide all polymer necessary for the entirety of the pilot testing, including the make and quantity as needed for optimal performance of the equipment.

3.5 PROCESSING. The Awardee shall be **solely** responsible for providing a processing technician to conduct setup (including all piping and electrical connections), calibration, sampling, and testing services to establish operating parameters as described below. Pilot test equipment shall be setup on the first day of the test week (Monday), including any initial jar testing to determine appropriate polymer type and dosage. Pilot test equipment shall be operated for four days, Tuesday through Friday, for a minimum of six hours. One hour of setup and shutdown time shall be allotted each test day. Test samples shall be taken of the feed sludge, centrate, and dewatered cake once the pilot unit has reached an acceptable steady state for producing optimal dewatered cake. At a minimum, six (6) samples shall be taken for each test run (one per hour) for each of the four test days (or for each run of the centrifuge at different operating conditions as decided by the operating technician). Technician shall deliver samples to the City laboratory on site. Additional samples may be collected by the manufacturer for their own testing if desired. Parameters for test runs shall record the following:

- Flow rate of sludge to pilot unit (gpm)
- Average polymer usage (gpm) and (lb/dry ton) based on the recorded polymer used divided by the calculated dry tons of solids processed
- Polymer cost ($/lb) of selected polymer
- Activity of emulsion polymer (%)
- Dilution water used (gpm)
- Electrical power consumption (kWh/dry ton) based on total power used by the centrifuge divided by the calculated dry tons of solids processed
- Dewatered cake solids content (%) as measured by City Laboratory
- Solids capture efficiency (TS, %) based on dry tons of solids in dewatered cake divided by calculated dry tons of solids processed
  - Solids Capture Efficiency = C (F-E) / F (C-E) x 100
    - C = Cake Solids (% Total Solids)
    - F = Feed Solids (% Suspended Solids)
    - E = Centrate Solids (% Suspended Solids)
- Total and volatile suspended solids of feed sludge (mg/L) as measured by City Laboratory
- Total suspended solids content of centrate (mg/L) as measured by City Laboratory
- Chemical oxygen demand in centrate (mg/l) as measured by City Laboratory
- Total nitrogen concentration in centrate (mg/l) as measured by City Laboratory
- Total phosphorous concentration in centrate (mg/l) as measured by City Laboratory
- Washwater quantity (gal/dry ton) based on total washwater used divided by the calculated dry tons of solids processed
- Fecal coliform density of sludge feed, MPN/ dry gram biosolids (tested on Tuesday and Wednesday only)
- Fecal coliform density of dewatered cake, MPN/ dry gram biosolids (day of test run)
- Fecal coliform density of dewatered cake, MPN/ dry gram biosolids (24 hours after day of test run)
- Fecal coliform density of dewatered cake, MPN/ dry gram biosolids (48 hours after day of test run).

3.6 SITE CLEANUP. The Awardee shall remove all equipment and connections to the City's facilities and cleanup the site to pre-testing conditions on the Friday of the conclusion of testing.

3.7 SUMMARY REPORT. The Awardee shall develop and submit a summary report within six weeks after the pilot test sampling results have been published. The summary report shall include a review of the test procedures and data collected, technical data to provide sizing (e.g., scale-up calculations), and budgetary pricing for equipment recommended for full scale operation at the HFCAWTF (processing up to 32 dry tons / day) along with information and backup documentation for determining the following operating parameters:

- Estimated maintenance hours per hour of operation
- Suggested preventative maintenance hours per hour of operation
- Suggested operator hours per hours of operation
- Total connected horsepower
- Daily washwater requirement
- Dimensions, weights, and structural design forces.

3.8 COMMUNICATION. The Awardee shall provide 24/7 day a week contact name(s) and telephone/cellular phone numbers to the Department's Designee at the time of award for the processing technician.

3.9 LAWS, PERMITS AND LICENSES. The Awardee shall comply with all Federal EPA Regulations and all other agencies' requirements that are in force. The Awardee shall be required to comply with all City ordinances and regulations. The Awardee shall at all times comply with all ordinances, rules and regulations of Hillsborough County or any other Counties, if applicable, and any statutes, rules and regulations issued by the State of Florida, Department of Environmental Protection Agency or the United States. The Awardee and any sub-contractor shall remain in compliance with all required permits and licenses. Permits and Certification may be required by the City prior to award.

3.10 CITY SUPPLIED COMPONENTS. The City shall supply the following at the locations shown on the attached drawing.

- 4-inch sludge feed cam lock connection
- Centrate drain trough
- 2-inch non-potable water supply cam lock connection
- Electrical generator of 75 kW or larger, 480V, 60Hz
- Level asphalt parking area of 60 ft. by 10 ft.
- Dumpsters for storing dewatered cake and equipment (operated by City staff) to transport dumpsters for disposal of cake
- Containers for collecting samples and laboratory testing of collected samples
- 2% blend of 60% primary / 40% secondary, anaerobically digested sludge

4. QUALIFICATION REQUIREMENTS

4.1 The Awardee shall be able to provide the required services at a total cost of no more than $5,000.00.

4.2 The Awardee shall be able to provide the services during a continual five day (Monday through Friday) period between February 25, 2013 and April 19, 2013.

4.3 The Awardee's equipment shall fit within the space provided by the City, and shall be capable of connecting the City's facilities as described herein.

4.4 The Awardee shall have at least five installations of similar equipment in operation for at least three years at municipal wastewater treatment plants with capacities greater than 10 mgd.

4.5 The Awardee shall have all licenses, permits and certifications required by all applicable law for the operation of the equipment.

4.6 Insurance Requirements. During the life of the award the Respondent shall provide, pay for, and maintain insurance with companies authorized to do business in Florida, with an A.M. Best rating of B+ (or better) Class VI (or higher), or otherwise be acceptable to the City if not rated by A.M. Best. All insurance shall be from responsible companies duly authorized to do business in the State of Florida. All liability policies shall provide that the City is an additional insured as to the operations of the Respondent under the award including the Additional Insured endorsement, the Waiver of Subrogation endorsement, and the Severability of Interest Provision. In lieu of the additional named insured requirement, if the Respondent's company has a declared existing policy which precludes it from including additional insureds, the City may permit the Respondent to purchase an Owners and Respondents Protective Liability policy. Such policy shall be written in the name of the City at the same limit as is required for General Liability coverage. The policy shall be evidenced on an insurance binder which must be effective from the date of issue until such time as a policy is in existence and shall be submitted to the City in the manner described below as applicable to certificates of insurance. The insurance coverages, limits, and endorsements required must be evidenced by a properly executed Acord 25 Certificate of Insurance form. Each Certificate must be manually signed by the Authorized Representative of the insurance company shown in the Certificate with proof that he/she is an authorized representative thereof. Thirty days' written notice must be given to the City of any cancellation, intent not to renew, or reduction in the policy coverages, except in the application of the aggregate liability limits provisions. Should any aggregate limit of liability coverage be reduced, it shall be immediately increased back to the limit required by the award. The insurance coverages required herein are to be primary to any insurance carried by the City or any self-insurance program thereof.

The City may waive any or all of these requirements based on the specific nature of goods or services to be provided under the award.

The Awardee(s) shall be required to provide and pay for the following:

a. **Commercial General Liability Insurance** shall be provided on the most current Insurance Services Office (ISO) form or its equivalent. The amount of Commercial General Liability insurance shall not be less than the $1,000,000 per occurrence and a $2,000,000 general aggregate.

b. **Worker's Compensation and Employer's Liability Insurance** shall be provided for all employees engaged in the work under the award, in accordance with the laws of the State of Florida. The amount of the Employer's Liability Insurance shall not be less than **Worker's Compensation**: Florida Statutory Requirements and **Employer's Liability** $500,000 bodily injury by accident and each accident, bodily injury by disease policy limit, and bodily injury by disease each employee.

These amounts apply except as otherwise exempt by Florida State Statute.

c. **Excess Liability Insurance (Umbrella Policy)** may compensate for a deficiency in general liability, automobile, or worker's compensation insurance coverage limits.

Note: The City of Tampa uses Ebix BPO to manage its insurance certificates and related documentation. Upon insurance expiration, Ebix BPO staff will notify the Awardee to request updated insurance certificate(s) and endorsement(s).

5. QUALIFICATION SUBMITTALS

The following must be submitted in response to the RFQ.

5.1 General Information. The Awardee shall be specific and shall submit in order the following information:

- Total lump sum cost to perform these scope of services
- Window of dates that the equipment is available for pilot testing services
- Drawings of proposed equipment showing dimensions and required connections

5.2 References. The Awardee shall provide a list of installations within the United States to verify the supplier/manufacturer can (at a minimum) meet the qualification requirements described in Section 4.4. The installation list shall contain the following information.

- Municipality name
- Contact name, phone number, and email address
- Location
- Year equipment placed into operation
- Plant capacity (mgd)
- Total solids loading capacity of equipment installed (dry pounds/hour)
- Number of units installed.

5.3 Request for Sample Prior to Pilot Testing. The Awardee may request a sample of the biosolids dewatering feed from the HFCAWTP by sending pre-paid postage to the following address along with the mailing address for shipment of the sample and a contact phone number.

City of Tampa Wastewater Department
Attention: Timothy Ware
2700 Maritime Boulevard
Tampa, Florida 33605

5.4 Award Litigation/Legal Proceedings. The Awardee shall identify any pending lawsuits, past litigation relevant to subject matter of the RFQ. Provide a statement of any litigation or pending lawsuits that have been filed against the Company in the last five years.

If an action has been filed, state and describe the litigation or lawsuit filed, and identify the court or agency before which the action was instituted, the applicable case or file number, and the status or disposition for such reported action. If no litigation or lawsuit has been filed against the company, provide a statement to that effect. For Respondents having a joint venture or utilizing Subcontractors, submit the requested information for each member of the joint venture or Subcontractor.

5.5 Insurance Requirement. Provide a copy of Awardee's Insurance Certificate listing the City of Tampa as an additional insured for General Liability Insurance and Excess Liability Insurance. Certificate Holder shall be:

City of Tampa
306 E. Jackson
Tampa, Florida 33602

End of Section I

SECTION II. GENERAL CONDITIONS

1. GENERAL INFORMATION

1.1 Submittal Due Date. Sealed qualifications (one original, two complete copies) shall be received no later than the date and time indicated on page one of this document. RFQ packages shall not be accepted after this time.

The City is not required to seek qualifications for this service; it has chosen to do so in its best interest. In so doing, however, the City is not bound to award to the lowest monetary Respondent. The City reserves the right to seek new qualifications when such is reasonably in the best interest of the City.

1.2 Addendum and Amendment to RFQ. If it becomes necessary to revise or amend any part of this RFQ, the City shall issue a written Addendum to all prospective Bidders.

It shall be the responsibility of the Bidder to contact the City prior to submitting their RFQ to ascertain if any addenda have been issued, to obtain all such addenda, and to return the executed addenda with the qualification package.

1.3 Florida Public Records Law. In accordance with Chapter 119 of the Florida Statutes, and, except as may be provided by other applicable State and Federal Laws, Awardee shall be aware that the RFQ and the responses thereto are in the public domain and are available for public inspection. The Awardee is requested, however, to identify specifically any information contained in their responses which they consider confidential and/or proprietary and which they believe to be exempt from disclosure, citing specifically the applicable exempting law. All responses received to this RFQ will become the property of the City of Tampa and will not be returned. In the event of an award, all documentation produced as part of the RFQ shall become the exclusive property of the City.

1.4 City Of Tampa Ethics Code. The Awardee shall comply with all applicable governmental and city rules and regulations including the City's Ethics Code which is available on the City's Website. (City of Tampa Code, Chapter 2, Article VIII. - Section 2-522)

Moreover, each Bidder responding to this Request for Qualification acknowledges and understands that the City's Charter and Ethics Code prohibit any City employee from receiving any substantial benefit or profit out of any Award or obligation entered into with the City, or from having any direct or indirect financial interest in effecting any such Award or obligation. The Awardee shall ensure that no City employee receives any such benefit or interest as a result of the award of this Invitation to Bid, Request for Proposal or Request for Qualifications (City of Tampa Code, Chapter 2, Article VIII. - Section 2-514(d))

Please note that the City's Ethics Code may be accessed on the Internet by utilizing the web link below: **http://www.tampagov.net/appl_Message_Center/external.asp?strServiceID=246**

Tampa's municipal codes are published online by the Municipal Code Corporation.

Printed copies of the Ethics Code can be obtained from the City Clerk's Office for a fee of $0.15 cents a page.

1.5 Hold Harmless. The Awardee shall agree to release, indemnify and hold harmless the City of Tampa from and against any and all liabilities, claims, suits, damages, charges or expenses (including attorneys' fees, whether at trial or appeal) which the City may suffer, sustain, incur or in any way be subjected to by reason of or as a result of any act, negligence or omission on the part of the Awardee, its agents or employees, in the execution or performance of the obligations assumed under, or incidental to, the Award into which the Bidder and the City will enter, except when caused solely by the fault, failure or negligence of the City, its agents or employees.

1.6 Laws, Codes and Ordinances. The Awardee shall comply with the applicable requirements of Federal and state laws, all Codes and Ordinances of the City of Tampa as amended from time to time and any applicable professional regulations.

1.7 Incurred Expenses. The City is not responsible for any expenses which the Bidder may incur in the preparation and submittal of responses requested by this RFQ, including but not limited to, costs associated with travel, accommodations, interviews or presentations.

1.8 RFQ Binding. All Request for Qualifications submitted shall be binding for 120 calendar days following the opening.

1.9 NON-DISCRIMINATION IN CONTRACTING AND EMPLOYMENT

The following provisions are hereby incorporated into any Award executed by or on behalf of the City of Tampa (City).

The Awardee shall comply with the following Statement of Assurance:

During the performance of this Award, the Awardee herein assures the City, that said Awardee is in compliance with Title VII of the 1964 Civil Rights Act, as amended, the Florida Civil Rights Act of 1992, and the City of Tampa Code of Ordinances, Chapter 12, in that the Awardee does not on the grounds of race, color national origin, religion, sex, age, handicap or marital status, discriminate in any form or manner against said Awardee employees or applicants for employment.

The Awardee understands and agrees that this Award is conditioned upon the veracity of this Statement of Assurance, and that violation of this condition shall be considered material breach of this Award. Furthermore, the Awardee herein assures the City that said Awardee will comply with Title VI of the Civil Rights Act of 1964 when federal grant(s) is/are involved. This Statement of Assurance shall be interpreted to include Vietnam-Era Veterans and Disabled Veterans within its protective range of applicability.

The Awardee further acknowledges and agrees to provide the City with all information and documentation that may be requested by the City from time to time regarding the solicitation, selection, treatment and payment of subcontractors, suppliers and vendors in connection with this Award. The Awardee further acknowledges that it must comply with City of Tampa Code of Ordinances, Chapter 26.5, as enacted by Ordinance No. 2008-89."

1.10 EQUAL OPPORTUNITY

The City of Tampa hereby notifies all Bidder's that all eligible businesses, including Small Local Businesses Enterprises (SLBEs) will be afforded a full opportunity to participate in any award made by the City of Tampa pursuant to this present qualification matter and will not be subjected to discrimination on the basis of race, color, sex, or national origin. The City of Tampa prohibits any person involved in City of Tampa contracting and procurement activities, to discriminate on the basis of race, color, religion, sex, national origin, age, or physical handicap.

1.11 Assignment and Sub-Contracting. No Awardee shall assign the award or any rights or obligations there under without the written consent of the City. In the event of such approved Sub-Contracting, the Awardee agrees to provide the City with written documentation relative to the Subcontractor(s) solicited, or that will be employed in this award, including but not limited to submittal of attached Schedule of Sub-Contracting forms, with the proposal response. ("Schedule of All Sub-Contractors/Consultants/Suppliers Solicited" MBD 10 and "Schedule of Sub-Contractors/Consultants/Suppliers to be Utilized" MBD 20).
Subcontractor shall be defined as: a business enterprise, firm, partnership, corporation, consultant or combination thereof having a direct contract with a prime contractor for any portion of the advertised work that is awarded by the City/City's representative.

Supplier shall be defined as: a business enterprise that either directly contracts with a Prime Contractor/Consultant or directly contracts with a Subcontractor under such Prime Contractor/Consultant to provide materials, supplies or equipment in connection with a Contract awarded by the City/City's representative. A Supplier may be a regular dealer, distributor or manufacturer

For additional information contact the Minority Business Development Office at 813/274-5543 or 813/274-5522. http://www.tampagov.net/dept_minority_business_development/

2. QUESTIONS REGARDING SPECIFICATIONS OR RFQ PROCESS

2.1 To ensure fair consideration for all Bidder's, any questions relative to the interpretation of requirements or the RFQ process shall be addressed only to the City's designee, as listed on the cover page of this RFQ.

Additionally, the City prohibits communications initiated by an Bidder with any City official or employee evaluating or considering the qualifications prior to the time an award decision has been made, except as initiated by the appropriate City official or employee in order to obtain information or clarification needed to develop a proper, accurate evaluation of the responses. Communications so initiated by a Bidder may be grounds for disqualifying the Bidder from consideration for award.

3. CONTENT OF SUBMITTALS

3.1 Submittals should be prepared simply and economically, providing a straightforward, concise description of the Bidder's ability to fulfill the requirements of the RFQ. **Failure to follow these instructions could result in your proposal being disqualified.**

It is required that responses be organized and fasten or bound in the following manner and identified with tabs:

- **Title Page.** Type the name of Bidder's company, address, telephone number, name of contact person, date, and the title of the RFQ.
- **Table of Contents.** Include a clear identification of the written material by section and by page number.

- **RFQ Submittal Check List.** Complete and submit Attachment A. for compliance of certain requirements identified in the RFP package.

- **Tab 1. Addenda.** Include a copy of the addendum, or addenda associated with the RFQ, if applicable. Incomplete responses shall not be considered.

- **Tab 2. Response to Request.** Specifically state the Bidder's understanding of the work to be accomplished and make a positive commitment to perform the work in Section I. Scope of Services.

- **Tab 3. Qualification Submittals.** Include all the requirements and/or documentation requested under Section I. Scope of Services, Section 5. Qualifications Submittal.

- **Tab 4. Compensation.** Complete and submit Attachment B. Fee Schedule. Itemize any optional costs separately.

- **Tab 5. Bidder's Affidavit Form.** Complete and have notarized the Bidder's Affidavit form provided in the RFQ Package. This form must be signed by an authorized representative of the firm as defined below.

- **Tab 6. Sub-Contracting Forms.** Under Section II. General Conditions, Section I. General Information, Subsection 1.11 Assignment and Sub-Contracting, the following must be submitted:

  - Schedule of All Sub-Contractors/Consultants/Suppliers Solicited MBD Form 10
  - Schedule of Sub-Contractors/Consultants/Suppliers to be Utilized MBD Form 20

  These forms must be submitted with all proposals. Submittals that do not contain these forms will be deemed "non-responsive"."

- **Tab 7. Qualifications Signature Form.** Complete the Request for Qualifications Signature form provided in the package. This form must be signed by an authorized representative of the company as defined below:

  When Company is a corporation, the president or vice president signing shall set out the corporate name in full beneath which he/she shall sign his/her name and give the title of his/her office. The form shall also bear the seal of the corporation attested by its corporate secretary.

  When the Company is a partnership, the form shall be signed in the name of the partnership by a general partner or other person duly authorized to bind the partnership. The capacity and authority of the person signing shall also be given.

When the Company is an individual or sole proprietorship, the response shall be signed by the individual owner, stating name and style under which the Agency is doing business.

If the Company is doing business under a fictitious name, the Company must submit a copy of Certificate of Registration with the Florida Secretary of State.

When the Company is a joint venture, each joint venturer must sign the form as hereinabove indicated.

Note: The Bidder is to submit one original package marked "original", two complete copies marked "copy" and one electronic version by CD delivered in a sealed envelope/package.

4. EVALUATION OF SUBMITTALS

4.1 Submittals shall be evaluated on the minimum qualifications, experience and for compliance of the requirements in the RFQ. The selection to multiple companies to provide centrifuge biosolids dewatering pilot testing services shall be based on experience, qualifications, price, and the ability-to-perform the services within the required period and shall be **determined solely by the City of Tampa**. The City can't guarantee that a bidder will be utilized or to the extent the Awardee will be used during the term of the award.

4.2 Financial Statements. The City reserves the right to request that Bidder submit their annual financial statements for the last three fiscal years, including company financial statement summaries, certified by a Certified Public Accountant. If the organization has been in business for a period of less than three years, Bidder may be required to submit a detailed business plan in addition to any pertinent information that would allow the City to evaluate the sufficiency of financial resources and the ability of the business to successfully perform the services enumerated in the award. Unless otherwise stated, such requests would be made after the submission of the response and prior to award.

5. AWARD REQUIREMENTS

5.1 Award Term. The period of the award shall be for one week of testing, from the effective date of the award.

5.2 Non-Appropriation of Funds. In the event no funds or insufficient funds are appropriated for expenditures under this award, the City will notify the Company in writing of such occurrence and the award shall terminate without penalty or expense to the City on the last day of the fiscal year in which sufficient funds have been appropriated.

5.3 Addition/Deletion. The City reserves the right to add to or delete any service/item from this RFQ when deemed to be in the best interest of the City.

5.4 Response Prices. All taxes of any kind and character payable on account of the work done and materials furnished under the Award shall be paid by the Awardee and shall be deemed to be included in the response. The laws of the State of Florida provide that sales tax and use taxes are payable by the Awardee upon the tangible personal property incorporated in the work and such taxes shall be paid by the Awardee and shall be deemed to have been included in the response. The City is exempt from all State and Federal sales, use and transportation taxes.

Prices include all royalties and costs arising from patents, trademarks and copyrights in any way involved in the work. Whenever the Awardee is required or desires to use any design, device, material or process covered by letters of patent or copyright, the Awardee shall indemnify and save harmless the City, its officers, agents and employees from any and all claims for infringement by reason of the use of any such patented design, tool, material, equipment or process, to be performed under the award, and shall indemnify the City, its officers, agents, and employees for any costs, including litigation costs and attorneys' fees through the appellate process, expenses and damages which may be incurred by reason of any infringement at any time during the prosecution or after the completion of work.

5.5 Minimum Wage Amendment. The Awardee shall comply with the minimum wage requirements as required in Article X, Section 24, Constitution of the State of Florida as of May 2, 2005.

The rate of wages for all persons employed by the Awardee on the work covered shall not be less than the rate of wages required by the Fair Labor Standards Act (Public Law 104-188) enacted August 20, 1996.

5.6 Convicted Vendor List (Public Entity Crime). A person or affiliate who has been placed on the convicted vendor list following a conviction for a public entity crime may not submit a response on a contract to provide any goods or services to a public entity, may not submit a response on a contract with a public entity for the construction or repair of a public building or public work, may not submit responses on leases of real property to a public entity, may not be awarded or perform work as a contractor, supplier, subcontractor, or consultant under a contract with any public entity, and may not transact business with any public entity in excess of the threshold amount provided in Section 287.017 for Category Two ($10,000.00 and greater) for a period of 36 months from the date of being placed on the convicted vendor list. [See Florida State Statute 287.133 (2)(a)]

End of Section II

SECTION III. BIDDER'S AFFIDAVIT AND QUALIFICATION SIGNATURE FORMS

BIDDER'S AFFIDAVIT

Before me, the undersigned authority who is duly authorized by law to administer oaths and take acknowledgements, personally appeared

_____

AFFIANT'S NAME

Who, after being duly cautioned and sworn (or who is unsworn if that be the case) and being fully aware of the penalties of perjury, does hereby state and declare, on his own behalf or on behalf of a partnership or corporation, whoever or whichever is the Bidder in the matter at hand, as follows:

1. That the Bidder, if an individual, is of lawful age.

2. That if the Bidder is a partnership or a corporation, it has been formed legally; if a Florida corporation, it has filed its Articles of Incorporation with the Florida Secretary of State; if a corporation incorporated under the laws of a state other than Florida, it is duly authorized to do business in the State of Florida.

3. That if the Bidder is using a fictitious name, he/she/it has complied with the Fictitious Name Statute of the State of Florida.

4. That the Bidder has not submitted a rigged Bid, nor engaged in collusive bidding or collusive bidding arrangement or fraudulent bidding, or entered into a conspiracy relative to this bid, with any other person, partnership, or corporation making a bid for the same purpose. The Bidder is aware that "Any understanding between persons where one or more agree not to bid, and any agreement fixing the prices to be bid so that the awarding of any contract is thereby controlled or affected, is in violation of a requirement for competitive bidding and renders a contract let under such circumstances invalid." [See McQuillian, Municipal Corporations, §26.69].

5. That the Bidder is not in arrears to the City of Tampa upon debt or contract and is not a defaulter, as surety or otherwise, upon any obligation to the City.

6. That no officer or employee of the City, either individual or through any firm, corporation or business of which he/she is a stockholder or holds office, shall receive any substantial benefit or profit out of the contract or obligation entered into between the City of Tampa and this Bidder or awarded to this Bidder; nor shall any City officer or employee have any financial interest in assisting the Bidder to obtain, or in any other way effecting, the award of the contract or obligation of this Bidder.

7. That, by submitting this bid, the Bidder certifies that he/she has fully read and understands the bid method and has full knowledge of the scope, nature, and quality of work to be performed or the services to be rendered.

FURTHER BIDDER SAYETH NOT.

Bidder: Complete the applicable Acknowledgement for An Individual Acting In His Own Right, A Partnership or A Corporation, according to your firm type.

FOR AN INDIVIDUAL ACTING IN HIS OWN RIGHT

State of _____
County of _____

The foregoing instrument was acknowledged before me this _____ day of _____ 20__, by _____, who is personally known to me or who has produced identification and who did (did not) take an oath.

_____ _____
Signature of Notary Public Signature of Affiant

Notary Public
State of: _____
My Commission
Expires: _____

_____ _____
Printed, typed or stamped Printed or typed name of Affiant
Commissioned name of notary public

FOR A PARTNERSHIP

State of _____
County of _____

The foregoing instrument was acknowledged before me this ____ day of _____ 20__, by _____, who is a partner on behalf of _____, a partnership. He/She is personally known to me or has produced identification and did (did not) take an oath.

_____ _____
Signature of Notary Public Signature of Affiant

Notary Public
State of: _____
My Commission
Expires: _____

_____ _____
Printed, typed or stamped Printed or typed name of Affiant
Commissioned name of notary public

FOR A CORPORATION

State of _____
County of _____

The foregoing instrument was acknowledged before me this _____ day of_____20_____, by , who is_____
(Title)
of_____
(Corporation Name)
a corporation under the laws of the State of _____, on behalf of the said corporation. He/She is personally known to me or who has produced identification and who did (did not) take an oath.

_____ _____
Signature of Notary Public Signature of Affiant

Notary Public
State of: _____
My Commission
Expires: _____

_____ _____
Printed, typed or stamped Printed or typed name of Affiant
Commissioned name of notary public

QUALIFICATION SIGNATURE FORM
FOR
CENTRIFUGE BIOSOLIDS DEWATERING PILOT TESTING AT THE HOWARD F. CURREN AWTP

In compliance with this RFQ and to all the conditions imposed herein, the undersigned offers and agrees to provide **RFQ #72013113, CENTRIFUGE BIOSOLIDS DEWATERING PILOT TESTING AT THE HOWARD F. CURREN AWTP** in accordance with the attached signed qualifications, or as mutually agreed upon by subsequent negotiation. This completed Qualification Signature form must be submitted with the Company's application and will become a part of any agreement that may be awarded. This Qualification Signature Form must be signed by an authorized representative as defined in **Section II. General Conditions, Subsection 3. Content of Submittals** of this RFQ. **If the Qualification Signature Form is not signed by an authorized representative or submitted with the response, the response is considered non-responsive.**

Please type or print:

Name of Firm: _____

Address: _____

City: _____ State: _____ Zip: _____

Contact Person: _____

Telephone No.: _____ Fax No.: _____ Email: _____

Type Organization: [ ] Individual [ ] Small Business [ ] Non-Profit
[ ]Partnership [ ] Corporation [ ] Joint Venture

Attach copies of all such licenses, permits or certificates issued to the business entity.

Business is licensed, (unless exempt by applicable law) permitted or certified to do business in the State of Florida:

[ ] Yes [ ] No. License # _____

State of FL Corporation ID# (from Sec'y of State): _____

State of FL Fictitious Name Reg.# (from Sec'y of State): _____

Federal I.D. #: _____

Authorized Signature: _____ Date: _____

End of Section III

SECTION IV. SUB-CONTRACTING FORMS AND PAYMENT FORM

City of Tampa – DMI -Schedule of All Sub-(Contractors/Consultants/Suppliers) Solicited

(FORM MBD-10)

Contract No.:13-P-01476 Contract Name: Centrifuge Biosolids Dewatering Pilot Testing RFQ# 72013113

Contractor Name:_____ Address:_____

Federal ID:_____ Phone:_____ Fax:_____ Email:_____

[ ] No Firms were contacted/solicited for this contract.

[ ] No Firms were contacted because:_____

[ ] See attached documents with supplemental information.

NIGP Code General Categories: Buildings = 909, General = 912, Heavy = 913, Trades = 914, Architects = 906, Engineers & Surveyors = 925, Supplier = 912-77

This DMI Schedule Must Be Submitted with the Bid or Proposal (Do Not Modify This Form)

S = SLBE W=WMBE Federal ID	Company Name Address Phone & Fax	Type of Ownership (F=Female M=Male) BF BM = African Am. HF HM = Hispanic Am. AF AM = Asian Am. NF NM = Native Am. CF CM = Caucasian	Trade or Services NIGP Code (listed above)	Contact Method L=Letter F=Fax E=Email P=Phone	Quote or Resp. Rec'd Y/N

It is hereby certified that the information provided is an accurate and true account of contacts and solicitations for sub – contracting opportunities on this contract. ***This form must be completed and submitted with the bid or proposal***. Modifying or failing to sign DMI forms may result in Non-Compliance and/or deemed non-responsive.

Signed:_____ Name/Title:_____ Date:_____

MBD 10 rev. 10/01/12

Note: Detailed Instructions for completing this form are on the next page

Instructions for completing The Sub-(Contractors/Consultants/ Suppliers) Solicited Form (Form MBD-10)

This form must be submitted with all bids or proposals. All subcontractors (regardless of ownership or size) solicited and subcontractors from whom unsolicited quotations were received must be included on this form. The instructions that follow correspond to the headings on the form required to be completed. Note: Ability or desire to self-perform all work shall not exempt the prime from Good Faith Efforts when Goal has been established.

- **Contract No.** This is the number assigned by the City of Tampa for the bid or proposal.
- **Contract Name.** This is the name of the contract assigned by the City of Tampa for the bid or proposal.
- **Contractor Name.** The name of your business.
- **Address.** The physical address of your business.
- **Federal ID.** FIN. A number assigned to your business for tax reporting purposes.
- **Phone.** Telephone number to contact business.
- **Fax.** Fax number for business.
- **Email.** Provide email address for electronic correspondence.
- **No Firms were contacted/solicited for this contract.** Checking the box indicates that a pre-determined Subcontract Goal was not set by the City resulting in your business not using subcontractors and will self-perform all work. If during the performance of the contract you employ subcontractors, the City must pre-approve subcontractors. Use of the "Sub-(Contractors/Consultants/Suppliers) Payments" form must be submitted with your invoices. Note: Certified SLBE or WMBE firms bidding as Primes are not exempt from outreach and solicitation of subcontractors.
- **No Firms were contacted because.** Provide brief explanation why no firms were contacted/solicited.
- **See attached documents.** Check box, if after you have completed the DMI Form in its entirety, you are providing any additional documentation relating to the form. All DMI data not submitted on the MBD Form-10 must be in the same format and have all requested data from MBD Form-10 included.

The following instructions are for information of any and all subcontractors solicited.

- **"S" = SLBE, "W" = WMBE.** Enter "**S**" for firms Certified by the City as Small Local Business Enterprises and/or "**W**" for firms Certified by the City as Women/Minority Business Enterprise.
- **Federal ID.** FIN. A number assigned to a business for tax reporting purposes. This information is critical in proper identification of the subcontractor.
- **Company Name, Address, Phone & Fax**. Provide company information for verification of payments.
- **Type of Ownership.** Indicate the Ethnicity and Gender of the owner of the subcontracting business.
- **Trade, Services, or Materials** Indicate the trade, service, or material provided by the subcontractor. NIGP codes are listed at top section of document.
- **Contact Method L=letter, F=fax, E=Email, P=Phone.** Indicate with letter the method of soliciting for bid.
- Q**uote or Resp. (response) Rec'd (received) Y/N**. Indicate "Y" Yes if you received a quotation or if you received a response to your solicitation. Indicate "N" No if you received no response to your solicitation from the subcontractor.

If any additional information is required or you have any questions, you may call the Minority Business Development Office at (813) 274-5522.

City of Tampa – DMI Schedule of Sub-(Contractors/Consultants/Suppliers) to be Utilized

(FORM MBD-20)

Contract No.:13-P-01476 Contract Name: Centrifuge Biosolids Dewatering Pilot Testing RFQ# 72013113

Contractor Name:_____ Address:_____

Federal ID:_____ Phone:_____ Fax:_____ Email:_____

[ ] See attached documents.

[ ] No Subcontracting (of any kind) will be performed on this contract.

NIGP Code General Categories: Buildings = 909, General = 912, Heavy = 913, Trades = 914, Architects = 906, Engineers & Surveyors = 925, Supplier = 912-77

This DMI Schedule Must Be Submitted with the Bid or Proposal (Do Not Modify This Form)

Enter "S" for firms Certified as Small Local Business Enterprises, "W" for firms Certified as Women/Minority Business Enterprise

S = SLBE W=WMBE Federal ID	Company Name Address Phone & Fax	Type of Ownership (F=Female M=Male) BF BM = African Am. HF HM = Hispanic Am. AF AM = Asian Am. NF NM = Native Am. CF CM = Caucasian	Trade, Services, or Materials NIGP Code Listed above	Amount of Quote. Letter of Intent if available.	Percent of Scope/Contract %

Total Subcontract/Supplier Utilization $_____

Total SLBE Utilization $ _____

Total WMBE Utilization $ _____

Percent SLBE Utilization of Total Bid/Proposal Amt. _____% Percent WMBE Utilization of Total Bid/Proposal Amt. _____%

It is hereby certified that the following information is a true and accurate account of utilization for sub-contracting opportunities on this contract. *This form must be completed and submitted with the bid or proposal*. Modifying or failing to sign DMI forms may result in Non-Compliance and/or deemed non-responsive.

Signed:_____ Name/Title:_____ Date:_____

MBD 20 rev. 10/01/12

Note: Detailed Instructions for completing this form are on the next page.

Instructions for completing The Sub-(Contractors/Consultants/ Suppliers) to be Utilized Form (Form MBD-20)

This form must be submitted with all bids or proposals. All subcontractors projected to be utilized must be included on this form.

- **Contract No.** This is the number assigned by the City of Tampa for the bid or proposal.
- **Contract Name.** This is the name of the contract assigned by the City of Tampa for the bid or proposal.
- **Contractor Name.** The name of your business.
- **Address.** The physical address of your business.
- **Federal ID.** FIN. A number assigned to your business for tax reporting purposes.
- **Phone.** Telephone number to contact business.
- **Fax.** Fax number for business.
- **Email.** Provide email address for electronic correspondence.
- **No Subcontracting (of any kind) will be performed on this contract.** Checking box indicates your business will not use subcontractors when no Subcontract Goal has been set by the City, but will self-perform all work. When subcontractors are utilized during the performance of the contract, the "Sub-(Contractors/Consultants/Suppliers) Payments" form must be submitted with your invoices. Note: Certified SLBE or WMBE firms bidding as Primes are not exempt from outreach and solicitation of subcontractors.
- **See attached documents.** Check if you have provided any additional documentation relating to the utilization of subcontractors.

The following instructions are for information of Any and All subcontractors to be utilized.

- **Federal ID.** FIN. A number assigned to a business for tax reporting purposes. This information is critical in proper identification of the subcontractor.
- **"S" = SLBE, "W" = WMBE.** Enter "**S**" for firms Certified by the City as Small Local Business Enterprises and/or "**W**" for firms Certified by the City as Women/Minority Business Enterprise.
- **Company Name, Address, Phone & Fax**. Provide company information for verification of payments.
- **Type of Ownership.** Indicate the Ethnicity and Gender of the owner of the subcontracting business.
- **Trade, Services, or Materials (NIGP code if Known)** Indicate the trade, service, or material provided by the subcontractor. NIGP codes are available at http:/www.tampagov.net/mbd.
- **Amount of Quote, Letters of Intent** (required for both SLBEs and WMBEs)
- **Percent of Work/Contract.** Indicate the percent of the total contract price the subcontract(s) represent.
- **Total Subcontract/Supplier Utilization.** – Provide total dollar amount of all subcontractors/suppliers projected to be used for the contract. (Dollar amounts may not apply to CCNA proposals.)
- **Total SLBE Utilization.** Provide total dollar amount for all projected SLBE subcontractors/Suppliers used for this contract. (Dollar amounts may not apply to CCNA proposals.)
- **Total WMBE Utilization.** Provide total dollar amount for all projected WMBE subcontractors/Suppliers used for this contract. (Dollar amounts may not apply to CCNA proposals.)
- **Percent SLBE Utilization.** Total amount allocated to SLBEs divided by the total bid amount. (Dollar amounts may not apply to CCNA proposals.)
- **Percent WMBE Utilization.** Total amount allocated to WMBEs divided by the total bid/proposal amount. (Dollar amounts may not apply to CCNA proposals.)

If any additional information is required or you have any questions, you may call the Minority Business Development Office at (813) 274-5522.

City of Tampa – DMI Sub-(Contractors/Consultants/Suppliers) Payments

[ ] Partial [ ] Final

(FORM MBD-30)

Contract No.: 13-P-01476 Contract Name: Centrifuge Biosolids Dewatering Pilot Testing RFQ# 72013113

Contractor Name:_____ Address:_____

Federal ID:_____ Phone:_____ Fax:_____ Email:_____

GC Pay Period:_____Payment Request/Invoice Number:_____

City Department:_____

Total Amount Requested for pay period: $_____ Total Contract Amount (including change orders):$_____

-Type of Ownership - (F=Female M=Male), BF BM = African Am., HF HM = Hispanic Am., AF AM = Asian Am., NF NM = Native Am., CF CM = Caucasian S = SLBE

Type Trade/Work Activity []Sub []Supplier Federal ID	Company Name Address Phone & Fax	Total Sub Contract Or PO Amount	Amount Paid To Date Amount Pending Previously Reported	Amount To Be Paid For This Period Sub Pay Period Ending Date
			$	$
			$	$
			$	$
			$	$
			$	$
			$	$

(Modifying This Form or Failure to Complete and Sign May Result in Non-Compliance)

Certification: I hereby certify that the above information is a true and accurate account of payments to sub – contractors/consultants on this contract.

Signed:_____ Name/Title:_____ Date:_____

DMI form 30 (rev. 10/01/12) **Note: Detailed Instructions for completing this form are on the next page**

Instructions for completing The DMI Sub-(Contractors/Consultants/ Suppliers) Payment Form (Form MBD-30)

This form must be submitted with all invoicing or payment requests where there has been subcontracting rendered for the pay period. If applicable, after payment has been made to the subcontractor, "Waiver and Release of Lien upon Progress Payment", "Affidavit of Contractor in Connection with Final Payment", or an affidavit of payment must be submitted with the amount paid for the pay period. The following will detail what data is required for this form. The instructions that follow correspond to the headings on the form required to be completed. **(Modifying or omitted information from this form my result in non-compliance).**

- **Contract No.** This is the number assigned by the City of Tampa for the bid or proposal.
- **W.O.#** If the report covers a work order number (W.O.#) for the contract, please indicate it in that space.
- **Contract Name.** This is the name of the contract assigned by the City of Tampa for the bid or proposal.
- **Contractor Name.** The name of your business.
- **Address.** The physical address of your business.
- **Federal ID.** A number assigned to a business for tax reporting purposes.
- **Phone.** Telephone number to contact business.
- **Fax.** Fax number for business.
- **Email.** Provide email address for electronic correspondence.
- **Pay Period.** Provide start and finish dates for pay period. (e.g. 05/01/13 – 05/31/13)
- **Payment Request/Invoice Number.** Provide sequence number for payment requests. (ex. Payment one, write 1 in space, payment three, write 3 in space provided.)
- **City Department**. The City of Tampa department to which the contract pertains.
- **Total Amount Requested for pay period.** Provide all dollars you are expecting to receive for the pay period.
- **Total Contract Amount (including change orders).** Provide expected total contract amount. This includes any change orders that may increase or decrease the original contract amount.
- **Signed/Name/Title/Date**. This is your certification that the information provided on the form is accurate.
- **See attached documents.** Check if you have provided any additional documentation relating to the payment data. Located at the bottom middle of the form.
- **Partial Payment.** Check if the payment period is a partial payment, not a final payment. Located at the top right of the form.
- **Final Payment.** Check of this period is the final payment period. Located at the top right of the form.

The following instructions are for information of any and all subcontractors used for the pay period.

- **(Type) of Ownership.** Indicate the Ethnicity and Gender of the owner of the subcontracting business or SLBE.
- **Trade/Work Activity.** Indicate the trade, service, or material provided by the subcontractor.
- **SubContractor/SubConsultant/Supplier.** Please indicate status of firm on this contract.
- **Federal ID.** A number assigned to a business for tax reporting purposes. This information is critical in proper identification of the subcontractor.
- **Company Name, Address, Phone & Fax**. Provide company information for verification of payments.
- **Total Subcontract Amount.** Provide total amount of subcontract for subcontractor including change orders.
- **Amount Paid To Date.** Indicate all dollars paid to date for the subcontractor.
- **Amount Pending, Previously Reported.** Indicate any amount previously reported that payments are pending.
- **Amount To Be Paid for this Period.** Provide dollar amount of dollars requested for the pay period.
- **Sub Pay Period Ending Date.** Provide date for which subcontractor invoiced performed work.

Forms must be signed and dated or will be considered incomplete. The company authorized representative must sign and certify the information is true and accurate. Failure to sign this document or return the document unsigned can be cause for determining a company is in non-compliance of Ordinance 2008-89.

If any additional information is required or you have any questions, you may call the Minority Business Development Office at (813) 274-5522.

City of Tampa
Official Letter of Intent
(Form MBD-40)

A Letter of Intent is required for each SLBE listed on the Schedule of Subcontractors to be Utilized (MBD-20 Form). Letter of Intent must be signed by both the Proposer and SLBE firm.

Proposal/Contract Number:_____

Proposal/Contract Name:_____

A. To be completed by the Proposer

Name of Proposer:_____
Address:_____
Contact Person:_____Title:_____
Telephone:_____ Fax:_____Email:_____

B. To be completed by SLBE

Name of SLBE:_____
Address:_____
Contact Person:_____Title:_____
Telephone:_____ Fax:_____Email:_____

C. Identify the scope of work to be performed or item(s) to be supplied by the SLBE. On unit price bids, identify to which bid line item the SLBE's work scope or supply corresponds:

_____

_____

_____

D. Cost of work to be performed by SLBE:_____

E. Cost of work to be performed by SLBE as a percent of total City contract amount:_____**%**

Proposer certifies that it intends to utilize the SLBE listed above, and that the work described above is accurate. Proposer will provide City with copy of the related subcontract agreement and/or purchase order prior to commencement of the SLBE's work. The SLBE firm certifies that it has agreed to provide such work/supplies for the amount stated above.

Proposer:_____Date:_____
Signature and Title

SLBE Firm:_____ Date:_____
Signature and Title

Rev. 10/30/08 MBD 40 **Note: Detailed Instructions for completing this letter are on the next page**

Official Letter of Intent Instructions
City of Tampa
Equal Business Opportunity Program

The Official Letter of Intent must be submitted to the soliciting department within ten (10) work days of the bid opening, prior to award. Not providing all letters of intent within the prescribed time frame may be cause to delay award or declare the bid to be non-responsive.

Bid/Proposal/Contract Number- Please provide bid/proposal/contract number provided by City of Tampa procuring department.

Bid/Proposal/Contract Name – Please provide bid/proposal/contract name provided by City of Tampa procuring department.

To be Completed by the Bidder/Service Provide – Please provide prime contractor or main bidders detailed company information as indicated.

To be completed by the WMBE/SLBE – Please provide WMBE/SLBE subcontractor detailed company information as indicated.

Bidder is to Identify the scope of work to be performed or item(s) to be supplied by the WMBE/SLBE. On unit price bids identify, which bid line item the WMBE/SLBE's scope of work or supply corresponds – Please provide details of the services or supplies the WMBE/SLBE will provide.

Cost of work to be performed by WMBE/SLBE – Provide agreed upon estimate of work or supplies total price (Unit prices are accepted if specific quantities have yet to be determined).

Bidder/Proposer – Signature of authorized agent for the prime contractor or main bidder with date signed.

WMBE/SLBE firm – Signature of authorized agent for the WMBE/SLBE subcontractor or supplier with date signed.

Contract Confirmation – A copy of the executed subcontract agreement and/or purchase order with the WMBE/SLBE must be filed with the City of Tampa immediately upon execution and/or prior to commencement of work by WMBE/SLBE.

End of section IV

ATTACHMENT A - PROPOSAL SUBMITTAL CHECK LIST
CENTRIFUGE BIOSOLIDS DEWATERING PILOT TESTING AT THE HOWARD F. CURREN AWTP

The Bidder is cautioned to read and become familiar with all sections of the City of Tampa's RFQ package. Failure to do so may result in the submission of an irregular RFQ response by the Bidder resulting in its possible rejection by the City. The following itemized checklist identifies various items that are mandatory requirements in order to accept the Bidder's response to the City's RFQ. No representation is made that the following checklist is a complete guide to every requirement for consideration by the Bidder.

It is the responsibility of the Bidder to complete the Check List, identify the proposal page number and submit in the proposal under Section II. General Conditions, Section 3. Content of Submittal.

MANDATORY REQUIREMENTS	**PAGE NUMBER IN PROPOSAL**
SECTION 5. QUALIFICATION SUBMITTALS	
5.1 General Information	_____
5.2 References	_____
5.3 Request for sample prior to testing	_____
5.4 Award litigation/legal proceedings	_____
5.5 Insurance	_____
SECTION III. BIDDERS AFFIRMATION FORM Form is filled out, executed and notarized.	_____
SECTION III. PROPOSAL SIGNATURE FORM Form is filled out and executed.	_____
SECTION IV. SUB-CONTRACTING FORMS **Form MBD 10 - Solicited** Form is filled out and executed.	_____
Form MBD 20 - Utilized Form is filled out and executed.	_____
Proposal is submitted in the format required under Section II, subsection 3. Content of Submittal.	_____

FEE SCHEDULE FOR
RFQ CENTRIFUGE BIOSOLIDS DEWATERING PILOT TESTING AT THE HOWARD F. CURREN AWT PLANT

Please Print or Type

We the undersigned, as Bidders, hereby declare that we have carefully read this proposal or bid and the provisions, terms and conditions concerning the equipment, materials, supplies or services as called for, and with full knowledge and understanding of the requirements and conditions, do hereby agree to furnish and to deliver as indicated, FOB, City Facility Location, with all transportation charges prepaid, and for the prices quoted thereon as follows.

CENTRIFUGE BIOSOLIDS DEWATERING PILOT TESTING SERVICES $_____

Sub-Contracting Submittals required: Forms MBD-10, MBD-20 must be submitted with the bid/proposal.

Firm Name:_____

Type Organization: [ ] Individual [ ] Small Business [ ] Non-Profit
[ ] Partnership [ ] Corporation [ ] Joint Venture

Business is licensed (unless exempt by applicable law), permitted and certified to do business in the State of Florida:
[ ] Yes [ ] No License #_____

State of Florida Corporation ID # (from Secretary of State):_____

State of Florida Fictitious Name Reg. # (from Secretary of State):_____

Authorized
Representative's Name:_____
Authorized
Representative's Title:_____

Address:_____

City:_____ State:_____ Zip: _____

Telephone No.: _____Fax No.: _____Email:_____

Federal I.D. #:_____ Invoice Terms: NET 30

Minority Business Status: [ ] Black [ ] Hispanic [ ] Woman

Is your business certified as a minority business with any government agency? [ ] Yes [ ] No. If yes, please list below:

Agency Name	Certification Number	Expiration Date

Authorized Signature:_____Date:_____

APPENDIX B
PILOT TEST PERFORMANCE REPORTS

HAZEN AND SAWYER
Environmental Engineers & Scientists

HFCAWTP - Biosolids Dewatering
FKC Screw Press Pilot Testing

GENERAL		OPERATING CONDITIONS					CHARACTERISTICS										
		POLYMER				Wash Water Quantity (gal/DT)	Feed Sludge			Dewatered Cake		Plant Return Flow					
Date	Time of Sampling	Usage (gph)	Usage (lb/DT)	Activity of Emulsion (%)	Dultion Water Used (gpm)		Flow Rate (gpm)	TSS (mg/l)	VSS (%)	Solids Content (%)	Production (dry lbs/hr)	Solids Capture Efficiency (%)	Solids Capture Efficiency (%)	TSS (mg/l)	COD (mg/L)	TN (mg/L)	TP (mg/L)
3/19/2013	9:00 AM	1.00	86.46	46%	1.00	33.70	2.74			18.7	16.55	89.46%	88.53%	2270	664	1,070	28.7
3/19/2013	10:00 AM	0.60	70.27	46%	0.60	45.65	2.23			23.5	21.66	99.79%	99.79%	41.0			
3/19/2013	11:00 AM	0.83	78.54	46%	0.83	29.44	2.69			18	25.70	99.89%	99.89%	21.5			
3/19/2013	12:00 PM	0.67	78.49	46%	0.67	45.89	2.19			13.7	14.55	98.88%	98.90%	228			
3/19/2013	1:00 PM	1.46	77.67	46%	1.45	37.85	4.91			17.9	39.49	97.91%	97.98%	406			
3/19/2013	2:00 PM	0.73	83.4	46%	0.72	35.86	2.31			21.9	19.36	99.70%	99.71%	56.5			
3/20/2013	9:00 AM	0.91	98.85	46%	0.91	38.53	2.59			21.9	20.20	99.82%	99.84%	31.0	2,070	1,090	118.0
3/20/2013	10:00 AM	1.00	89.63	46%	0.99	28.18	2.89	18,040	74.06	18.6	26.61	99.82%	99.83%	35.0			
3/20/2013	11:00 AM	1.74	93.61	46%	1.73	31.1	4.87	17,920	75.89	16.9	39.03	99.64%	99.65%	70.0			
3/20/2013	12:00 PM	0.69	74.34	46%	0.69	31.05	2.43	17,680	75.11	23.9	20.36	99.02%	99.04%	187			
3/20/2013	1:00 PM	0.80	70.68	46%	0.80	32.8	2.95	17,760	75.45	18.7	26.86	98.20%	98.25%	350			
3/20/2013	2:00 PM	1.16	72.59	46%	1.16	24.39	4.27	17,040	75.35	17.3	36.98	95.78%	95.99%	806			
3/21/2013	9:00 AM	0.43	49.34	50%	0.43	41.47	2.55	16,760	73.51	17.5	15.94		99.67%	66	572	1,090	38.6
3/21/2013	10:00 AM	0.59	51.13	50%	0.59	31.25	3.25	17,240	74.71	18.5	26.27		99.55%	90			
3/21/2013	11:00 AM	0.65	49.39	50%	0.65	30.19	3.69	17,280	74.77	17.5	36.95		99.66%	68			
3/21/2013	12:00 PM	0.25	33.45	50%	0.25	37.49	2.13			17.3	15.34		99.72%	56			
3/21/2013	1:00 PM	0.38	37.32	50%	0.38	27.13	2.98	16,880	74.88	17.2	25.67		99.11%	179			
3/21/2013	2:00 PM	0.39	34.32	50%	0.39	41.96	3.21	17,080	73.77	15.1	32.19		99.64%	74			
3/22/2013	8:00 AM	0.31	41.1	50%	0.31	48.07	2.08	18,280	74.4	15.6	14.67		99.62%	78	578	1,150	35.0
3/22/2013	9:00 AM	0.27	37.24	50%	0.27	40.08	1.86	21,000	74.86	17.3	15.66		99.69%	62			
3/22/2013	10:00 AM	0.38	37.36	50%	0.38	41.86	2.66	20,480	76.17	22.8	30.66		99.55%	88			
3/22/2013	11:00 AM	0.38	37.48	50%	0.38	33.6	2.61	20,520	75.05	10.9	21.27		99.68%	69			
3/22/2013	12:00 PM	0.45	40.96	50%	0.44	44.07	2.92	17,680	75.11	14.8	31.56		99.30%	144			
3/22/2013	1:00 PM	0.41	36.59	50%	0.41	42.79	2.92			14.9	30.75		99.05%	196			

HFCAWTP - Biosolids Dewatering
Huber Screw Press Pilot Testing

GENERAL		OPERATING CONDITIONS								CHARACTERISTICS									
		POLYMER						Wash Water Quantity (gal/DT)	Elec. Power Usage (kWh/ DT)	Feed Sludge			Dewatered Cake		Plant Return Flow				
Date	Time of Sampling	Type	Cost ($/lb)	Usage (gph)	Usage (lb/DT)	Activity of Emulsion (%)	Dultion Water Used (gpm)			Flow Rate (gpm)	TSS (mg/l)	VSS (%)	Solids Content (%)	Production (dry lbs/hr)	Solids Capture Efficiency (%)	TSS (mg/l)	COD (mg/L)	TN (mg/L)	TP (mg/L)
3/19/2013	7:30 AM	--	--	--	--	--	--	--	--	--	--	--	15.2	--	--	916	1,060	863	44.6
3/19/2013	9:30 AM	K 290	--	0.52	41.9	46	2.20	0.0011875	0.3	7.80			15.3	95	92.2	2090			
3/19/2013	10:30 AM	K 275	--	0.56	45.2	46	2.30	0.0011875	0.3	7.70			15.5	95	99.2	18.0			
3/19/2013	12:30 PM	K 275	--	0.51	41.3	46	2.20	0.0011875	0.3	7.80			15.7	95	96.2	153			
3/19/2013	1:30 PM	K 275	--	0.44	35.5	46	2.10	0.0011875	0.3	7.90			17.9	95	98.3	32.0			
3/19/2013	2:30 PM	K 275	--	0.44	35.5	46	2.30	0.0011875	0.3	7.70			17.1	95	93.8	187			
3/20/2013	10:00 AM	8818	--	0.52	41.9	46	2.00	0.0011875	0.3	8.00			18.4	95	85.9	602	1,150	1,140	128
3/20/2013	11:00 AM	8818	--	0.56	56.5	46	2.00	0.0011875	0.3	6.00	18,040	74.06	18.0	76	97.7	304			
3/20/2013	12:00 PM	8818	--	0.56	56.5	46	2.00	0.0011875	0.3	6.00	17,920	75.89	20.2	76	97.1	680			
3/20/2013	1:00 PM	8818	--	0.66	53.6	46	2.00	0.0011875	0.3	8.00	17,680	75.11	18.5	95	94.9	652			
3/20/2013	2:00 PM	8818	--	0.68	54.9	46	2.00	0.0011875	0.3	8.00	17,760	75.45	20.5	95	93.9	214			
3/20/2013	3:00 PM	8818	--	0.70	56.8	46	2.00	0.0011875	0.3	8.00	17,040	75.35	19.0	95	95.2	594			
3/21/2013	9:00 AM	K 279	--	0.60	48.4	46	2.30	0.0011875	0.3	7.70	16,760	73.51	20.1	95	94.6	2380	1,900	1,210	57.0
3/21/2013	10:00 AM	K279	--	0.60	48.4	46	2.20	0.0011875	0.3	7.80	17,240	74.71	20.4	95	95.3	828			
3/21/2013	11:00 AM	K279	--	0.62	49.7	46	2.10	0.0011875	0.3	7.90	17,280	74.77	21.7	95	98.3	562			
3/21/2013	12:00 PM	K279	--	0.61	49.1	46	2.50	0.0011875	0.3	7.50			20.8	95	94.3	1640			
3/21/2013	1:00 PM	K279	--	0.61	49.1	46	2.30	0.0011875	0.3	7.70	16,880	74.88	20.8	95	94.6	984			
3/21/2013	1:30 PM	K 279	--	0.62	50.4	46	2.30	0.0011875	0.3	7.70	17,080	73.77	20.5	95	96.3	2210			
3/22/2013	8:00 AM	8818	--	0.64	41.9	46	1.80	0.0011875	0.3	8.20	18,280	74.4	16.8	95	--	304	437	758	21.5
3/22/2013	9:00 AM	8818	--	0.64	43.9	46	2.00	0.0011875	0.3	8.00	21,000	74.86	18.1	95	--	694			
3/22/2013	10:00 AM	8818	--	0.64	68.6	46	2.00	0.0011875	0.3	6.00	20,480	76.17	19.0	76	--	242			
3/22/2013	11:00 AM	8818	--	0.64	91.5	46	2.00	0.0011875	0.3	4.00	20,520	75.05	24.1	57	--	94			
3/22/2013	12:00 PM	8818	--	0.64	91.5	46	2.00	0.0011875	0.3	4.00	17,680	75.11	23.7	57	--	98			
3/22/2013	1:00 PM	8818	--	0.64	91.5	46	2.00	0.0011875	0.3	4.00			20.5	57	--	105			

HFCAWTP - Biosolids Dewatering
Alfa Laval Centrifuge Pilot Testing

GENERAL		OPERATING CONDITIONS						CHARACTERISTICS									
		POLYMER					Elec. Power Usage (kWh/ DT)	Feed Sludge			Dewatered Cake		Plant Return Flow				
Date	Time of Sampling	Type	Usage (gph)	Usage (lb/DT)	Activity of Emulsion (%)	Dultion Water Used (gpm)		Flow Rate (gpm)	TSS (mg/l)	VSS (%)	Solids Content (%)	Production (dry lbs/hr)	Solids Capture Efficiency (%)	TSS (mg/l)	COD (mg/L)	TN (mg/L)	TP (mg/L)
3/19/2013	9:00 AM	Z8849FS	1.9	34.3	40%	5.0	71.82	40			22.8	362	98.9%	220	1,870	854	48
3/19/2013	10:00 AM	C6267	1.7	34.7	40%	4.2	75.77	35			22.5	317	99.6%	72.5			
3/19/2013	11:00 AM	Z8849FS	1.5	31.6	40%	3.9	75.77	35			21.6	317	99.7%	60.5			
3/19/2013	12:00 PM	Z8849FS	1.5	31.6	40%	4.0	82.08	35			22	317	99.7%	64.5			
3/19/2013	1:00 PM	Z8849FS	1.7	31.5	40%	4.6	71.82	40			22.2	362	98.9%	212			
3/19/2013	2:00 PM	Z8849FS	2.1	34.4	40%	6.4	68.75	45			22.4	407	98.2%	363			
3/20/2013	9:00 AM	C6292	1.6	38.6	45%	5.1	75.77	35			21.8	317	99.0%	200	2,820	928	67.5
3/20/2013	10:00 AM	C6292	1.6	38.6	45%	4.8	82.08	35	18,040	74.06	21.9	317	99.0%	195			
3/20/2013	11:00 AM	C6292	1.7	40.3	45%	5.1	82.08	35	17,920	75.89	22.3	317	99.3%	135			
3/20/2013	12:00 PM	C6292	1.9	40.2	45%	5.8	71.82	40	17,680	75.11	22.0	362	96.8%	622			
3/20/2013	1:00 PM	C6292	2.0	40.1	45%	6.1	77.35	40	17,760	75.45	22.3	362	98.3%	328			
3/20/2013	2:00 PM	C6292	2.1	43.5	45%	6.3	71.82	40	17,040	75.35	22.4	362	98.3%	310			
3/21/2013	9:00 AM	Z8819	1.6	36	42%	6.2	75.77	35	16,760	73.51	20.7	317	98.6%	256	862	965	39.4
3/21/2013	10:00 AM	C6292	1.9	43.8	45%	6.9	82.08	35	17,240	74.71	22.3	317	97.8%	407			
3/21/2013	11:00 AM	C6292	2.0	46.6	45%	7.3	82.08	35	17,280	74.77	23.7	317	87.9%	2230			
3/21/2013	12:00 PM	C6292	2.0	46.6	45%	7.5	94.71	35			22.6	317	99.8%	32.0			
3/21/2013	1:00 PM	C6292	2.0	46.6	45%	7.5	69.46	35	16,880	74.88	22.6	317	99.8%	37.0			
3/21/2013	2:00 PM	C6292	2.0	46.6	45%	7.5	88.4	35	17,080	73.77	22.7	317	99.8%	40.0			
3/22/2013	8:00 AM	Z8849FS	1.7	35.8	40%	4.6	82.08	35	18,280	74.4	23.2	317	100.0%	770	663	1,030	27.7
3/22/2013	9:00 AM	Z8849FS	2.0	42.1	40%	5.3	75.77	35	21,000	74.86	10.9	317	100.0%	164			
3/22/2013	10:00 AM	Z8849FS	2.0	42.1	40%	5.2	82.08	35	20,480	76.17	22.1	317	100.0%	268			
3/22/2013	11:00 AM	Z8849FS	2.4	44.8	40%	6.5	71.82	40	20,520	75.05	22.6	362	100.0%	1700			
3/22/2013	12:00 PM	C6267	2.4	44.8	40%	6.4	77.35	40	17,680	75.11	22.5	362	100.0%	952			
3/22/2013	1:00 PM	C6267	3.0	49.1	40%	8.0	58.93	45			21.4	407	100.0%	1060			

HFCAWTP - Biosolids Dewatering
Centrisys Centrifuge Pilot Testing

GENERAL		OPERATING CONDITIONS					CHARACTERISTICS									
		POLYMER					Feed Sludge			Dewatered Cake		Plant Return Flow				
Date	Time of Sampling	Type	Usage (gpm)	Usage (lb/DT)	Activity of Emulsion (%)	Dultion Water Used (gpm)	Flow Rate (gpm)	TSS (mg/l)	VSS (%)	Solids Content (%)	Production (dry lbs/hr)	Solids Capture Efficiency (%)	TSS (mg/l)	COD (mg/L)	TN (mg/L)	TP (mg/L)
3/19/2013	9:00 AM	K148L	0.0491	35.6	46%	10.0	70			20.6	633.2	97.8%	427	1,340	1,210	68.1
3/19/2013	10:00 AM	K148L	0.0537	39.0	46%	10.0	70			21.7	633.6	98.3%	330			
3/19/2013	11:00 AM	K148L	0.0583	42.3	46%	10.0	70			22.4	633.6	98.7%	249			
3/19/2013	12:00 PM	EM 840CT	0.0537	34.7	41%	10.0	70			20.7	633.6	98.5%	306			
3/19/2013	1:00 PM	EM 840CT	0.0538	37.7	41%	10.0	70			22.8	633.6	98.3%	337			
3/19/2013	2:00 PM	EM 840CT	0.0653	42.2	41%	10.0	70			23.9	633.6	99.3%	138			
3/20/2013	9:00 AM	EM 840LOB	0.0514	37.2	42%	10.0	64			20.5	579.3	95.7%	855	647	1,050	42.5
3/20/2013	10:00 AM	EM 840LOB	0.0605	52.1	42%	10.0	64	18,040	74.06	20.0	486.9	98.9%	226			
3/20/2013	11:00 AM	EM 840LOB	0.0527	47.5	42%	12.0	64	17,920	75.89	21.2	468.7	92.0%	1550			
3/20/2013	12:00 PM	EM 840LOB	0.063	49.9	42%	12.0	72	17,680	75.11	21.4	530.2	95.3%	905			
3/20/2013	1:00 PM	EM 840LOB	0.0617	48.7	42%	12.0	72	17,760	75.45	20.7	532.6	98.6%	279			
3/20/2013	2:00 PM	EM 840LOB	0.0617	50.7	42%	12.0	72	17,040	75.35	19.9	511.0	96.5%	643			
3/21/2013	9:00 AM	K290FLX	0.0585	61.5	44%	10.0	60	16,760	73.51	23.4	418.8	98.7%	238	2,830	1,080	69.9
3/21/2013	10:00 AM	K290FLX	0.0543	55.4	44%	10.0	60	17,240	74.71	24.5	430.8	99.6%	71.0			
3/21/2013	11:00 AM	K290FLX	0.0614	62.5	44%	10.0	60	17,280	74.77	23.5	431.8	99.7%	64.4			
3/21/2013	12:00 PM	K295FL	0.0656	58.0	40%	10.0	60			22.5	452.6	99.8%	46.0			
3/21/2013	1:00 PM	K295FL	0.0699	55.2	40%	10.0	70	16,880	74.88	22.2	506.2	97.7%	2030			
3/21/2013	2:00 PM	8819	0.0656	61.5	40%	10.0	60	17,080	73.77	23.0	426.8	97.7%	1240			
3/22/2013	8:00 AM							18,280	74.4	23.2			312	1,830	1,300	226
3/22/2013	9:00 AM	8819	0.0759	61.5	40%	6.0	60	21,000	74.86	23.2	493.4	97.9%	397			
3/22/2013	10:00 AM	8819	0.0759	53.5	40%	6.0	60	20,480	76.17	22.7	566.8	98.2%	175			
3/22/2013	11:00 AM	8819	0.0631	35.2	40%	6.0	70	20,520	75.05	22.1	716.5	98.1%	927			
3/22/2013	12:00 PM	EM 840CT	0.0552	31.5	41%	10.0	70	17,680	75.11	22.7	717.9	98.2%	626			
3/22/2013	1:00 PM	EM 840CT	0.0552	36.6	41%	10.0	70			18.6	618.6	97.8%	690			
3/22/2013	2:00 PM	EM 840CT	0.0472	30.6	41%	10.0	70				633.6	97.9%				

HFCAWTP - Biosolids Dewatering
Prime Solutions Rotary Fan Press Pilot Testing

GENERAL		OPERATING CONDITIONS					CHARACTERISTICS									
		POLYMER					Feed Sludge			Dewatered Cake		Plant Return Flow				
Date	Time of Sampling	Type	Usage (gpm)	Usage (lb/DT)	Activity of Emulsion (%)	Dultion Water Used (gpm)	Flow Rate (gpm)	TSS (mg/l)	VSS (%)	Solids Content (%)	Production (dry lbs/hr)	Solids Capture Efficiency (%)	TSS (mg/l)	COD (mg/L)	TN (mg/L)	TP (mg/L)
3/19/2013	9:00 AM	8848	0.25	32.1	40%	1.10	6			8.80	54.0	98.9%	205	1,350	417	72.4
3/19/2013	10:00 AM	8848	0.7	114.2	40%	2.70	5			13.3	42.5	96.5%	360			
3/19/2013	11:00 AM	8848	0.25	29.1	40%	0.75	7			9.9	59.6	92.9%	472			
3/19/2013	12:00 PM	8848 Ferric	0.31	50.6	40%	1.05	5			8.9	42.5	98.8%	406			
3/19/2013	1:00 PM	8848 Ferric	0.23	41.4	40%	0.90	7			12.8	38.5	98.2%	400			
3/19/2013	2:00 PM	8848	0.23	28.5	40%	0.85	7			15.3	56.0	93.8%	440			
3/20/2013	9:00 AM	279	0.31	41.5	46%	0.95	7			15.8	59.6	98.8%	469	248	225	16.8
3/20/2013	10:00 AM	279	0.4	36.2	46%	1.10	11	18,040	74.06	23.8	88.1	97.5%	605			
3/20/2013	11:00 AM	279	0.5	45.3	46%	1.15	11	17,920	75.89	14.8	88.1	98.8%	53.0			
3/20/2013	12:00 PM	279	0.55	45	46%	1.80	13	17,680	75.11	17.6	97.6	98.7%	529			
3/20/2013	1:00 PM	279	0.58	48.2	46%	1.70	12	17,760	75.45	14.0	96.1	98.8%	109			
3/20/2013	2:00 PM	279	0.58	44.5	46%	1.65	13	17,040	75.35	17.8	104.1	98.8%	311			
3/21/2013	9:00 AM	279	0.72	47.8	46%	2.00	16	16,760	73.51	15.7	120.1	98.7%	240	267	305	19.2
3/21/2013	10:00 AM	279	0.78	51.8	46%	2.55	15	17,240	74.71	17.1	120.1	97.5%	180			
3/21/2013	11:00 AM	279	0.95	47.3	46%	2.85	20	17,280	74.77	14.9	160.1	97.5%	1030			
3/21/2013	12:00 PM	279	0.98	41.3	46%	3.25	21			15.3	189.2	98.9%	239			
3/21/2013	1:00 PM	279	0.54	50.6	46%	1.80	10	16,880	74.88	15.8	85.1	98.8%	182			
3/21/2013	2:00 PM	279	0.54	53.8	46%	1.60	10	17,080	73.77	15.0	80.1	98.8%	694			
3/22/2013	8:00 AM	279	0.65	95.9	46%	2.10	6	18,280	74.4	12.0	54.0	98.9%		463	272	19.2
3/22/2013	9:00 AM	279	0.48	63.8	46%	1.65	6	21,000	74.86	14.7	60.1	99.0%	123			
3/22/2013	10:00 AM	279	0.48	54.7	46%	1.65	7	20,480	76.17	15.4	70.1	98.0%	546			
3/22/2013	11:00 AM	279	0.48	100.7	46%	1.80	4	20,520	75.05	12.6	38.0	89.5%	3680			
3/22/2013	12:00 PM	279	0.28	43.8	46%	0.90	6	17,680	75.11	16.3	51.0	95.3%	1220			
3/22/2013	1:00 PM	279	0.28	49.6	46%	0.85	3			16.2	45.0	95.6%	296			

HFCAWTP - Biosolids Dewatering
Ashbrook Belt Filter Press Pilot Testing

GENERAL			OPERATING CONDITIONS		CHARACTERISTICS									
			POLYMER		Feed Sludge			Dewatered Cake		Plant Return Flow				
Date	Run #	Time of Sampling	Type	Usage (lb/DT)	Flow Rate (gpm)	TSS (mg/l)	VSS (mg/l)	Solids Content (%)	Production (dry lbs/hr)	Solids Capture Efficiency (%)	TSS (mg/l)	COD (mg/L)	TN (mg/L)	TP (mg/L)
6/4/2013	1	8:30 AM	C6266	42.8	23.5	18,440	73.32	22.80	216	99.30	50	352	945	23.56
6/4/2013	1	9:05 AM	C6292	27.7	28.5	19,120	74.9	18.65	272	99.40	50			
6/4/2013	1	10:00 AM	8818	29.7	26.7	19,000	74.32	18.91	254	99.1	74			
6/4/2013	1	10:50 AM	C6266	53.3	38	18,640	73.39	23.03	354	99.3	68			
6/4/2013	1	12:00 PM	C6266	49.6	39	19,120	71.55	22.78	373	99.2	42			
6/4/2013	1	1:45 PM	8818	36.7	36.7	18,800	70.85	21.38	345	98.7	134			
6/4/2013	1	2:30 PM	8818	30.7	38.3	17,520	71.46	19.9	335	99.2	84			
6/4/2013	1	3:15 PM	8818	18.9	45	16,920	70.92	16.53	381	96.9	336			
6/5/2013	2	8:30 AM	C6292	17.8	43.6	19,480	69.2	19.54	423	99.4	66	336	1049	27.65
6/5/2013	2	9:30 AM	C6292	17.7	40	19,480	69.2	19.26	388	99.3	76			
6/5/2013	2	10:15 AM	C6292	23.7	41	18,360	69.28	19.07	375	99.3	58			
6/5/2013	2	11:00 AM	C6292	22.3	54.6	18,680	69.59	20.05	508	99.5	56			
6/5/2013	2	12:30 PM	C6292	21.4	35	19,280	72.61	19.29	336	98.3	184			
6/5/2013	2	1:30 PM	C6292	22.1	36	18,960	72.15	19.35	340	99.1	96			
6/5/2013	2	2:00 PM	C6292	32.6	32.4	18,800	71.06	19.81	305	99.1	84			
6/5/2013	2	2:30 PM	C6266	49.5	41.4	18,240	72.81	25.36	377	99.6	38			
6/5/2013	2	2:45 PM	C6266	47.2	41.6	19,040	71.22	24.91	396	99.4	62			

APPENDIX C
EQUIPMENT MANUFACTURER REPORTS

HAZEN AND SAWYER
Environmental Engineers & Scientists

ALFA LAVAL

ALFA LAVAL SUMMARY REPORT

CENTRIFUGE BIOSOLIDS DEWATERING PILOT TESTING

PROJECT NAME: **CENTRIFUGE BIOSOLIDS DEWATERING PILOT TESTING**
HOWARD F. CURREN AWTP, CITY OF TAMPA, FL
SUMMARY REPORT

End User	City of Tampa, FL
Date	June 9, 2013
Sales Representatives	The Mack Company

This proposal contains confidential and proprietary information of Alfa Laval Inc. Any party accepting receipt of this proposal does so on the express understanding and agreement that it will neither copy, reproduce, disclose the proposal to any third party nor use this proposal for any purpose other than those expressly agreed to by Alfa Laval Inc. in writing. Such party also agrees to indemnify of Alfa Laval Inc. against losses or damages suffered by Alfa Laval Inc. as a result of such parties' improper reproduction, disclosure or use of this proposal.

TABLE OF CONTENTS

Tab 1 Cover Letter

Tab 2 Pilot Test Report

Tab 3 Budget Proposal

Tab 4 Other Information Required to be Submitted by RFQ #72013113 –Section I. 3.7

- Maintenance hours
- Operation Hours
- Connected Horsepower
- Wash-water Requirements
- Dimensions, Weights and Structural Design Forces
- Standard Specifications

Alfa Laval Inc.	
Contact Person	Steve Johnson
Mailing Address	5400 International Trade Drive Richmond, VA 23231
E-mail	steve.johnson@alfalaval.com
Phone No.	(804) 236-1322
Web Page	www.alfalaval.us

Tab 1 COVER LETTER

June 10, 2013

Purchasing Department
Tampa Municipal Office Building, 2nd Floor
306 E. Jackson Street
Tampa, Florida 33602

RE: Howard F. Curren Advanced Wastewater Treatment Plant of the City of Tampa
Tampa, FL
SUMMARY REPORT

To Whom It May Concern:

Alfa Laval appreciated the opportunity to participate in the Centrifuge Biosolids Dewatering Pilot Testing at the Howard F. Curren AWTP.

We would like to take the opportunity to thank the Howard F. Curren Advanced Wastewater Treatment Plant staff for their help, assistance and support during the setup of the pilot unit and laboratory testing.

Enclosed are the Pilot Test report, Budget Proposal and other information required by the RFP Section I. 3.7.

Should you have any questions or require any further information please do not hesitate to give me a call at 804/236-1322. We are represented locally by the Mack Company, Mr. Barry Gregoire, his phone number is 904/553-1539.

Sincerely:

Steven Johnson

Steven T. Johnson
Regional Sales Manager
Environmental Market Unit, PTD

cc: Barry Gregoire, Mack Company
Lola Guerra, Alfa Laval

Tab 2 PILOT TEST REPORT

City of Tampa, FL WWTF

Centrifuge Dewatering Pilot Test Report

Test Date:	March 19 through March 23, 2013
Test Location:	Tampa, WI
Contact:	
Test Material:	Municipal Mixed Anaerobically Digested Sludge

Equipment:	ALSYS G2 45
Conducted By:	Alfredo Fernandez, Eric Csonka

BACKGROUND

The City of Tampa, FL currently dewaters its plant solids with belt filter presses. Alfa Laval is carrying out this pilot test to qualify for the project to supply decanter centrifuges to replace the belt press. The purpose of the pilot test was to determine the dewatering performance of an Alfa Laval G2 machine focusing specifically on polymer dosage and cake solids.

DECANTER CENTRIFUGE WORKING PRINCIPLE

Separation takes place in a horizontal cylindrical bowl equipped with a screw conveyor. The feed enters the bowl through a stationary inlet tube and is accelerated smoothly by an inlet rotor. Centrifugal forces cause sedimentation of the solids on the wall of the bowl. The conveyor rotates in the same direction as the bowl, but at a different speed, thus moving the solids towards the conical end of the bowl. The new design enables the hydraulic pressure inside the bowl to enhance scrolling through a narrow opening. Only the driest fraction of the cake leaves the bowl through the solids discharge openings into the casing. Separation takes place throughout the total length of the cylindrical part of the bowl, and the clarified liquid (centrate) leaves the bowl by flowing over adjustable plate dams into the casing.

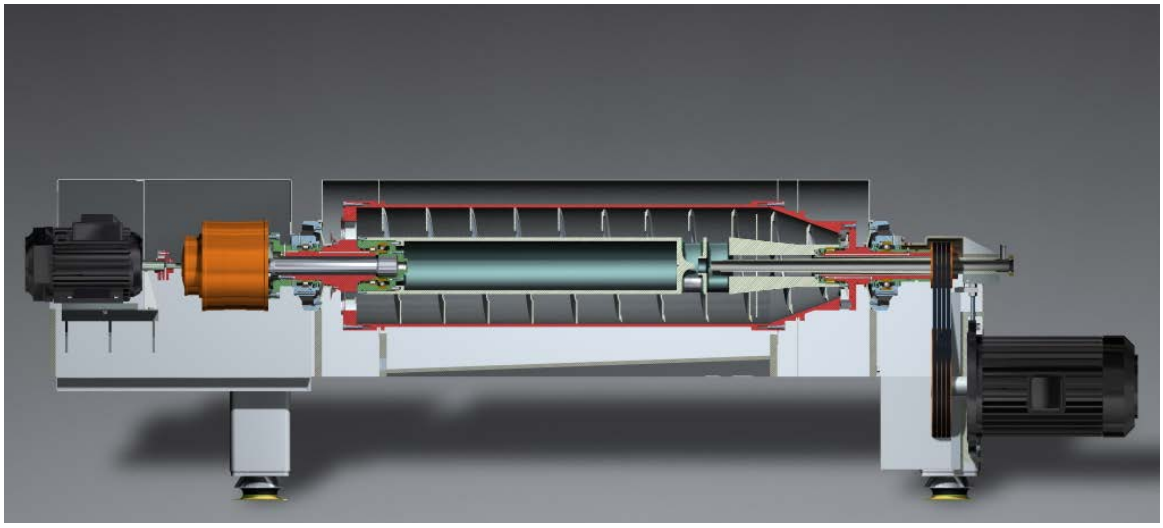

Process Optimization

The decanter centrifuge can be adjusted to suit specific requirements by varying the:

- Bowl speed to obtain the required G force for optimized separation – we ran at 4,020 rpm which produced a bowl wall G force of 3,252 g.
- Conveying speed for optimized balance between liquid clarity and solids dryness
- Pond depth in the bowl for optimized balance between liquid clarity and solids dryness – we ran using the deepest pond depth available.
- Feed rate – the Alfa Laval decanter centrifuge is designed to handle a wide range of flow rates – we ran 35 – 72 gpm.
- Polymer – polymer type, concentration, dosing point and dosage are adjusted to provide maximum solids recovery and cake dryness. Two SNF/Polydyne cationic emulsion products were tested. All references to polymer dose in this report are on an active solids basis.

Scaling using G-Volume

Predicting the performance in scaling up to a larger machine can be accomplished through the use of the G-Volume calculation. The G-Volume of a decanter centrifuge is defined as the liquid volume of the cylindrical section (behind the baffle disk) times the force of gravity at the bowl wall:

$$\textbf{G-Volume} = k\omega^2 D_b L(D_b^2 - D_d^2)$$

Where: $k = 4.83 \times 10^{-8}$, ω = bowl rpm, D_b = bowl diameter, in, L = cylinder length, in, D_d = solids discharge radius, in

TESTING

Alfa Laval set up an ALSYS G2 45 trailer onsite which consists of a macerator, feed pump, polymer system, decanter centrifuge, cake conveyor, flow meter, and control panel. Feed sludge was transferred from the belt press flocculation tank via hose to the trailer. Polymer was fed to the trailer from 5 gallon pails and 55 gallon drum. Polydyne C-6267 and CIBA Z8849FS polymers were tested and made down to a 0.2% concentration. The centrate gravity drained to a channel. Dewatered solids discharged from the inclined screw conveyor into a truck. Several feed, cake and centrate samples were analyzed for TS% each day.

The day before the test (March 18) was used to set up the system. Sludge dewatering was started on the second day (March 19). The unit was started with a negative pond setting using 96 mm dam plates and resulted in the best possible setting so they were not changed during the test. Adjustable dam plates determine the depth of the liquid in the bowl. Typically, deeper pond depth yields the best cake solids and centrate quality (solids capture). The test was started feeding at 35 gpm and the centrifuge sealed quickly and was stable. Polymer injection point was also optimized for better results, 50% inside the machine and 50% at the feed tube resulted the best location for polymer addition. Centrate was visually judged to be excellent (Capture $\geq$95%).

Both polymers used give very similar performance in the machine allowed to run the machine up to 45 gpm or 400 Lbs/h but did not allow for a higher capacity as the centrate would show a higher content of suspended solids and therefore the recovery would deteriorate.

Other polymers were tested no worth mentioning as the results were not acceptable.

TEST RESULTS

All results used in this report were from the City of Tampa lab. Feed flow rate ranged between 35 gpm up to a maximum of 45 gpm with a solids load of 317 Lbs/h up to 407 Lbs/h. Feed solids were fairly consistent running between 1.68 – 2.05%. Cake solids ranged 20.7% – 23.2% with an average of 22.3%.

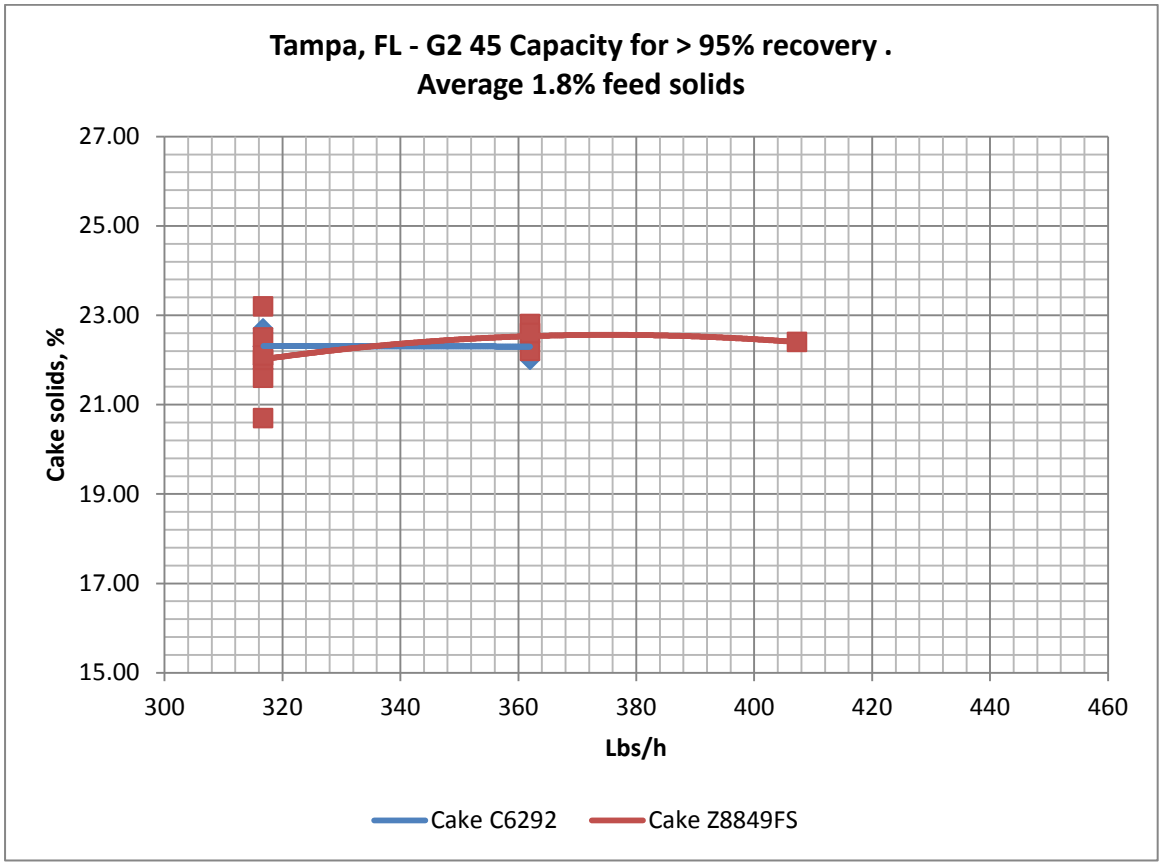

Centrate quality is above 95% on all samples.

In the following chart it can be seen than optimum polymer dosage was found to be around 35 Lbs/dT. At this consumption it is possible to achieve 22% cake. The maximum of 22.6% is obtained but requires up to 45 Lbs/dT.

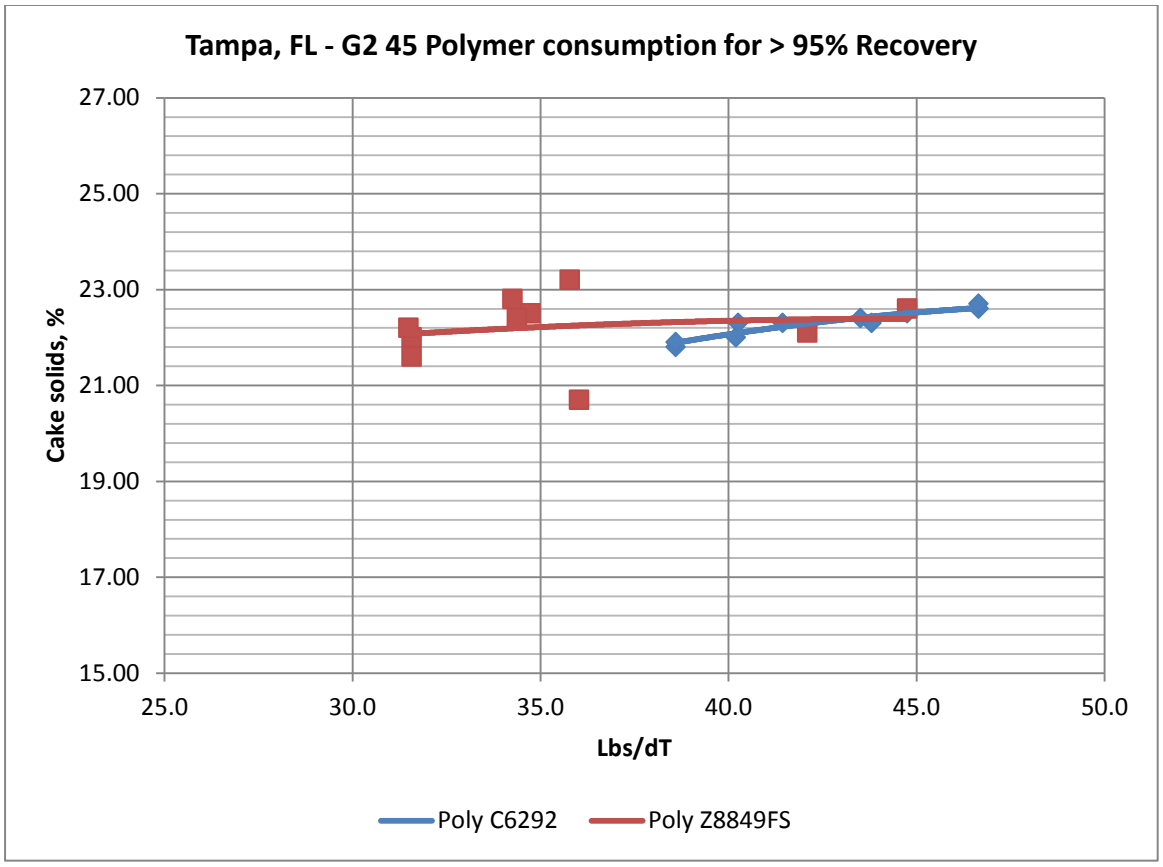

The polymer consumption is deemed to be in the high side for this type of sludge. It is possible that changing the conditions at the process in the plant would reflect in a much more economical dewatering operation.

CONCLUSIONS

Alfa Laval demonstrated that our G2 45 centrifuge can effectively dewater the City of Tampa's mixed anaerobically digested sludge, producing cake solids up to 22% at a polymer dosage of ≤ 35 lb/dry ton with capture exceeding 95%. This conclusion is based on the sludge conditions present in this plant at the time.

ACKNOWLEDGEMENTS

Alfa Laval would like to acknowledge and thank the City of Tampa staff for their assistance in the loading/unloading, setup and laboratory testing.

Typical centrate

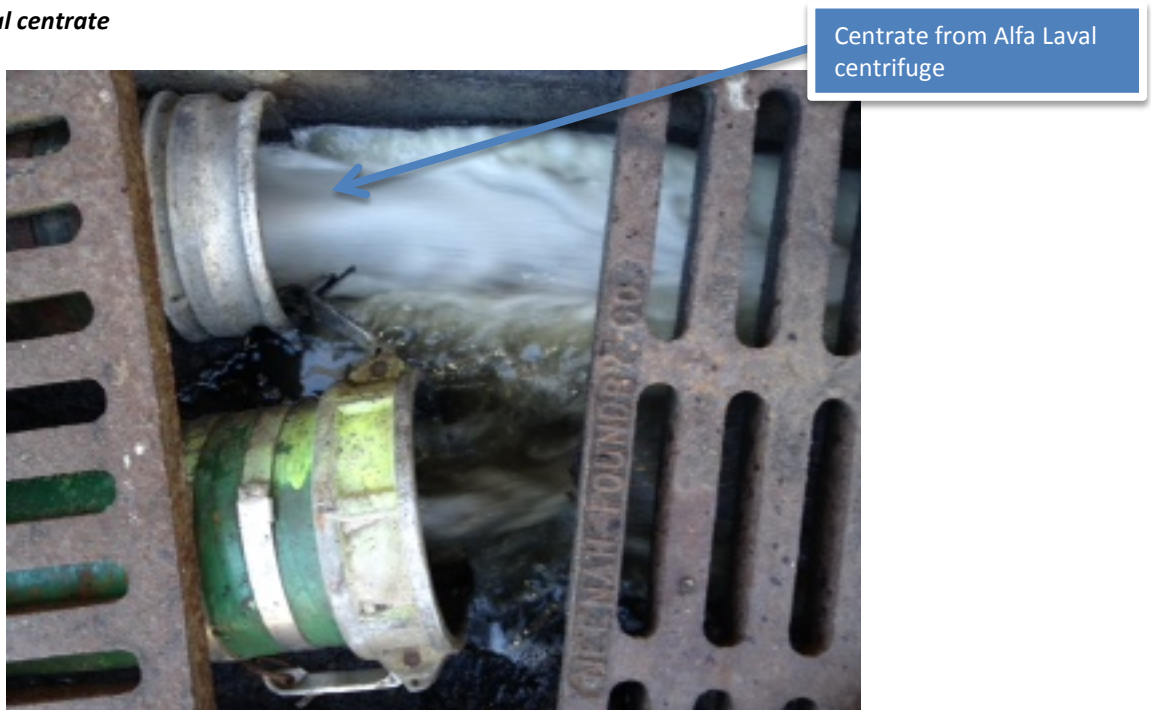

Typical cake solids

Test Results

Alfa Laval Inc.

Site:	Tampa, FL
Process & Sludge type:	MAD
Feed Average TVS, %	74.87-76.17
Decanter:	G2 45
Gearbox, kNm:	3.5
Serial Number:	5122089

10000

			Machine Conditions							Feed Parameters				Additive Conditions								Product Conditions			
Date	Time	Day	Pond Radius mm	Bowl Speed rpm	Diff. Speed (Δn) rpm	Total power MD+BD kWh	Power Cons kWh/dT (formula)	Torque %	Torque kNm (formula)	Feed Rate gpm	Feed Conc %TS (MB)	Feed Conc %TS (Plant)	Solids Loading Lbs/hr (formula)	Polymer Type	Neat Polymer Flow Rate gph	Neat Polymer Activity %	Dilution Water gpm	Polymer Conc % (formula)	Polymer Dosage #/TDS (formula)	Addition Point	Polymer cost $/Lb	Cake Conc %TS (MB)	Cake Conc %TS (Plant)	Effluent Conc %TSS (Plant)	Recovery % (formula)
19-Mar-13	9:00	1	96	4200	1.36	13.0	71.82			40	1.81	0.00	362	Z8849FS	1.9	40	5.0	0.25	34.3	Ex		22.8	22.80	0.022	98.9
19-Mar-13	10:00	1	96	4200	1.30	12.0	75.77	35.7	1.25	35	1.81	0.00	317	Z8849FS	1.7	40	4.2	0.26	34.7	Ex		22.5	22.50	0.007	99.6
19-Mar-13	11:00	1	96	4200	1.22	12.0	75.77	36.3	1.27	35	1.81	0.00	317	Z8849FS	1.5	40	3.9	0.26	31.6	Ex		22.2	21.60	0.006	99.7
19-Mar-13	12:00	1	96	4200	1.24	13.0	82.08	35.1	1.23	35	1.81	0.00	317	Z8849FS	1.5	40	4.0	0.25	31.6	Ex		21.8	22.00	0.006	99.7
19-Mar-13	13:00	1	96	4200	1.40	13.0	71.82	42.3	1.48	40	1.81	0.00	362	Z8849FS	1.7	40	4.6	0.25	31.5	Ex		21.7	22.20	0.021	98.9
19-Mar-13	14:00	1	96	4200	1.28	14.0	68.75	46.6	1.63	45	1.81	0.00	407	Z8849FS	2.1	40	6.4	0.22	34.4	Ex		22.2	22.40	0.036	98.2
20-Mar-13	9:00	2	96	4200	1.30	12.0	75.77	40.6	1.42	35	1.81	0.00	317	C6292	1.6	45	5.1	0.24	38.6	BP/W		20.7	21.80	0.020	99.0
20-Mar-13	10:00	2	96	4200	1.30	13.0	82.08	41.7	1.46	35	1.81	1.80	317	C6292	1.6	45	4.8	0.25	38.6	BP/W		21.9	21.90	0.020	99.0
20-Mar-13	11:00	2	96	4200	1.30	13.0	82.08	43.4	1.52	35	1.81	1.79	317	C6292	1.7	45	5.1	0.25	40.3	BP/W		21.4	22.30	0.014	99.3
20-Mar-13	12:00	2	96	4200	1.24	13.0	71.82	45.1	1.58	40	1.81	1.77	362	C6292	1.9	45	5.8	0.25	40.2	BP/W		22.1	22.00	0.062	96.8
20-Mar-13	13:00	2	96	4200	1.31	14.0	77.35	46.9	1.64	40	1.81	1.78	362	C6292	2.0	45	6.1	0.25	41.4	BP/W		21.9	22.30	0.033	98.3
20-Mar-13	14:00	2	96	4200	1.30	13.0	71.82	48.9	1.71	40	1.81	1.70	362	C6292	2.1	45	6.3	0.25	43.5	BP/W		22.3	22.40	0.031	98.3
21-Mar-13	9:00	3	96	4200	1.29	12.0	75.77	35.4	1.24	35	1.81	1.68	317	Z8819	1.6	42	6.2	0.19	36.0	50/50		20.3	20.70	0.026	98.6
21-Mar-13	10:00	3	96	4200	1.30	13.0	82.08	44.9	1.57	35	1.81	1.72	317	C6292	1.9	45	6.9	0.20	43.8	BP/W		21.8	22.30	0.041	97.8
21-Mar-13	12:00	3	96	4200	1.45	15.0	94.71	42.0	1.47	35	1.81	0.00	317	C6292	2.0	45	7.5	0.20	46.6	BP/W		22.6	22.60	0.003	99.8
21-Mar-13	13:00	3	96	4200	1.37	11.0	69.46	43.4	1.52	35	1.81	1.69	317	C6292	2.0	45	7.5	0.20	46.6	BP/W		22.1	22.60	0.004	99.8
21-Mar-13	14:00	3	96	4200	1.45	14.0	88.40	44.9	1.57	35	1.81	1.71	317	C6292	2.0	45	7.5	0.20	46.6	BP/W		22.4	22.70	0.004	99.8
22-Mar-13	8:00	4	96	4200	1.36	13.0	82.08	29.7	1.04	35	1.81	1.83	317	Z8849FS	1.7	40	4.6	0.25	35.8	BP/W		19.4	23.20	0.000	100.0
22-Mar-13	10:00	4	96	4200	1.45	13.0	82.08	42.0	1.47	35	1.81	2.05	317	Z8849FS	2.0	40	5.3	0.25	42.1	Ex		22.4	22.10	0.000	100.0
22-Mar-13	11:00	4	96	4200	1.45	13.0	71.82	43.7	1.53	40	1.81	2.05	362	Z8849FS	2.4	40	6.5	0.25	44.8	Ex		22.6	22.60	0.000	100.0
22-Mar-13	12:00	4	96	4200	1.40	14.0	77.35	47.7	1.67	40	1.81	1.77	362	C6267	2.4	40	6.4	0.25	44.8	BP/W		21.8	22.50	0.000	100.0

Tab 3 BUDGET PROPOSAL

June 9, 2013

To: Purchasing Department
Tampa Municipal Office Building, 2nd Floor
306 E. Jackson Street
Tampa, Florida 33602

Subject: Howard F. Curren Advanced Wastewater Treatment Plant of the City of Tampa
Tampa, FL
Budget Proposal: Dewatering Equipment

To Whom It May Concern

Alfa Laval is pleased to present this budget proposal based on the results achieved during the pilot test performed at Howard F. Curren Advanced Wastewater Treatment Plant of the City of Tampa, FL. The report of the pilot test is attached as a part of the SUMMARY REPORT.

Two operating conditions have been considered:

Alternative 1: 24 hours per day/ 7 days a week

SLUDGE PARAMETERS AND EXPECTED PERFORMANCE

Sludge Type	Municipal Mixed Anaerobically Digested Sludge
Sludge Flow	153.2 gpm
Sludge Concentration	1.74 % TS
Solids Load	32 dT/day
Expected Polymer Dose	40.2 lb/dT
Expected Cake Dryness	21.8 %TS
Expected Recovery	95 %

Two (2) ALDEC G2-115 Dewatering Centrifuge Systems for the use of dewatering plant solids will be complete and will include the following:

- Modular stand complete with one piece casing
- Rotating assembly complete with 20 kNm DD gearbox and pillow block bearings
- Grease Lubricated Main and Conveyor Bearings
- 25 Hp AC VFD Baldor Back Drive Motor
- 75 Hp AC VFD Premium Efficiency Baldor Main Drive Motor
- NEMA 4X centrifuge operator control panel mounted on a stand
- NEMA 12 free standing starter/back drive panel.
- ABB ACS 800 Series Variable Frequency Drives

- Programmable Logic Controller (PLC) and HMI (ABB)
- ** Power Loss Ride through Protection feature*
- Abrasion protection (Tungsten Carbide on wear surfaces)
- Standard vibration isolators
- Vibration and Temperature Sensors on Main Bearings
- Centrate discharge chute
- Flexible connectors
- Factory Paint System
- One (1) year standard factory warranty
- One (1) year supply of required lubricants
- One (1) set of required spares
- Freight to job-site, DDP

Also Included in pricing is the following;

- Up to Twenty (20) days and Four (4) trips of service time for on-site start-up assistance, training, and testing
- Submittal with drawings
- Operation and Maintenance Manuals
- One (1) set required tools for maintenance
- One (1) set of special tools including bowl lifter and conveyor lifter

Not included in pricing:

- Field wiring and motor flexible connections
- Piping, pipe venting, valves and flow meters
- Solids Discharge Chute and Conveyor
- Diverter Gate
- Feed Pump & Macerator
- Polymer and Polymer System
- Unloading at job-site
- Laboratory sample testing charges
- Storage and Handling fees
- Installation
- Taxes & Bonds

BUDGET PRICE FOR TWO (2) ALDEC G2-115 CENTRIFUGES: **$ 1,100,000.00**

Alternative 2: 24 hours per day/ 5 days a week

SLUDGE PARAMETERS AND EXPECTED PERFORMANCE

Sludge Type	Municipal Mixed Anaerobically Digested Sludge
Sludge Flow	214.5 gpm
Sludge Concentration	1.74 % TS
Solids Load	32 dT/day
Expected Polymer Dose	40.2 lb/dT
Expected Cake Dryness	21.8 %TS
Expected Recovery	95 %

Two (2) ALDEC G2-125 Dewatering Centrifuge Systems for the use of dewatering of plant solids will be complete and each one will include the following:

- Modular stand complete with one piece casing
- Rotating assembly complete with 30 kNm DD gearbox and pillow block bearings
- Grease Lubricated Main and Conveyor Bearings
- 50 Hp AC VFD Baldor Back Drive Motor
- 100 Hp AC VFD Premium Efficiency Baldor Main Drive Motor
- NEMA 4X centrifuge operator control panel mounted on a stand
- NEMA 12 free standing starter/back drive panel.
- ABB ACS 800 Series Variable Frequency Drives
- Programmable Logic Controller (PLC) and HMI (ABB)
- ** Power Loss Ride through Protection feature*
- Abrasion protection (Tungsten Carbide on wear surfaces)
- Standard vibration isolators
- Vibration and Temperature Sensors on Main Bearings
- Centrate discharge chute
- Flexible connectors
- Factory Paint System
- One (1) year standard factory warranty
- One (1) year supply of required lubricants
- One (1) set of required spares
- Freight to job-site, DDP

Also Included in pricing is the following;

- Up to Thirty (30) days and Six (6) trips of service time for on-site start-up assistance, training, and testing
- Submittal with drawings
- Operation and Maintenance Manuals
- One (1) set required tools for maintenance
- One (1) set of special tools including bowl lifter and conveyor lifter

Not included in pricing:

- Field wiring and motor flexible connections
- Piping, pipe venting, valves and flow meters
- Solids Discharge Chute and Conveyor
- Diverter Gate
- Feed Pump & Macerator
- Polymer and Polymer System
- Unloading at job-site
- Laboratory sample testing charges
- Storage and Handling fees
- Installation
- Taxes & Bonds

Also included in pricing

- Operation and Maintenance Manuals
- Submittal drawings
- One (1) Set of Standard Tools
- Freight to job-site

Not included in pricing are the following

- Field wiring and motor flexible connections
- Piping, pipe venting & valves
- Conveyor or Diverter Gate
- Feed Pump or Macerator
- Anchor Bolts
- Polymer & Polymer system
- Laboratory testing fees
- Unloading at job-site
- Storage and Handling fee's
- Installation
- Taxes and Bonds

BUDGET PRICE FOR Two (2) ALDEC G2-125 CENTRIFUGES: **$1,250,000.00**

(*) POWER LOSS RIDE THROUGH PROTECTION:

The Power Loss Ride Through Protection will allow the centrifuge to run through a short duration power blip, generally defined as 3-5 seconds. If the power outage extends past the 3-5 seconds the system will shut down the feed pump and polymer pump and put the centrifuge into the production standby mode for a programmed set time. If power is restored during this time the feed pump and polymer pump will automatically restart and production will resume.

Should the power not be restored, the control system will allow the centrifuge to be brought to a stop in a normal shutdown mode (as if it had power); including a normal flush cycle along with maintaining the differential speed during the coast down period. This system will allow the centrifuge to scroll the solids out and be available for an immediate restart, once power is restored. An Uninterrupted Power Supply (UPS) is never required with this feature in place. This feature comes in conjunction with Alfa Laval standard VFDs (ABB) and standard control system.

NOTES OF CLARIFICATION:

1. Warranty covers defects in materials and workmanship for Twelve (12) months after startup or beneficial use or Eighteen (18) months after shipment whichever comes sooner. Alfa Laval reserves the right to review operating and maintenance records to ensure compliance.

2. Included is service time for start-up assistance with the contract price. Any additional service time resulting from non-warranty delays will be charged in accordance with the field service rate schedule in effect at the time of service.

3. The process performance (cake solids, capture, polymer dosage, solids loading, hydraulic throughput, etc.) achieved by the centrifuge is dependent on sludge quality (age, grit content, etc.), sludge blend and volatile solids content, (%TVS).

4. Alfa Laval will provide anchor bolt sizing. Anchor bolts are to be supplied by the installing contractor. Installing contractor is responsible for maintaining all relevant electrical codes.

5. Anything not explicitly stated in this proposal is not included.

If you have any questions or require any additional information, please contact our local representative Mr. Barry Gregoire with Mack Company, at 904/553-1539.

Sincerely,

Lola Guerra
Sales Application Engineer
Market Unit Environment
☎ (804)-236-1265
(804)-334-7247
(804)-545-2738
lola.guerra@alfalaval.com

cc: Steve Johnson, AL
Barry Gregoire, Marck Company

Tab 4	**OTHER INFORMATION REQUIRED TO BE SUBMITTED BY RFQ# #72013113 – Section I. 3.7**

PREVENTIVE MAINTENANCE HOURS

ALDEC G2 115 LUBRICATION SCHEDULE

GEARBOX

Change the oil in the gearbox for each 2000 operating hours.

Lubricant	Quantities
Alfa Laval 61203671-10 61203671-16 Statoil Mereta 320	**20.0 kNm DD :** 16.2 Litres (17.3 quarts)

MAIN BEARINGS

The main bearings shall always be lubricated while the decanter is running. The optimal lubrication result is obtained if the decanter is lubricated while running at low speed such as during stopping of the decanter or towards the end of a low speed CIP cycle. Lubrication at low speed shall be used whenever possible.

The standard lubrication interval and lubricant quantity is:

Lubrication time interval: 300 operating hours
Lubricant quantity: 30 g (1.1 oz) - 20 strokes with std. grease gun
Lubricate bearings in both ends with the above, specified quantity.

- *Estimated one half hour to complete this lubrication. At 24/7 it is once every 12 days*

CONVEYOR BEARINGS

At lubrication of conveyor bearings, the decanter must be stopped and the main power must be properly disconnected according to the safety instructions.

The standard lubrication interval and lubricant quantity is:

The conveyor bearings shall normally be lubricated for each 1000 hours. Note that this will coincide with the mandatory visual inspection of bowl, casing and gearbox.
Lubricant quantity, large end: 75 g (2.7 oz) - 50 strokes with std. grease gun
Lubricant quantity, small end: 150 g (5.4 oz) - 100 strokes with std. grease gun
Lubricate bearings in both ends with the above, specified quantity.

- *Estimated one hour to complete this lubrication. At 24/7 it is once every 42 days*

ALDEC G2 125 LUBRICATION SCHEDULE

GEARBOX

Change the oil in the gearbox for each 2000 operating hours.

Lubricant	Quantities
Alfa Laval 61203671-10 61203671-16 Statoil Mereta 320	**30.0 kNm DD :** 27.7 Litres (29.6 quarts)

MAIN BEARINGS

The main bearings shall always be lubricated while the decanter is running. The optimal lubrication result is obtained if the decanter is lubricated while running at low speed such as during stopping of the decanter or towards the end of a low speed CIP cycle. Lubrication at low speed shall be used whenever possible.

The standard lubrication interval and lubricant quantity is:

Lubrication time interval: 150 operating hours
Lubricant quantity: 24 g (0.9 oz) - 16 strokes with std. grease gun
Lubricate bearings in both ends with the above, specified quantity.

- *Estimated one half hour to complete this lubrication. At 24/5 it is once every 19 days*

CONVEYOR BEARINGS

At lubrication of conveyor bearings, the decanter must be stopped and the main power must be properly disconnected according to the safety instructions.

The standard lubrication interval and lubricant quantity is:

The conveyor bearings shall normally be lubricated for each 1000 hours. Note that this will coincide with the mandatory visual inspection of bowl, casing and gearbox.
Lubricant quantity, large end: 130 g (4.6 oz) - 87 strokes with std. grease gun
Lubricant quantity, small end: 230 g (8.1 oz) - 153 strokes with std. grease gun
Lubricate bearings in both ends with the above, specified quantity.

- *Estimated one hour to complete this lubrication. At 24/5 it is once every 66 days*

MAINTENANCE TABLE

Recommended Intervals for Maintenance		
Item		**Interval**
Gearbox	***Oil Leakage Check*** ***Change lip seal(s) at sunwheel shaft(s) if leaking***	Monthly
	Oil Level Check	1000
	Oil Change	2000
Gearbox Spline Shaft	***Lubricate splines***	At each major service
Motor(s)	***Lubrication***	2000[1)]
V-belts	***Tightening up and Check*** ***Change***	2000 16000
Bowl	***Check for wear and corrosion.*** For decanters operating at high temperatures and/or high chloride levels in feed, check bolts connecting bowl section for corrosion and stress corrosion cracks. See safety instructions for details.	1000
Solids Discharge Wear Protection	***Check*** If damaged or excessively worn, fit new immediately.	1000
Safety Equipment	***Check functioning of:*** All alarm devices Safety equipment	2000
Labels	***Check:*** Nameplate and warning labels. Replace if not readable.	2000
Foundation bolts	***Check tightening***	4000
Vibration dampers	***Check*** Fit new, if necessary.	4000

Table 3.9.1

1) 2000 hours, unless specified otherwise in separate motor manual.

SUGGESTED OPERATION HOURS

Startup	30 minutes: - Release Emergency Stop knob, - Open valves – feed valve, polymer valve, dilution water valve (if any), - Start the decanter motor, - Start any means to transport discharged solids
Stop Decanter and cleanup	30 minutes: - Stop feed and polymer pumps - Close feed valve - Flush out with water while the decanter is running. Stopping the decanter before its bowl is sufficiently cleaned may give rise to heavy vibrations both during decanter rundown and during its successive run-up. - Stop the decanter motor - Press the CENTRIFUGE STOP button on operator panel

TOTAL CONNECTED POWER

ALDEC G2 115	- Main motor	75HP
	- Back drive motor	20 HP
ALDEC G2 125	- Main motor	100 HP
	- Back drive motor	50 HP

WASHWATER REQUIREMENT

ALDEC G2 115	-	Flush water	52-60 gpm
	-	Clean-In-Place	15-22 gpm
ALDEC G2 125	-	Flush water	110-115 gpm
	-	Clean-In-Place	22--30 gpm

DIMENSIONS, WEIGHTS AND STRUCTURAL DESIGN FORCES

ALDEC G2 115	61242958_v1_Dimensioned_Drawing.pdf
ALDEC G2 125	61243638_v1_Dimensioned_Drawing.pdf

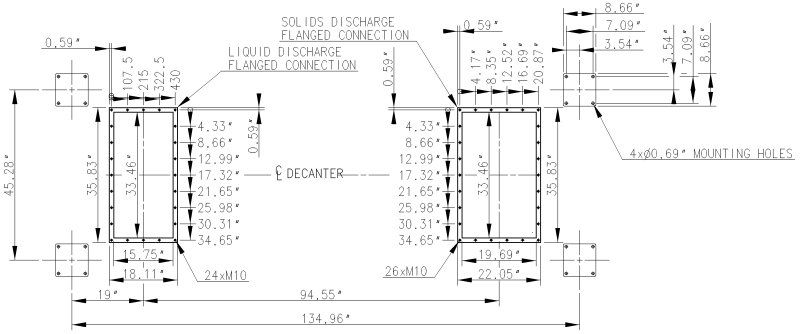

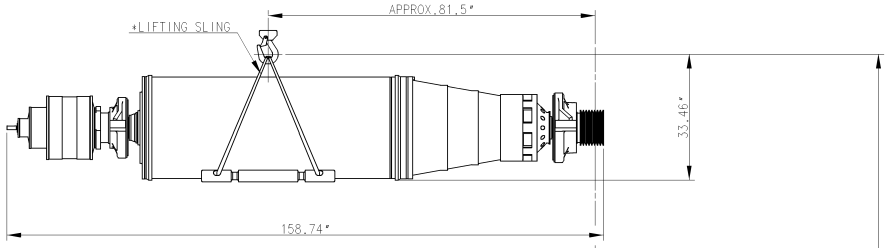

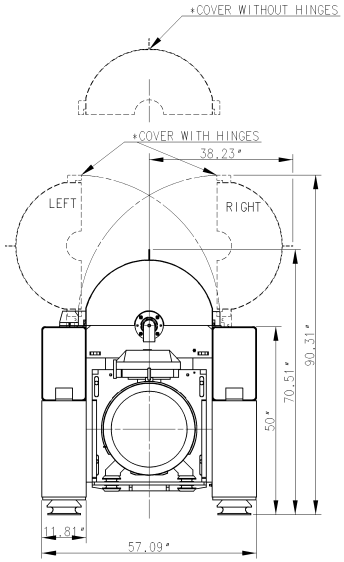

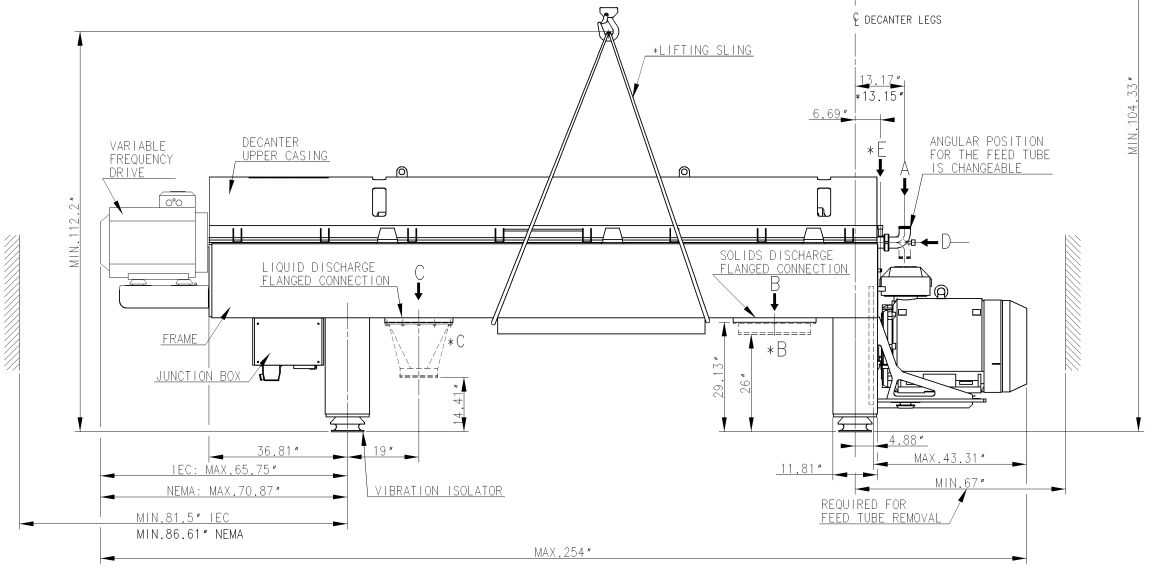

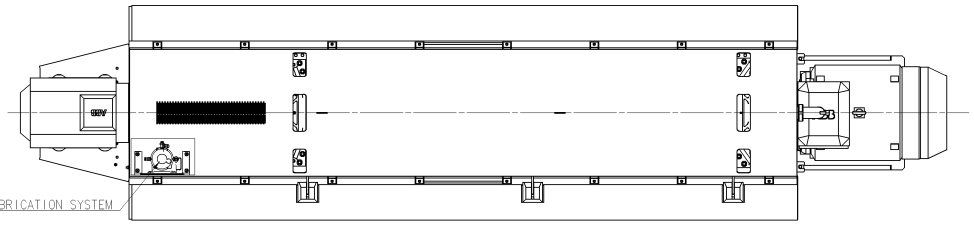

APPROXIMATE WEIGHTS:

TOTAL WEIGHT OF EMPTY DECANTER 6500kg/14300lbs
ROTATING ASSY INCL. PILLOW BLOCKS 2000kg/4400lbs
CPL.FRAME ASSY EXCL. MAIN MOTOR AND ROT.ASSY:2500kg/5500lbs
MAIN MOTOR 900kg/1980lbs
UPPER CASING 250kg/ 550lbs
GEAR BOX 300kg/ 660lbs
MIN.CRANE CAPACITY
FOR LIFTING OF ROTTING ASSY:..... 2800kg/6160lbs

LOADING DATA:

DECANTER
1. MAX. STATIC LOAD

A- VERTICAL ..... 75000 N
B- HORISONTAL..... 0 N

2. MAX. DYNAMIC LOAD AT RUN DOWN
(ADD TO STATIC LOAD)

A- VERTICAL ..... ±50000 N
B- HORIZONTAL..... ±12500 N

3. MAX. DYNAMIC LOAD AT OPERATING SPEED

A- VERTICAL ..... 2000 N
B- HORISONTAL..... 2000 N

ALL LOADS ARE EVENLY DISTRIBUTED ON THE VIBRATION ISOLATORS

CONNECTIONS:

		DIMENSION / TYPE
A	FEED	3" HOSE CONNECTION
B	SOLIDS OUTLET	RECTANGULAR FLANGE
*B	SOLIDS OUTLET FUNNEL	33.46" x 19.69"
C	LIQUID OUTLET	RECTANGULAR FLANGE
*C	HEAVY PHASE OUTLET	10" HOSE CONNECTION
D	POLYMER ADDITION	ISO 228-G 3/4 B CONNECTION
*E	POLYMER ADDITION	ISO 228-G 3/4 B CONNECTION

NOTES:

1- ALL CONNECTIONS MUST BE FLEXIBLE.

2- FOR PROPER VENTING OF DISCHARGE HOPPERS REFER TO THE INSTALLATION DRAWING. IMPROPER VENTING CAN LEAD TO LEAKAGE PROBLEMS.

3- CUSTOMER IS RESPONSIBLE FOR ANCHORING.

4- FOR FURTHER INFORMATION, SEE INSTALLATION DATA MANUAL AND INSTALLATION DRAWING

* OPTIONAL EQUIPMENT

COMPLEMENTARY DRAWING 61242957

This document and its contents are the particular property of Alfa Laval Copenhagen A/S and may not be copied, reproduced, or disclosure to other parties without prior written permission.
This document may contribute a particular application or use in the specified purpose only to the extent expressly agreed upon.

Rev. No.	Date	Modified By	Appr.
1	130221	DWE	KBSA

LUBRICATION SYSTEM IS ADDED.

Item	Article No.	Name-Designation	Material
20	Nbr. DD GEAR BOX		

Title: DIMENSIONED DRAWING
ALDEC G2 - 115

Alfa Laval
Alfa Laval Copenhagen A/S
SØBORG DENMARK

First angle projection	Surface roughness	Scale	Dept.	Date	Design Code
	$R_a\mu m$	1:12	GKU	090115	
		Format	Drawn	Appr.	Model
		A0	JLG	OAN	N

Document No. 61242958

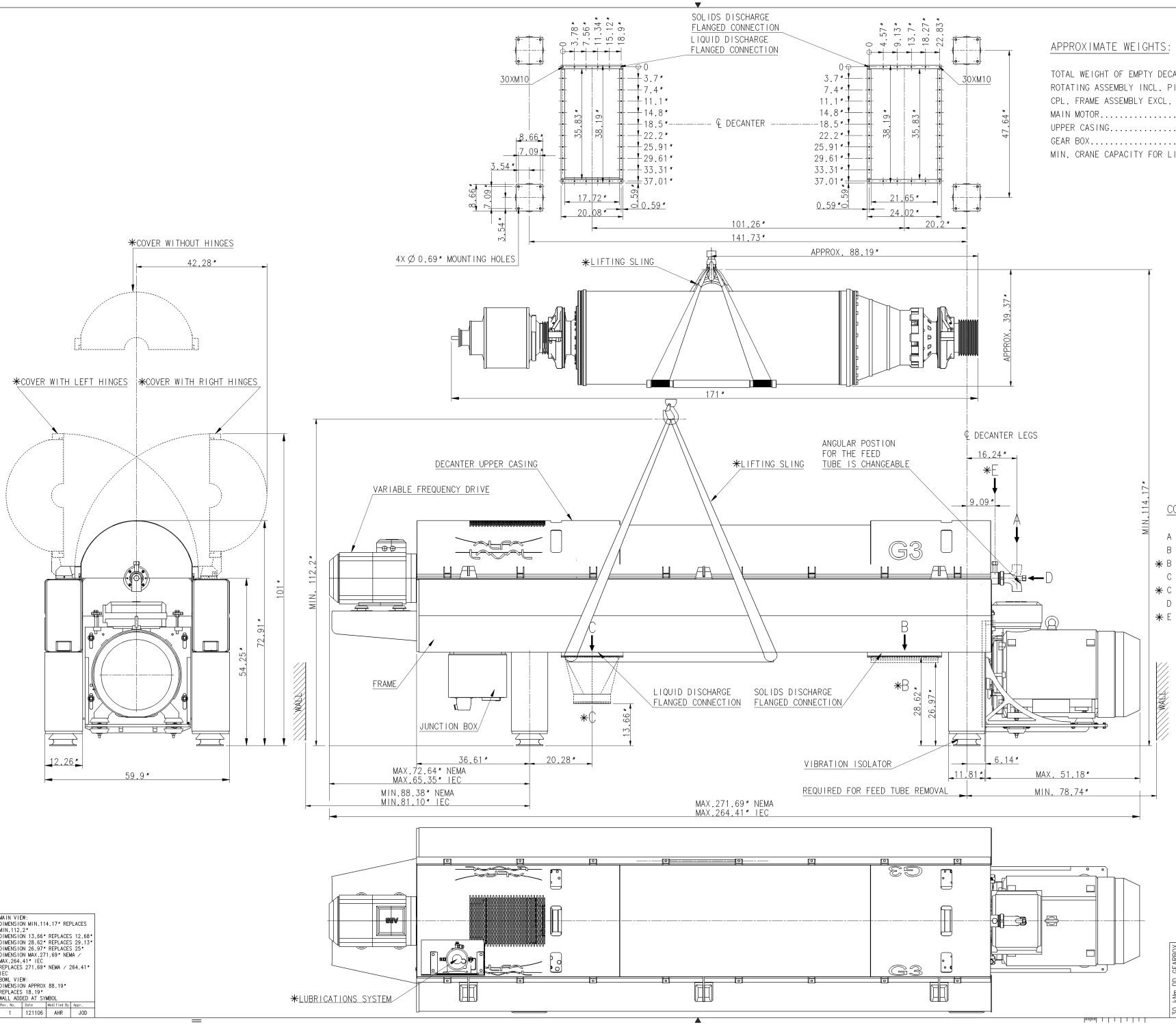

APPROXIMATE WEIGHTS:

TOTAL WEIGHT OF EMPTY DECANTER	8600kg/18959lbs
ROTATING ASSEMBLY INCL. PILLOW BLOCKS	2800kg/ 6172lbs
CPL. FRAME ASSEMBLY EXCL. MAIN MOTOR AND ROT. ASSEMBLY	3000kg/ 6613lbs
MAIN MOTOR	2000kg/ 4410lbs
UPPER CASING	350kg/ 771lbs
GEAR BOX	490kg/ 1090lbs
MIN. CRANE CAPACITY FOR LIFTING OF ROTATING ASSEMBLY	4500kg/ 9918lbs

LOADING DATA:

DECANTER

1. MAX.STATIC LOAD
   - A-VERTICAL ..... 100000 N
   - B-HORIZONTAL ..... 0 N
2. MAX. DYNAMIC LOAD AT RUN DOWN (ADD TO STATIC LOAD)
   - A-VERTICAL ..... ± 80000 N
   - B-HORIZONTAL ..... ± 40000 N
3. MAX. DYNAMIC LOAD AT OPERATING SPEED
   - A-VERTICAL ..... 3000 N
   - B-HORIZONTAL ..... 3000 N
   - ALL LOADS ARE EVENLY DISTRIBUTED ON THE VIBRATION ISOLATORS

CONNECTIONS:

		DIMENSION/TYPE
	A FEED	3" HOSE CONNECTION
	B SOLIDS OUTLET	RECTANGULER FLANGE
✱	B SOLIDS OUTLET FUNNEL	35,82" x 21,68"
	C LIQUID OUTLET	RECTANGULAR FLANGE
✱	C LIQUID PHASE OUTLET FUNNEL	12" HOSE CONNECTION
	D POLYMER ADDITION	ISO 226-G 1" B CONNECTION
✱	E POLYMER ADDITION	ISO 226-G 1" B CONNECTION

NOTES:

1. ALL CONNECTIONS MUST BE FLEXIBLE.
2. FOR PROPER VENTING OF DISCHARGE HOPPERS REFER TO THE INSTALLATION DATA MANUAL. IMPROPER VENTING CAN LEAD TO LEAKAGE PROBLEMS.
3. CUSTOMER IS RESPONSIBLE FOR ANCHORING
4. FOR FURTHER INFORMATION, SEE INSTALLATION DATA MANUAL.

✱OPTIONAL EQUIPMENT

COMPLEMENTARY DRAWING 61243637

Rev. No.	Date	Modified By	Appr.
1	121106	AHR	JOD

MAIN VIEW:
DIMENSION MIN.114.17" REPLACES MIN.112.2"
DIMENSION 13.66" REPLACES 12.68"
DIMENSION 28.62" REPLACES 29.13"
DIMENSION 26.97" REPLACES 25"
DIMENSION MAX.271.69" NEMA / MAX.264.41" IEC
REPLACES 271.69" NEMA / 264.41" IEC
BOWL VIEW:
DIMENSION APPROX 88.19"
REPLACES 18.19"
WALL ADDED AT SYMBOL

This document and its contents are the particular property of Alfa Laval Copenhagen A/S and may not be copied, reproduced, or disclosed to others without prior written consent of Alfa Laval Copenhagen A/S.

Item	Article No.	Name/Designation	WEIGHT	Material

30 kNm DD GEARBOX

Title: DIMENSIONED DRAWING
ALDEC G2-125

Alfa Laval Copenhagen A/S
SØBORG
DENMARK

First angle projection	Surface roughness	Scale	Date	Design Code
	R_a µm	1:10	110623	NX7240

Format	Drawn	Appr.	Model	Document No.
A0	AHR	JOD	Y	61243638

ASHBROOK SIMON HARTLEY

Pilot Test Report
Howard F. Curran AWTP
Tampa, FL

Equipment tested:

Ashbrook Simon-Hartley
WPN G3 High Solids
0.6 meter Belt Filter Press
Trailer Mounted System

Test dates: June 3-June 7, 2013
Test conducted by: Eric Csonka
Report Written by: Kimberly Wilson

Ashbrook Simon-Hartley®

WATER AND WASTEWATER TREATMENT SOLUTIONS

ASHBROOK SIMON-HARTLEY
11600 East Hardy / Houston, TX 77093 / 281-449-0322 / Fax 281-449-1324

ACKNOWLEDGEMENTS:
Ashbrook Corporation would like to thank Mr. Rory Jones and the plant personnel for their support and contributions to the completion of the test.

EXECUTIVE SUMMARY:
The sludge dewatered was an anaerobically digested blend of 50% primary and 50% waste activated sludge from a municipal facility. The feed solids ranged from 1.69-1.94%. The WPN-G3 High Solids achieved cake solids of 16.5-25.4% at loading rates of 361-847 pounds of dry solids per hour.

Sludge Characteristics

Sludge type:	Anaerobically digested blend of 50% Primary and 50% waste activated sludge (by weight)
pH:	Not measured
Temperature:	Not measured
Volatile solids content:	69.2-74.9%
Feed solids:	1.69-1.94%

Test Results

Hydraulic loading:	23.5-54.6 gpm
Solids loading:	361-847 lbs/hr
Cake solids:	16.5-25.4%
Capture:	≥ 95+%
Polymer dosage:	18-53 active lbs/ton of dry solids

Due to the wide range of test results, the following performance is recommended:

Expected Performance

Machine type:	WPN-G3 High Solids
Solids loading:	600-700 lbs/hr/m
Cake solids:	19-22%
Capture:	95+%
Polymer dosage:	25-30 active lbs/ton

The sludge pumps for future applications should be sized to overcome a pressure drop of approximately 30 psi across the sludge/polymer in –line mixer, and long radius elbows should be used for piping.

INTRODUCTION
During the period of June 3-7, 2013, Ashbrook Simon-Hartley conducted a pilot test with the new WPN-G3 High Solids belt filter press at the City of Tampa's Howard F. Curran Advanced Wastewater Treatment Plant (AWTP). The purpose of the test was to determine the process capabilities of our new WPN-G3 belt filter press at this plant.

An Ashbrook representative arrived on site on Monday, June 3, 2013. After setting up the unit, pilot testing commenced on the morning of June 4, 2013.

Ashbrook tested the following polymers: Polydyne Clarifloc C6266, Polydyne Clarifloc C6292, and the plant polymer of Zetag 8818.

SLUDGE DEWATERING PROCESS FLOW DESCRIPTION

The biosolids residuals from the holding tank were pumped separately to the WPN-G3 belt filter press using a positive displacement pump. A polymer solution is added inline to condition the sludge. The conditioned sludge enters the press where it is thickened in the gravity section and dewatered with the wedge and pressure sections of the belt filter press.

SAMPLE COLLECTION AND FLOW MEASURMENTS

The following grab samples were collected during the pilot test:

- Anaerobically digested blend of 50% Primary and 50% Waste activated sludge, prior to polymer addition
- Dewatered cake solids
- Combined filtrate stream

The following flow rates were monitored during the performance test:

- Anaerobically digested blend of 50% Primary and 50% Waste activated sludge flow (gpm), prior to polymer addition
- Polymer solution flow rate (gpm)
- Washwater inlet flow rate (gpm)

LABORATORY TESTS

All of the samples were sent to the plant laboratory for analysis.

ASSUMPTIONS

1) Densities of all streams were considered inconsistent (mostly made up of water).
2) TSS concentration of the inlet washwater stream was assumed to be 0 mg/l.

ASHBROOK SIMON-HARTLEY
11600 East Hardy / Houston, TX 77093 / 281-449-0322 / Fax 281-449-1324

RESULTS

Table 1: This table shows the test results for June 4, 2013.

Run #	**1**	**2**	**3**	**4**	**5**	**6**
Date	6/4	6/4	6/4	6/4	6/4	6/4
Type	AD	AD	AD	AD	AD	AD
FS	1.84	1.91	1.90	1.86	1.91	1.88
HL	23.5	28.5	26.7	38	39	36.7
SL	216	272	254	354	373	345
SL1	361	454	423	589	621	575
CS	22.8	18.65	18.91	23.03	22.78	21.38
CAP	99.3	99.4	99.1	99.3	99.2	98.7
PD	101.8	65.9	70.7	126.9	118.2	87.4
PD1	42.8	27.7	29.7	53.3	49.6	36.7
PT	Liquid	Liquid	Liquid	Liquid	Liquid	Liquid
PN	C6266	C6292	8818	C6266	C6266	8818
PM	Polydyne	Polydyne	BASF	Polydyne	Polydyne	BASF
BS	1.3	1.3	1.3	1.6	1.0	1.3
U	320	320	320	320	320	320
L	320	320	320	320	320	320

Table 2: This table shows the test results for June 4, 2013.

Run #	**7**	**8**				
Date	6/4	6/4				
Type	AD	AD				
FS	1.75	1.69				
HL	38.3	45				
SL	335	381				
SL1	559	634				
CS	19.9	18.9				
CAP	99.2	96.9				
PD	73.0	45.0				
PD1	30.7	18.9				
PT	Liquid	Liquid				
PN	8818	8818				
PM	BASF	BASF				
BS	1.3	1.4				
U	320	320				
L	320	320				

ASHBROOK SIMON-HARTLEY
11600 East Hardy / Houston, TX 77093 / 281-449-0322 / Fax 281-449-1324

Table 3: This table shows the test results for June 5, 2013.

Run #	**9**	**10**	**11**	**12**	**13**	**14**
Date	6/5	6/5	6/5	6/5	6/5	6/5
Type	AD	AD	AD	AD	AD	AD
FS	1.94	1.94	1.83	1.86	1.92	1.89
HL	43.6	40	41	54.6	35	36
SL	423	388	375	508	336	340
SL1	705	647	626	847	560	567
CS	19.54	19.26	19.07	20.05	19.29	19.35
CAP	99.4	99.3	99.3	99.5	98.3	99.1
PD	42.4	42.0	56.5	53.0	51.0	52.7
PD1	17.8	17.7	23.7	22.3	21.4	22.1
PT	Liquid	Liquid	Liquid	Liquid	Liquid	Liquid
PN	C6292	C6292	C6292	C6292	C6292	C6292
PM	Polydyne	Polydyne	Polydyne	Polydyne	Polydyne	Polydyne
BS	1.4	1.6	1.9	1.4	1.4	1.4
U	280	220	220	220	220	220
L	280	220	220	220	220	220

Table 4: This table shows the test results for June 5, 2013.

Run #	**15**	**16**	**17**			
Date	6/5	6/5	6/5			
Type	AD	AD	AD			
FS	1.88	1.82	1.9			
HL	32.4	41.4	41.6			
SL	305	377	396			
SL1	508	628	659			
CS	19.81	25.36	24.91			
CAP	99.1	99.6	99.4			
PD	77.6	117.9	112.4			
PD1	32.6	49.5	47.2			
PT	Liquid	Liquid	Liquid			
PN	C6292	C6266	C6266			
PM	Polydyne	Polydyne	Polydyne			
BS	1.4	1.1	1.7			
U	220	280	280			
L	220	280	280			

Where, AD = Anaerobically digested blend of 50% Primary and 50% WAS
FS = Feed solids Concentration (%TS)
HL = Hydraulic loading (gpm)
SL = Solids loading (lbs/hr/0.6 meter)
SL1 = Solids loading (lbs/hr/meter)
CS = Cake solids (%TS)
CAP = % Capture
PD = Polymer dosage (lbs/ton) neat
PD1 = Active polymer (lbs/ton)
PT = Polymer Type
PN = Polymer number
PM = Polymer manufacturer
BS = Belt speed
U = Tension upper compression belt (psig)
L = Tension lower compression belt (psig)

ANALYSIS OF RESULTS:

The sludge dewatered was an anaerobically digested blend of 50% primary and 50% waste activated sludge from a municipal facility. The feed solids ranged from 1.69-1.94%. The WPN-G3 High Solids achieved cake solids of 16.5-25.4% at loading rates of 361-847 pounds of dry solids per hour.

Sludge Characteristics

Sludge type:	Anaerobically digested blend of 50% Primary and 50% waste activated sludge (by weight)
pH:	Not measured
Temperature:	Not measured
Volatile solids content:	69.2-74.9%
Feed solids:	1.69-1.94%

Test Results

Hydraulic loading:	23.5-54.6 gpm
Solids loading:	361-847 lbs/hr
Cake solids:	16.5-25.4%
Capture:	≥ 95+%
Polymer dosage:	18-53 active lbs/ton of dry solids

Due to the wide range of test results, the following performance is recommended:

Expected Performance

Machine type:	WPN-G3 High Solids
Solids loading:	600-700 lbs/hr/m
Cake solids:	19-22%
Capture:	95+%
Polymer dosage:	25-30 active lbs/ton

ADDITIONAL INFORMATION:

- Suggested preventative maintenance hours per hour of operation: 40 hours per 2000 hours of operation

- Suggested operator hours per hour of operation: 30 minutes at start up and shutdown, 15 minutes every 3 hours to observe performance

- Total connected horsepower (for 2.oM WPN 12 roller): 6 hp for belt drives, 1 hp for the hydraulic pump motor and 15 hp for the washwater booster pump (Total = 22 hp)

- Daily washwater requirement: 80 gpm during operation

VIEW JUNTION BOX SIDE

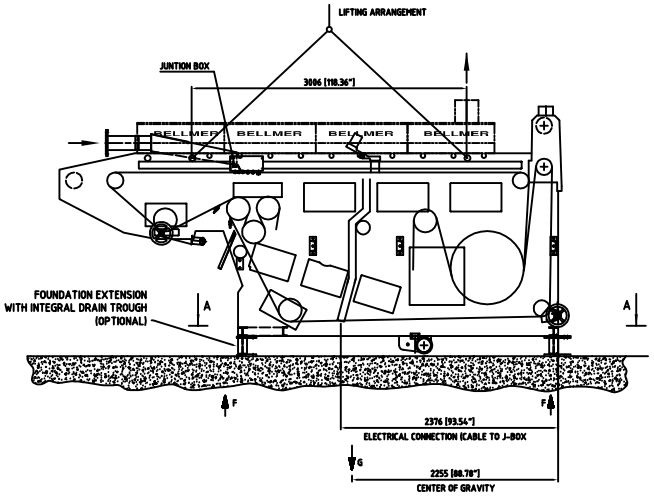

VIEW FEED END

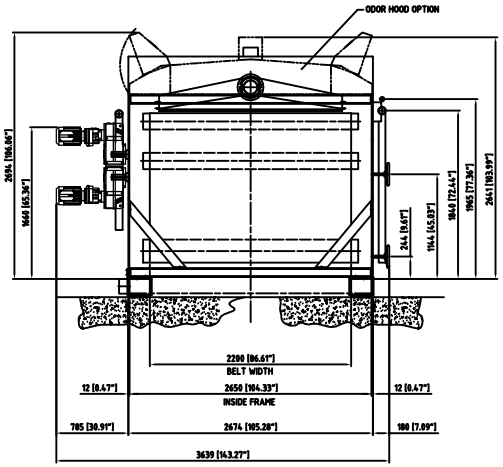

VIEW DRIVE SIDE

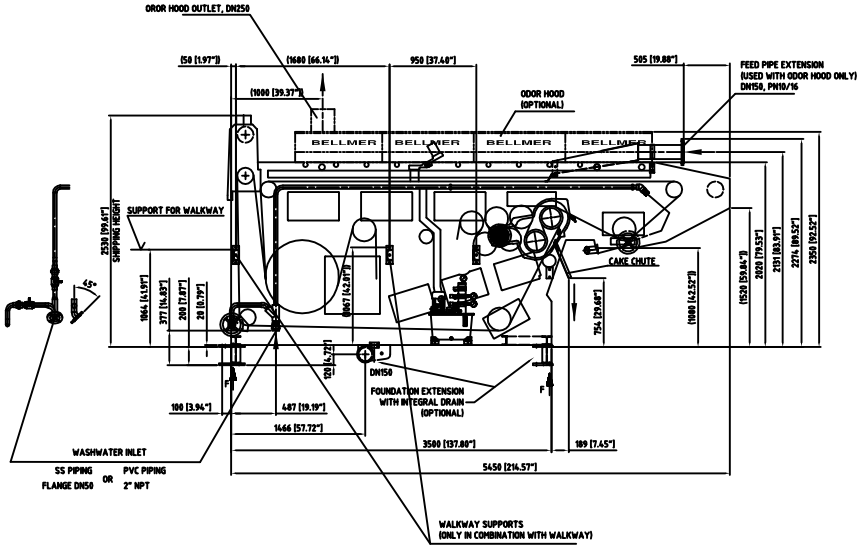

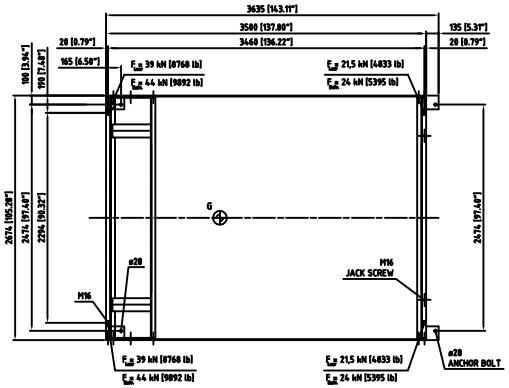

SECTION A–A

VIEW WEDGE END

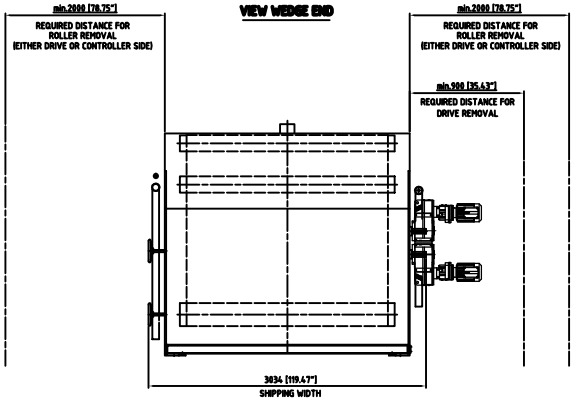

PLAN VIEW

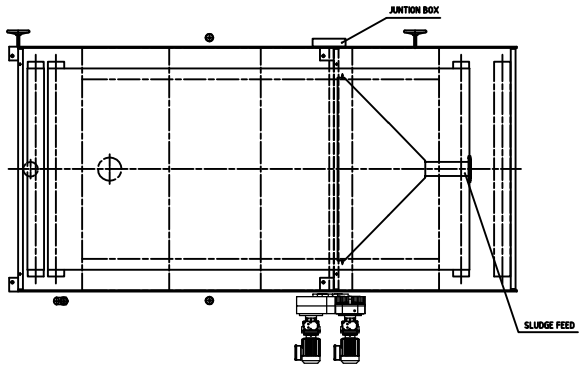

	14-ROLLER MACHINE
DRIVE	DUAL 3hp VFD CONTROL
UPPER BELT LENGTH	18.000 mm [708.7 in]
LOWER BELT LENGTH	18.000 mm [708.7 in]
DRY WEIGHT	12100 kg [26,676 lb]
OPERATING WEIGHT	13600 kg [29,983 lb]

DIMENSIONS ARE mm [INCH]

TOLERANCE UNLESS NOTED	INCHES	MILLIMETERS
FRACTION	+/- 1/32	N/A
X.	+/-0.100	+/-3.0
X.X	+/-0.030	+/-1.0
X.XX	+/-0.015	+/-0.5
X.XXX	+/-0.005	+/-0.1

REVISIONS

REV	DATE	DESCRIPTION	BY	APP'D
1				
2				
3				
4				
5				
6				

REVISIONS

REV	DATE	DESCRIPTION	BY	APP'D
7				
8				
9				
10				
11				
12				

NOTICE:
THIS DRAWING HAS NOT BEEN PUBLISHED AND IS THE SOLE PROPERTY OF ASHBROOK SIMON-HARTLEY OPERATIONS LP. IS LENT TO THE BORROWER FOR HIS CONFIDENTIAL USE ONLY. IN CONSIDERATION OF THIS LOAN, THE BORROWER PROMISES TO RETURN IT UPON REQUEST AND AGREES THAT IT SHALL NOT BE REPRODUCED, COPIED, LENT, OR OTHERWISE DISPOSED OF, DIRECTLY OR INDIRECTLY, NOR USED FOR ANY PURPOSE OTHER THAN THAT FOR WHICH IT IS SPECIFICALLY FURNISHED.

DRAWN	MM	DATE	9/2/09
CHECKED	MM	DATE	9/2/09
APPROVED	MCA	DATE	9/2/09
NEXT ASSY	N/A	WEIGHT	SEE TABLE

NOTE:
1)DEBURR ALL SHARP EDGES.
2)MARK WITH PART NUMBER PER WORK OR PURCHASE ORDER

Ashbrook Simon-Hartley

Ashbrook Simon-Hartley Operations LP.
11600 East Hardy Road
Houston, Texas 77093
Phone: 281-449-0322
FAX: 281-449-1324

TITLE
GENERAL ARRANGEMENT
WINKLEPRESS ENCLOSED 2008
2.0 METER WIDTH – 14 ROLL

SCALE	DWG. NO.	REV
1/56	SK003637	0

CUSTOMER: ASHBROOK

Porter, Jacob

From: Bob Bierhorst <bbierhorst@mts-florida.com>
Sent: Monday, July 15, 2013 3:34 PM
To: Porter, Jacob
Cc: Mike McLaughlin
Subject: RE: City of Tampa: Ashbrook Belt Press demo dates
Attachments: tampawpnk2013rd3.pdf; Tampa HCurren - calc for number of machines.xlsx

Jacob
Please find the final report from Ashbrook for the pilot test out at the Howard Curren plant.
The last page of Ashbrook's report has the details you are looking for to match the operating requirements below.
Also attached in the report is the drawing as requested.

To process 32 dry tons/day, in 24 hours,

32	dry tons / day
24	hours / day
1.333333	tons/hr
2666.667	lbs/hr
667	**lbs/hr/meter**
3.998001	**total number of meters required**

The range we expect for performance of the Winklepress is 600 – 700 lbs/hr/meter.
So we need (2) 2.0 meter presses to handle 32 dry/tons/day.

The budget price for (1) 2.0 meter Winklepress HS is $475,000.

If you have any questions, or need additional information, please do not hesitate to call.

Sincerely
Bob Bierhorst
MTS Environmental
813-929-4454
www.mts-florida.com

From: Porter, Jacob [mailto:jporter@hazenandsawyer.com]
Sent: Wednesday, July 10, 2013 2:33 PM
To: Porter, Jacob; Bob Bierhorst
Cc: Rory Jones
Subject: RE: City of Tampa: Ashbrook Belt Press demo dates

Bob,
What is the status of the updated report? I have received some of the information below from Ashbrook, but still need the budget pricing and revised report.
Thank you.
Jacob L. Porter, PE
Associate | Hazen and Sawyer
10002 Princess Palm Ave., Suite 200, Tampa, FL 33619
813 630-4498 (main) | 864 978-1322 (cell)
jporter@hazenandsawyer.com | hazenandsawyer.com

32	dry tons / day
24	hours / day
1.333333	tons/hr
2666.667	lbs/hr
600	lbs/hr/meter
4.444444	total number of meters required

60	dry tons / day
24	hours / day
2.5	tons/hr
5000	lbs/hr
600	lbs/hr/meter
8.333333	total number of meters required

32	dry tons / day
24	hours / day
1.333333	tons/hr
2666.667	lbs/hr
700	lbs/hr/meter
3.809524	total number of meters required

60	dry tons / day
24	hours / day
2.5	tons/hr
5000	lbs/hr
700	lbs/hr/meter
7.142857	total number of meters required

32	dry tons / day
24	hours / day
1.333333	tons/hr
2666.667	lbs/hr
667	**lbs/hr/meter**
3.998001	**total number of meters required**

60	dry tons / day
24	hours / day
2.5	tons/hr
5000	lbs/hr
625	**lbs/hr/meter**
8	**total number of meters required**

CENTRISYS

DEWATERING CENTRIFUGE PERFORMANCE ANALYSIS

A Pilot Study Conducted for:

The Howard F. Curren Advanced Wastewater Treatment Plant

Tampa, FL

WISCONSIN MANUFACTURER OF THE YEAR

An ISO 9001:2008 Company

9586 58th Place
Kenosha, WI 53144
Phone: (877) 339-5496
Fax: (262) 764-8705
www.centrisys.us
info@centrisys.us

GENERAL INFORMATION

Installation:	*Howard F. Curren Advanced Wastewater Treatment Plant Tampa, FL*
Test Dates:	*03/18/2013 - 03/22/2013*
Plant Contact:	*Timothy Ware*
Centrisys Site Personnel:	*Nick Flomp, Patrick Johnson, and Michael Sargent*
Report Author:	*Michael Sargent* *mike.sargent@centrisys.us*
Centrifuge Model:	*CS18-4*
Job Number:	*5426*
Polymer:	*Ashland's K148L, K290FLX, and K295FL; Polydyne's EM 840LOB and EM 840CT; BASF's 8819*
Feed Material Description:	*Sludge Mixture: 50% primary & 50% waste activated sludge (WAS)*

INTRODUCTION

The Howard F. Curren wastewater treatment plant (WWTP) of Tampa, Florida is currently dewatering thickened sludge with a collection of belt filter presses (BFPs).Each BFP operates at approximately 120 - 140 gpm. Sludge is dosed with approximately 60 lb./ton of polymer prior to dewatering. Cake produced varies between 15 – 16% TS. This moist cake is conveyed and discharged into trucks where it is eventuallyhauled and disposed off-site. This is currently considered inefficient because of the high moisture content of the cake and the costs associated with transportation.

Subsequently, it has been determined that purchasing more efficient dewatering equipmentis the best alternative for achieving a drier cake. Tampa is also open to the possibility ofutilizinga new polymer with their equipment.

During this unique side-by-side test a variety of dewatering manufacturers and technologies were invited to demonstrate on site: Alfa Laval a dewatering centrifuge, Huber a screw press, FKC a screw press, and Prime with a fan press. Centrisys was also selected to demonstrate the strong dewateringcapabilities of the CS18-4 centrifuge. This report will assess the initial trial of the CS18-4 centrifuge with sludge feed shared by all dewatering technologies.

Centrisysgreatly appreciates the opportunity to showcase our equipment for the City of Tampa. Our strong site performance and thissubsequent assessment report will undeniably prove that Centrisys dewatering equipment can and will excel in thisTampa dewatering application.

9586 58th Place
Kenosha, WI 53144
Phone: (877) 339-5496
Fax: (262) 764-8705
www.centrisys.us
info@centrisys.us

Pilot testing was completed at the Howard F. Curren Wastewater Treatment Plant in the City of Tampa, Florida the week of March 18th, 2013.

Figure 1: CS18-4 Trailer and Cake Collection

Feed samples received and tested by Centrisys lab personnel in Kenosha, Wisconsin indicated Ashland's K148L, K290FLX, and K295FL ideal polymers for field testing. In order to expand the scope of testing BASF's 8819 and Polydyne's EM840CT & EM840LOB were tested per vendor recommendations.

Site connections are pictured in Appendix C: Figure 2. Sludge was fed the Centrisys centrifuge from a feed line shared by the Alfa Laval dewatering test trailer. The sludge source was the same every day and feed total solids (TS) content ranged from 1.68 - 2.05%.

Centrate was drained to a collection basin near the rear of the trailer and returned to the plant headworks. Samples were collected from a centrate relief valve on the trailer. Also, cake was discharged into a dumpster managed by Tampa (Figure 1). Cake samples were collected at the end of the cake discharge conveyor. All cake and centrate samples were collected and processed by an independent laboratory.

During trial testing allpolymers were initiallyinjected directly at the sludge feed pump creating the most turbulent mixing. However, the best performance was observed with polymer dosed directly into the sludge feed pipe on the centrifuge. The various polymer injection points and description of mixing can be seen in Appendix B: Figure 4.

Testing continued for four days. The mobile test unit was dismantled and removed from siteon March22nd.

OBSERVATIONS & RESULTS

Figure 2: Cake Discharge

Centrisys was able to operate the centrifuge and perform this test with minimal interruption. Both cake and centrate quality remained consistent throughout testing. Any shifts in cake dryness or centrate quality should not be inferred as machine malfunction. This is merely a sign Centrisys is performing an objective analysis of our equipment and trying to optimize machine performance for our client.

The varied results this test yielded have demonstrated a variety of options for running our dewatering centrifuge. Final installation recommendations will depend on any plant design modifications made to Tampa and a further assessment of the plant's long and short-term process goals. Whether it is an effort to reduce polymer consumption, increase cake dryness, reduce energy consumption, etc. the machine settings can be easily modified to best suit most dewatering needs.

Applied Torque

The Viscotherm hydraulic scroll drive system allows Centrisys centrifuges to apply higher torque per installed horsepower than any other scroll drive system. By controlling the scroll speed via hydraulic valving the torque can easily be adjusted from the control panel. This is displayed in terms of hydraulic system pressure in units of Bar in the control system(See Appendix A: Table 1).

The scroll drive installed on the CS18-4 pilot unit applies 29.7Nm of torque per 1 Bar ofhydraulic system pressure (1 Nm = 0.737562149 ft·lb.). In theory, a higher torque will produce a drier cake. However, Centrisys has found this rule does not necessarily apply to all municipal sludges. Furthermore, a higher torque is oftenachieved by increasing the bowl speed and/or polymer dose. These factorsmay directly correlate to an increase in energy and/or polymer consumption which are monitored throughout testing and noted for every cake sample collected (See Appendix A: Table 3).

Figure 3: Centrate

The torque was varied on the first day of testing with polymers K148L and EM 840CT. From Figure 4 below it is clear that with both polymers the higher applied torque to the sludge the better cake produced. Subsequently, it is recommended the machine be operated at 100% bowl speed upon final installation to achieve the highest applied torque.

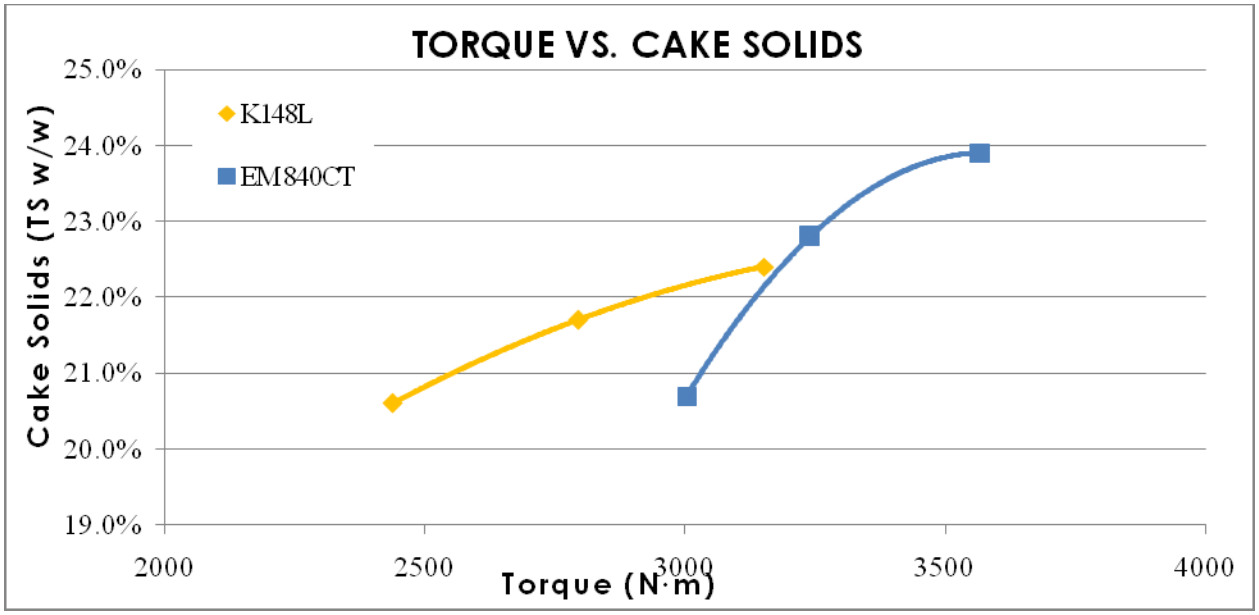

Figure 4: Torque Effects on Cake Solids

Feed Sludge Loading

Sludge pump speed was varied while testing to demonstrate the dryness of cake against the capacity of our CS18-4 centrifuge (see Figure 4 above). Sludge and the solids volume processed directly correlate to the changes in pump speed. This data is assessed against our wide range of centrifuge models and allow Centrisys to meet Tampa dewatering needs with the best product.

Power Analysis

Power was analyzed for the full startup, running, and shut down cycle of the centrifuge on the fourth day of testing. Voltage, Current, Total Active Power, and Total Average Power Factor readings were recorded every minute and logged digitally. A kWh was derived from this information and is outlined in Table 1 below.

The relationship between energy consumed and solids processed is also pictured in Figure 5 below. It should be noted that there is negligible consumption during shutdown of the machine.

Hour	kWh	Solids Processed
Start	0.00	0.000
8:00 AM	22.56	0.247
9:00 AM	39.16	0.530
10:00 AM	56.91	0.880
11:00 AM	74.47	1.247
12:00 PM	92.02	1.557
1:00 PM	107.00	1.873
Shutdown	108.44	1.873

Table 1: Power Consumption

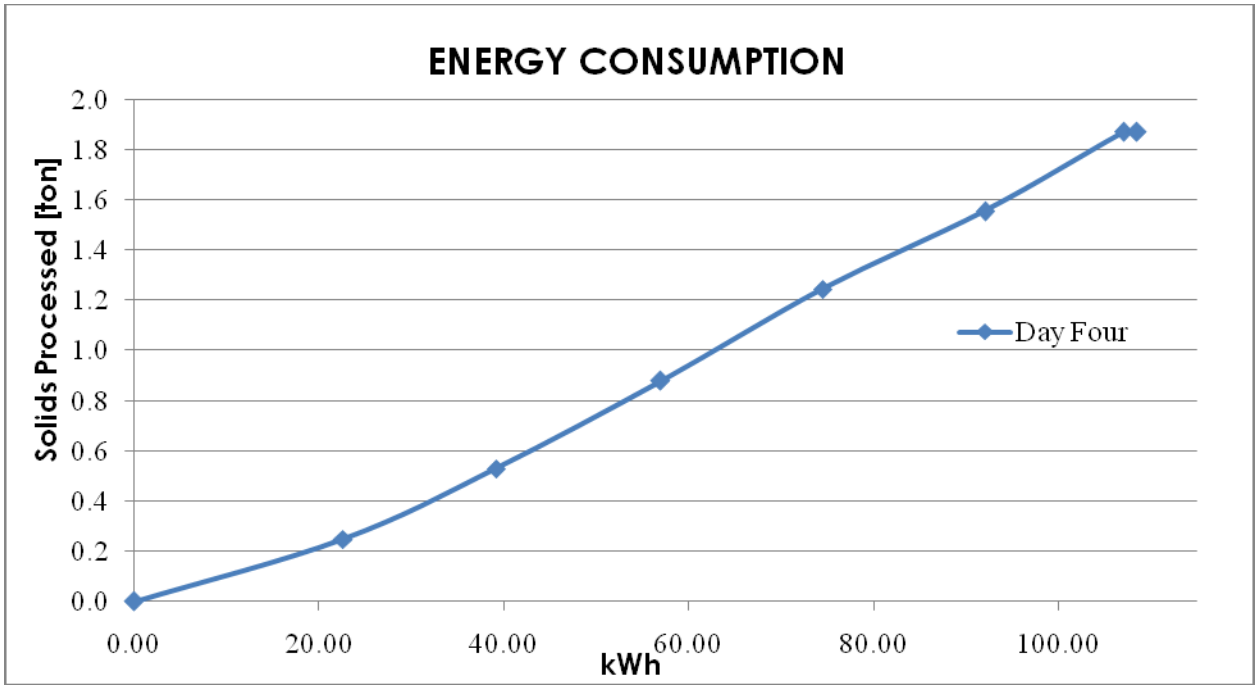

Figure 5: Solids Processed vs. Energy

Polymer

The relationship between polymer dose and cake dryness will vary from polymer to polymer. In generating test data for the polymer curve, the polymer application rate was dropped until centrate visually changed significantly for the worse. When you have solids carryover in the centrate it can be assumed the polymer feed flocculation is insufficient. This is considered the dosage breaking point.

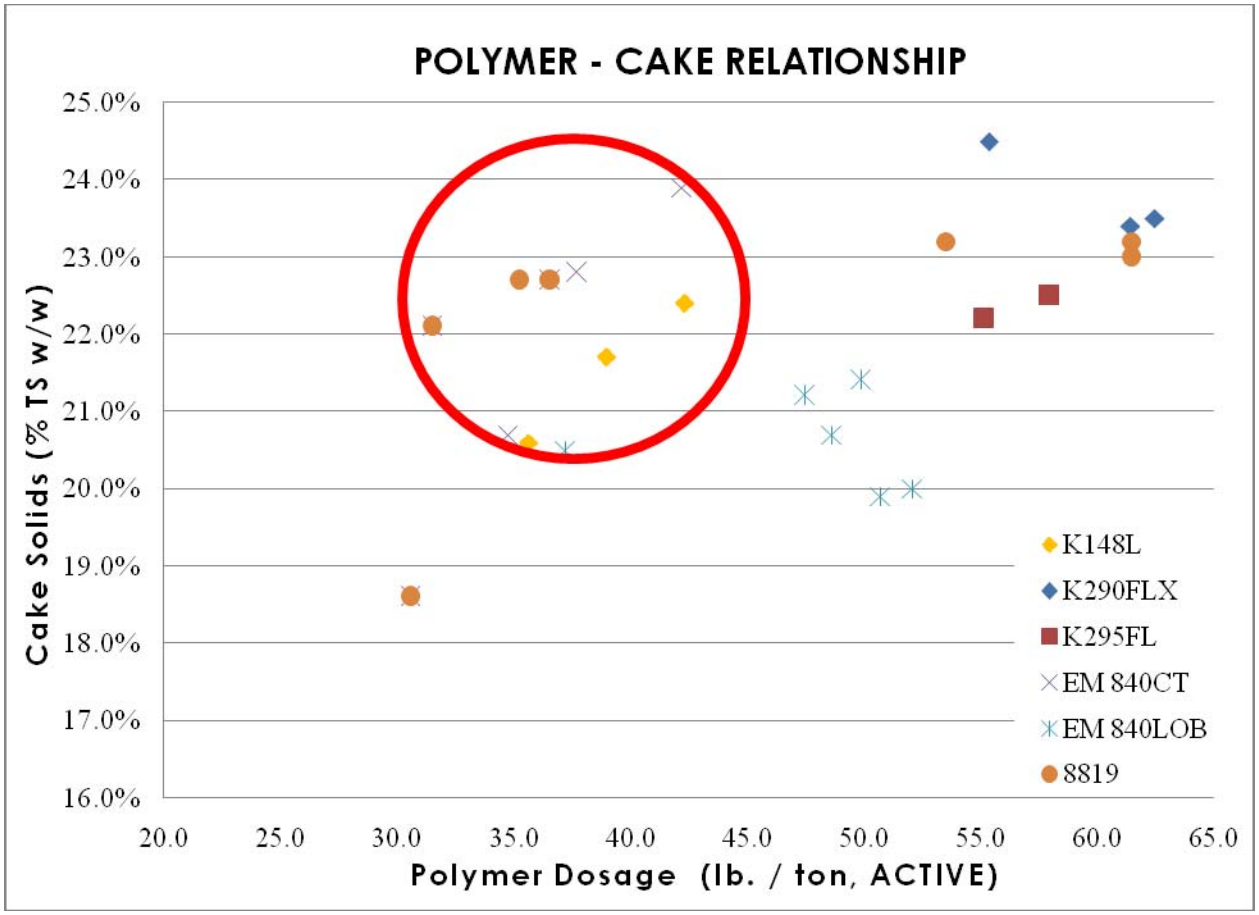

Figure 6: Polymer – Cake Dryness Relationship

The optimal low dose/high solids samples were produced with K148L, EM 840CT, EM 840LOB, and 8819.

If polymer conservation is the primary focus for Tampa, the BASF 8819 is most likely the polymer of choice. The final sale of polymer and cost is dependent on arrangements Tampa makes with a polymer vendor. Centrisys does not sell or manufacture polymer, however traditionally Ashland's 148L is a very inexpensive polymer compared to the others because of it's linear quality and may fit the City's needs better from a total cost comparison standpoint.

Furthermore, projections of polymer consumption have been based on the observed feed concentration and flow during testing. Changes in plant operations may cause polymer dose to increase and/or decrease over time. However under the conditions experienced during pilot testing, Centrisys can conclusively guarantee the performance of our CS26-4 sized units to achieve a minimum of 22% dewatered cake using no more than 40 lbs/ton of polymer with a minimum centrate quality of 95% (this value is our absolute minimum on any installed unit we have which must be assumed here due to missing centrate TS samples from the lab, however based on the samples we took this value should be able to be achieved at closer to 98-99% capture).

RESULTS OVERVIEW									
		POLYMER DOSAGE		G-Force [Gs]	Torque [Nm]	Solids Processed [lb. / hr]	Cake Solids [% TS]	Centrate TSS [mg/L]	Recovery of Insolubles
		Neat [lb. / dry ton]	*Active [lb. / dry ton]*						
K148L	Min:	*77.5*	*35.6*	3,007	2,438	633	20.6%	249	97.84%
	Max:	*92.0*	*42.3*	3,010	3,152	634	22.4%	427	98.73%
	Avg:	*84.8*	*39.0*	3,008	2,795	633	21.6%	335	98.30%
K290FLX	Min:	*125.9*	*55.4*	3,009	3,122	419	23.4%	64	98.68%
	Max:	*142.0*	*62.5*	3,010	3,122	432	24.5%	238	99.66%
	Avg:	*135.9*	*59.8*	3,010	3,122	427	23.8%	124	99.32%
K295FL	Min:	*138.0*	*55.2*	3,010	2,974	453	22.2%	46	97.72%
	Max:	*144.9*	*58.0*	3,010	3,330	506	22.5%	417	99.77%
	Avg:	*141.5*	*56.6*	3,010	3,152	479	22.4%	231	98.74%
EM840CT	Min:	*74.5*	*30.6*	3,010	2,884	619	18.6%	138	97.82%
	Max:	*103.0*	*42.2*	3,010	3,568	718	23.9%	417	99.30%
	Avg:	*93.3*	*35.6*	3,010	3,216	645	21.8%	338	98.32%
EM840LOB	Min:	*88.7*	*37.2*	3,010	2,557	466	19.9%	226	92.02%
	Max:	*124.1*	*52.1*	3,010	2,825	579	21.4%	1,550	98.86%
	Avg:	*113.6*	*47.7*	3,010	2,726	518	20.6%	743	96.16%
8819	Min:	*88.1*	*35.2*	3,009	3,093	427	22.7%	417	97.74%
	Max:	*153.7*	*61.5*	3,010	3,449	717	23.2%	417	98.19%
	Avg:	*132.3*	*52.9*	3,010	3,256	551	23.0%	417	97.99%
ALL SAMPLES	Min:	*74.5*	*30.6*	3,007	2,438	419	18.6%	46	92.02%
	Max:	*153.7*	*62.5*	3,010	3,568	718	24.5%	1,550	99.77%
	Avg:	*111.5*	*46.7*	3,010	3,031	555	22.0%	417	97.88%

Table 2: Polymer Dose and Output Overview

Response to Request for Qualifications (RFQ)

The following information has been requested per RFQ sections 3.5-PROCESSING and 3.7-SUMMARY REPORT.

Flow rate of sludge to pilot unit (gpm):

- *Varied between 60 – 70 gpm for scale-up purposes. See Appendix A: Table 1 for verification.*

Average polymer usage (gpm) and (lb./dry ton) based on the recorded polymer used divided by the calculated dry tons of solids processed:

- *The average polymer flow was 0.0599 gpm, Neat and average dose was 46.7 lb./ton, Active.*

Polymer cost ($/lb.) of selected polymer:

- *This will ultimately depend upon final contract arrangements with a polymer vendor. For estimation purposes costs are assumed $1.27/lb. at approximately 8.516 lb./gallon polymer.*

Activity of emulsion polymer (%):

- *Polymer activity varied from 40 – 46%. See Appendix A: Table 1 for activity and subsequent dosage verification.*

Dilution water used (gpm):

- *Varied from 6 – 12 gpm depending on polymer utilized. See Appendix A: Table 1 for verification.*

Electrical power consumption (kWh/dry ton) based on total power used by the centrifuge divided by the calculated dry tons of solids processed:

- *On day four of testing the power was continuously recorded using a data logger. The centrifuge consumed 108.444kWh/1.873 tons solids processed or 57.898 kWh/ton.*

Dewatered cake solids content (%) as measured by City Laboratory:

- *See Appendix A: Table 2*

Solids capture efficiency (TS, %) based on dry tons of solids in dewatered cake divided by calculated dry tons of solids processed:

Solids Capture Efficiency = C (F-E) / F (C-E) x 100:

C = Cake Solids (% Total Solids)
F = Feed Solids (% Suspended Solids)
E = Centrate Solids (% Suspended Solids)

- *See Appendix A: Table 3*

Total and volatile suspended solids of feed sludge (mg/L) as measured by City Laboratory:

- *See Appendix A: Table 2*

Total suspended solids content of centrate (mg/L) as measured by City Laboratory:

- *See Appendix A: Table 2*

Chemical oxygen demand in centrate (mg/L) as measured by City Laboratory:

- *See Appendix A: Table 2*

Total nitrogen concentration in centrate (mg/L) as measured by City Laboratory:

- *See Appendix A: Table 2*

Total phosphorous concentration in centrate (mg/L) as measured by City Laboratory:

- *See Appendix A: Table 2*

Washwater quantity (gal/dry ton) based on total washwater used divided by the calculated dry tons of solids processed:

- *Assuming a 2 week run-time and an average of 630 lb./hour solids processing, and 110 – 170 gal/day washwater required there would be a ratio of approximately 1,540 gal/254,840 lb. to 2,380 gal/lb. required or 12.18 gal/ton to 18.82 gal/ton.*

Fecal coliform density of sludge feed, MPN /dry gram biosolids (tested on Tuesday and Wednesday only):

- *Not reported by independent laboratory analysis.*

Fecal coliform density of dewatered cake, MPN /dry gram biosolids (day of test run):

- *Not reported by independent laboratory analysis.*

Fecal coliform density of dewatered cake, MPN /dry gram biosolids (24 hours after day of test run):

- *Not reported by independent laboratory analysis.*

Fecal coliform density of dewatered cake, MPN /dry gram biosolids (48 hours after day of test run):

- *Not reported by independent laboratory analysis.*

Estimated maintenance hours per hour of operation:

- *The machine is assumed to operate continuously with a shutdown every two weeks for maintenance. This would equate to one hour per two weeks (336 hours). Otherwise put as 3 hours maintenance per thousand hours of operation.*

Suggested preventative maintenance hours per hour of operation:

- *Every two weeks it is recommended the machine be shut down, bearings greased, and conduct a brief visual inspection of gaskets, hoses, etc. to ensure integrity. This should take approximately one hour.*

Suggested operator hours per hours of operation:

- *A Centrisys centrifuge will operate continuously without operator monitoring. However, it is recommended an operator physically observe machine centrate and cake output occasionally to ensure all systems are satisfactorily functioning.*

Total connected horsepower:

- *The CS26-4 (proposed for installation) features a Standard Main Motor HP: 125 and Scroll HP: 40. The test unit (CS18-4) features a Standard Main Motor HP: 40 and Scroll HP: 10.*

Daily washwater requirement:

- *Washwater is only required for one half hour during machine shutdown. During this time approximately 50 – 80 gpm is sufficient for flushing. Assuming continuous operation with a two week shutdown period, approximately 110 – 170 gallons of washwater is required per day.*

Dimensions, weights, and structural design forces:

- *See Appendix D*

Supplemental Equipment Information

An independent analysis was conducted by engineers with CDM Smith in March of 2012 for the New York City Department of Environmental Protection (NYCDEP). This study compared centrifuges from several manufacturers weighing similar centrifuge models on the following parameters: 1) Centrifuge Features 2) Centrifuge Performance 3) Installation issues 4) Operations + Maintenance Issues 5) Capital and Operations Cost.

The conclusion of the study found the Centrisys CS26-4 the optimum dewatering centrifuge for New York. The CS26-4 is also recommended for Tampa's dewatering application. Information used for the study is as follows:

- The CS26-4 centrifuge beach angle is 15 degrees.
- The bowl diameter/solids discharge diameter/bowl cylinder length is 26/15.3/89.6 inches. The CS26-4 bowl length is the longest of the units evaluated.
- The scroll is a closed flight design near the feed section to maximize solids transport and open near the centrate end to promote settling/capture, as indicated by Centrisys.
- The scroll is cast duplex and 316 SS to protect against corrosion and wear protection is provided by tungsten on the full length of the flights, using tiles in the feed zone and spray applied tungsten in the effluent zone. Replaceable tungsten carbide inserts are provided at the feed and discharge ports.
- The scroll design does not use a separator disc to raise the pond depth but incorporates a solids baffle on the beach which Centrisys claims affects the driest solids to be discharged from the machine.
- The main drive system consists of a VFD controlled main motor that rotates the bowl via an in-line belt and pulley arrangement. The scroll drive is a radial piston motor, manufactured by Viscotherm AG. This hydraulic conveyor drive has several differences from the hydraulic drives installed on the original NYCDEP centrifuges. The new piston motor and oil pump unit are more compact than the components of the original drives. The radial piston motor is of smaller diameter and weighs less than the planetary and cyclo boxes utilized by other manufacturers, while producing more torque at the scroll.
- The scroll speed is controlled by a gear pump remotely located in an oil reservoir driven by a variable speed AC motor. Changing the motor speed changes the oil flow, directly affecting scroll speed. This provides for an extremely controllable differential speed not affected by variations in load on the conveyor. In addition, unlike a sealed, oil filled speed reducer, the hydraulic oil flowing to the motor is constantly filtered to remove contamination from machine wear or condensation. This prolongs the life of the drive system. An external cooling water flow of 3 gpm is required to cool the hydraulic oil. Air cooling is also an option. Centrisys indicates the water supply can be plant effluent.

- The radial piston hydraulic motor is mounted outboard of the main bearings. The motor is bolted to the scroll and the output shaft is connected to the scroll shaft, rotating the scroll at a low rpm independently of the bowl speed. This arrangement allows the motor to drive the scroll whether the bowl is rotating or not, and has advantages of cleaning solids out of the bowl.
- The bearings are oil lubricated using an air conveyed single pass oil system. This system is simple in that oil drips from a reservoir into an air stream and sprays into the bearing. This is a favored method of lubricating high speed bearings from a bearing life standpoint, in that the oil is not recycled, there no potential for contamination and viscosity break-down.

CONCLUSIONS& RECOMMENDATIONS

The following has been identified through analysis of the pilot testing data collected at the Tampa Wastewater Treatment Plant:

- Centrisys centrifuge systems are capable of achieving a dewatered cake of potting soil consistency. An increased dryness of cake will enable Tampa to minimize cost associated with cake disposal.
- Cake dryness over the course of the pilot test ranged from 18.6 to 24.5%TS with an average of 22.0%.
- Upon final installation cake output can be expected to be consistently above 22.0% TS and sludge dosed below 40 lb. /ton, Active polymer.
- Centrate quality was maintained for the entirety of the pilot test. Given the strong results observed it is believed this should not be of concern when our centrifuge is placed in its final application and can be guaranteed at a minimum of 95% capture, however based on the few sample results we do have results on should be expected in the 98-99% capture range.

A Centrisys centrifuge will dewater the feed sludge from Tampa while maintaining strong dry cake, low polymer dose, and clean centrate. Four CS26-4 centrifuges should satisfy the current and projected dewatering needs for Tampa with three machines operating on an 8-hour operating cycle per day processing 32 dry tons per day with 2% influent feed and one as a stand-by to meet future peak flows.

The recommended amount of machines to handle 32 dry tons per day on a 24 hour operating cycle would be a total of two CS26-4 centrifuges with one machine as a stand-by to meet future peak flow under the same 2% influent feed condition listed above.

- The estimated maintenance hours from equipment failures/scheduled replacements based on actual data from the CS26-4 unit we have installed and running for the last 7 years in Lee County, FL would be 24 hours/year.
- The estimated preventative O&M hours based on actual data from the CS26-4 unit we have installed and running for the last 7 years in Lee County, FL would be 68 hours/year.
- The estimated operator hours per hour of operation of the unit would be 5-10 min/operating hour depending on whether it runs for (1) 8 hour shift or runs 24 hrs/day.
- The total connected Hp of (1) CS26-4 unit is 165 Hp
- The washwater requirement for the CS26-4 unit is 100 gpm @ 60 – 80 psi for a 20 min cycle at startup, shutdown and clean in place as needed only.

If you have any questions regarding the pilot test or this report please feel free to contact your local Florida Centrisys sales representative, Cory Peavy at *cp@tomevans.com*, our regional sales manager for the southeast US Patrick Johnson at *Patrick.Johnson@centrisys.us*, or Michael Sargent at *Mike.Sargent@centrisys.* Dimensional drawings are attached below for your review.

APPENDIX A:

Additional Data& Analysis

centrisys CENTRIFUGE SYSTEMS

PILOT TEST DATA

LOGISTICAL		PRIMARY SETTINGS		FEED CONDITIONING						MAIN BOWL DRIVE		HYDRAULIC SCROLL DRIVE				
Sample	Date & Time	Internal Pool Depth	Meter Feed Rate [gpm]	Injection Location 0=AM 1=BM	Polymer Pump Dial Setting [%]	Polymer Type	Polymer Activity [%]	POLYMER RATE		Bowl Speed [rpm]	Main Drive [amps]	Scroll Speed [rpm]	Hydraulic Pressure [bar]	CVC SETTINGS		
								Neat Polymer Flow [gpm]	*Dilution Water [gpm]*					ΔN	*P1*	α
A1	3/19/13 9:00 AM	A	70	0	3.4	K148L	46%	*0.0491*	*10.0*	3430	25.2	1.2	82	*1.0*	*78*	*6.5*
A2	3/19/13 10:00 AM	A	70	0	3.6	K148L	46%	*0.0537*	*10.0*	3430	24.6	1.4	94	*1.0*	*92*	*6.5*
A3	3/19/13 11:00 AM	A	70	0	3.8	K148L	46%	*0.0583*	*10.0*	3432	24.5	1.3	106	*1.0*	*105*	*6.5*
A4	3/19/13 12:00 PM	A	70	0	3.6	EM 840CT	41%	*0.0537*	*10.0*	3432	24.5	1.1	101	*1.0*	*100*	*6.5*
A5	3/19/13 1:00 PM	A	70	0	3.8	EM 840CT	41%	*0.0583*	*10.0*	3432	24.5	1.3	109	*1.0*	*108*	*6.5*
A6	3/19/13 2:00 PM	A	70	0	4.1	EM 840CT	41%	*0.0653*	*10.0*	3432	24.5	1.0	120	*1.0*	*125*	*6.5*
B1	3/20/13 9:00 AM	A	64	0	3.3	EM 840LOB	42%	*0.0514*	*10.0*	3432	23.4	1.0	86	*0.8*	*85*	*6.5*
B2	3/20/13 10:00 AM	A	64	1	4.0	EM 840LOB	42%	*0.0605*	*10.0*	3432	22.1	1.0	91	*0.8*	*90*	*6.5*
B3	3/20/13 11:00 AM	A	64	1	3.4	EM 840LOB	42%	*0.0527*	*12.0*	3432	22.6	1.0	94	*0.8*	*94*	*6.5*
B4	3/20/13 12:00 PM	A	72	1	4.2	EM 840LOB	42%	*0.0630*	*12.0*	3432	24.5	1.0	95	*0.8*	*96*	*6.5*
B5	3/20/13 1:00 PM	A	72	1	4.1	EM 840LOB	42%	*0.0617*	*12.0*	3432	24.5	1.4	91	*1.4*	*96*	*6.5*
B6	3/20/13 2:00 PM	A	72	1	4.1	EM 840LOB	42%	*0.0617*	*12.0*	3432	24.3	1.2	93	*1.2*	*100*	*6.5*
C1	3/21/13 9:00 AM	A	60	1	4.1	K290FLX	44%	*0.0585*	*10.0*	3432	22.8	1.3	105	*1.2*	*105*	*6.5*
C2	3/21/13 10:00 AM	A	60	1	3.8	K290FLX	44%	*0.0543*	*10.0*	3431	22.5	1.0	105	*1.0*	*105*	*6.5*
C3	3/21/13 11:00 AM	A	60	1	4.3	K290FLX	44%	*0.0614*	*10.0*	3432	22.6	1.0	105	*1.0*	*110*	*6.5*
C4	3/21/13 12:00 PM	A	60	1	4.6	K295FL	40%	*0.0656*	*10.0*	3432	22.3	1.0	112	*1.2*	*114*	*6.5*
C5	3/21/13 1:00 PM	A	70	1	4.9	K295FL	40%	*0.0699*	*10.0*	3432	22.4	1.0	100	*1.4*	*105*	*6.5*
C6	3/21/13 2:00 PM	A	60	1	4.6	8819	40%	*0.0656*	*10.0*	3432	22.3	1.0	104	*1.2*	*110*	*6.5*
D1	3/22/13 9:00 AM	A	60	1	5.4	8819	40%	*0.0759*	*6.0*	3432	22.7	1.2	116	*1.2*	*120*	*6.5*
D2	3/22/13 10:00 AM	A	60	1	5.4	8819	40%	*0.0759*	*6.0*	3432	22.6	1.2	108	*1.2*	*110*	*6.5*
D3	3/22/13 11:00 AM	A	70	0	4.6	8819	40%	*0.0631*	*6.0*	3431	23.2	1.2	110	*1.2*	*110*	*6.5*
D4	3/22/13 12:00 PM	A	70	0	4.1	EM 840CT	41%	*0.0552*	*10.0*	3432	24.3	1.2	97	*1.2*	*110*	*6.5*
D5	3/22/13 1:00 PM	A	70	0	4.1	EM 840CT	41%	*0.0552*	*10.0*	3432	24.0	1.2	114	*1.2*	*120*	*6.5*
D6	3/22/13 2:00 PM	A	70	0	3.6	EM 840CT	41%	*0.0472*	*10.0*	3432	25.1	1.0	108	*1.0*	*115*	*6.5*

Table 1: Test Data

LAB ANALYSIS									
LOGISTICAL		FEED			CAKE	RETURN			
Sample	Date & Time	TSS [mg/L]	TS % Solids	VS % Volatile	Lab % TS	TSS [mg/L]	COD [mg/L]	TN [mg/L]	TP [mg/L]
A1	3/19/13 9:00 AM	18,109	1.81%	74.87%	20.6%	427	1,340	1,210	68.1
A2	3/19/13 10:00 AM	18,109	1.81%	74.87%	21.7%	330			
A3	3/19/13 11:00 AM	18,109	1.81%	74.87%	22.4%	249			
A4	3/19/13 12:00 PM	18,109	1.81%	74.87%	20.7%	306			
A5	3/19/13 1:00 PM	18,109	1.81%	74.87%	22.8%	337			
A6	3/19/13 2:00 PM	18,109	1.81%	74.87%	23.9%	138			
B1	3/20/13 9:00 AM	18,109	1.81%	74.87%	20.5%	855	647	1,050	42.5
B2	3/20/13 10:00 AM	18,040	1.80%	74.06%	20.0%	226			
B3	3/20/13 11:00 AM	17,920	1.79%	75.89%	21.2%	1550			
B4	3/20/13 12:00 PM	17,680	1.77%	75.11%	21.4%	905			
B5	3/20/13 1:00 PM	17,760	1.78%	75.45%	20.7%	279			
B6	3/20/13 2:00 PM	17,040	1.70%	75.35%	19.9%	643			
C1	3/21/13 9:00 AM	16,760	1.68%	73.51%	23.4%	238	2,830	1,080	69.9
C2	3/21/13 10:00 AM	17,240	1.72%	74.71%	24.5%	71			
C3	3/21/13 11:00 AM	17,280	1.73%	74.77%	23.5%	64			
C4	3/21/13 12:00 PM	18,109	1.81%	74.87%	22.5%	46			
C5	3/21/13 1:00 PM	16,880	1.69%	74.88%	22.2%	417			
C6	3/21/13 2:00 PM	17,080	1.71%	73.77%	23.0%	417			
D1	3/22/13 9:00 AM	18,280	1.83%	74.40%	23.2%	417	1,830	1,300	226.0
D2	3/22/13 10:00 AM	21,000	2.10%	74.86%	23.2%	417			
D3	3/22/13 11:00 AM	20,480	2.05%	76.17%	22.7%	417			
D4	3/22/13 12:00 PM	20,520	2.05%	75.05%	22.1%	417			
D5	3/22/13 1:00 PM	17,680	1.77%	75.11%	22.7%	417			
D6	3/22/13 2:00 PM	18,109	1.81%	74.87%	18.6%	417			

Table 2: Lab Data (processed by independent laboratory)

DATA ASSESSMENT																			
	FEED			POLYMER FLOW & DOSAGE					BOWL			OUTPUT				ENERGY			
SAMPLE	Meter Feed Rate [gpm]	Solids % DS	Sludge Flow [gpm]	Dilution H_2O Flow [gpm]	Neat Rate [gpm]	Polymer Conc. [%]	Neat [lb. / dry ton]	Active [lb. / dry ton]	G-Force [G]	Torque [N·m]	Solids Processed [lb. / hr]	Daily Total Solids Processed [ton]	Cake Solids [% TS]	Centrate TSS [mg/L]	Recovery of Insolubles [% w/w]	Main Drive [kW]	Backdrive [kW]	Total Energy Usage [kW]	kW/gpm
A1	70	1.81%	70	10	0.049	0.49%	77.5	35.6	3007	2438	633.2	0.317	20.6%	427	97.8%	20.1	8.5	28.57	0.41
A2	70	1.81%	70	10	0.054	0.54%	84.7	39.0	3007	2795	633.6	0.633	21.7%	330	98.3%	19.6	8.8	28.41	0.41
A3	70	1.81%	70	10	0.058	0.58%	92.0	42.3	3010	3152	633.6	0.950	22.4%	249	98.7%	19.5	9.1	28.67	0.41
A4	70	1.81%	70	10	0.054	0.54%	84.7	34.7	3010	3003	633.6	1.267	20.7%	306	98.5%	19.5	9.0	28.53	0.41
A5	70	1.81%	70	10	0.058	0.58%	92.0	37.7	3010	3241	633.6	1.584	22.8%	337	98.3%	19.5	9.2	28.75	0.41
A6	70	1.81%	70	10	0.065	0.65%	103.0	42.2	3010	3568	633.6	1.901	23.9%	138	99.3%	19.5	9.6	29.07	0.42
B1	64	1.81%	64	10	0.051	0.51%	88.7	37.2	3010	2557	579.3	0.290	20.5%	855	95.7%	18.6	8.6	27.24	0.43
B2	64	1.80%	54	10	0.060	0.60%	124.1	52.1	3010	2706	486.9	0.533	20.0%	226	98.9%	17.6	8.7	26.34	0.49
B3	64	1.79%	52	12	0.053	0.44%	113.1	47.5	3010	2795	465.7	0.766	21.2%	1550	92.0%	18.0	8.8	26.82	0.52
B4	72	1.77%	60	12	0.063	0.53%	118.8	49.9	3010	2825	530.2	1.031	21.4%	905	95.3%	19.5	8.8	28.36	0.47
B5	72	1.78%	60	12	0.062	0.51%	115.9	48.7	3010	2706	532.6	1.297	20.7%	279	98.6%	19.5	8.7	28.25	0.47
B6	72	1.70%	60	12	0.062	0.51%	120.8	50.7	3010	2765	511.0	1.553	19.9%	643	96.5%	19.4	8.8	28.15	0.47
C1	60	1.68%	50	10	0.059	0.59%	139.7	61.5	3010	3122	418.8	0.209	23.4%	238	98.7%	18.2	9.1	27.28	0.55
C2	60	1.72%	50	10	0.054	0.54%	125.9	55.4	3009	3122	430.8	0.425	24.5%	71	99.6%	17.9	9.1	27.04	0.54
C3	60	1.73%	50	10	0.061	0.61%	142.0	62.5	3010	3122	431.8	0.641	23.5%	64	99.7%	18.0	9.1	27.12	0.54
C4	60	1.81%	50	10	0.066	0.66%	144.9	58.0	3010	3330	452.6	0.867	22.5%	46	99.8%	17.8	9.3	27.09	0.54
C5	70	1.69%	60	10	0.070	0.70%	138.0	55.2	3010	2974	506.2	1.120	22.2%	417	97.7%	17.8	9.0	26.82	0.45
C6	60	1.71%	50	10	0.066	0.66%	153.7	61.5	3010	3093	426.8	1.334	23.0%	417	97.7%	17.8	9.1	26.86	0.54
D1	60	1.83%	54	6	0.076	1.26%	153.7	61.5	3010	3449	493.4	0.247	23.2%	417	97.9%	18.1	9.4	27.52	0.51
D2	60	2.10%	54	6	0.076	1.26%	133.8	53.5	3010	3211	566.8	0.530	23.2%	417	98.2%	18.0	9.2	27.21	0.50
D3	70	2.05%	70	6	0.063	1.05%	88.1	35.2	3009	3271	716.5	0.888	22.7%	417	98.1%	18.5	9.3	27.74	0.40
D4	70	2.05%	70	10	0.055	0.55%	76.8	31.5	3010	2884	717.9	1.247	22.1%	417	98.2%	19.4	8.9	28.26	0.40
D5	70	1.77%	70	10	0.055	0.55%	89.2	36.6	3010	3390	618.6	1.557	22.7%	417	97.8%	19.1	9.4	28.50	0.41
D6	70	1.81%	70	10	0.047	0.47%	74.5	30.6	3010	3211	633.6	1.873	18.6%	417	97.9%	20.0	9.2	29.20	0.42

Table 3: Data Assessment

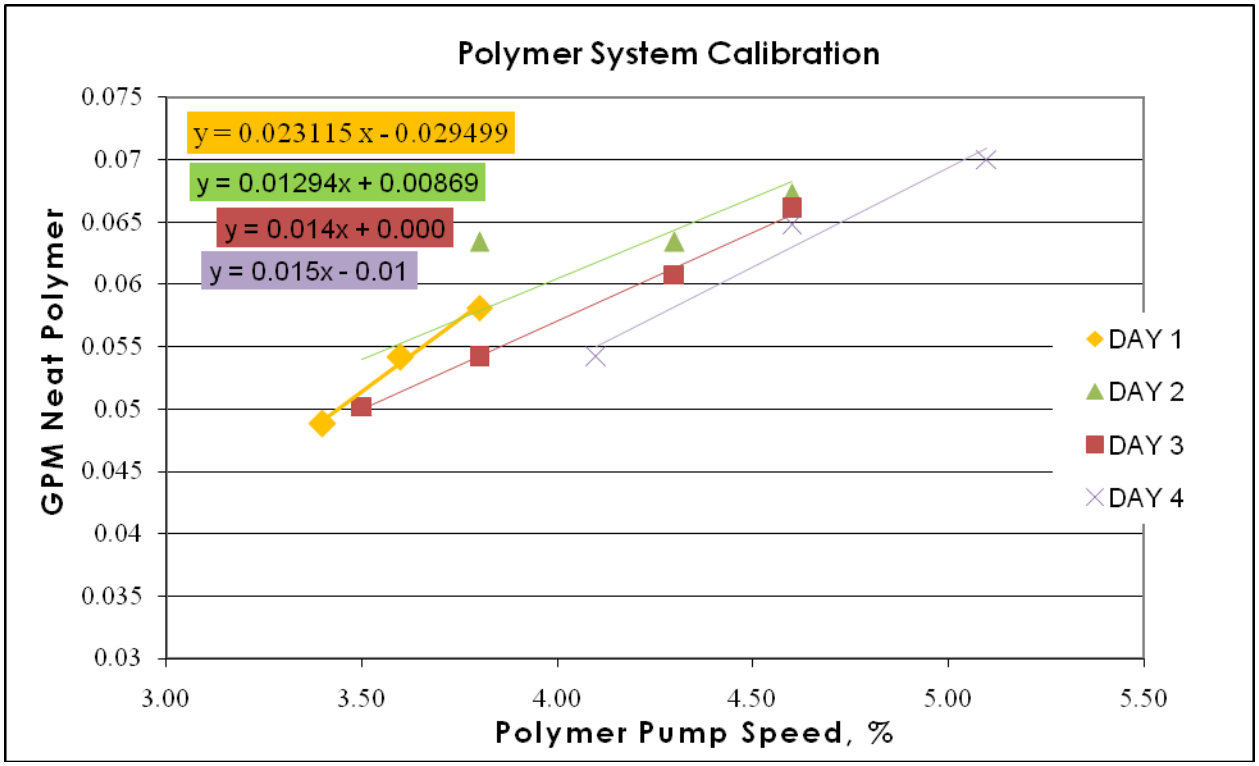

Figure 1: Daily Polymer Pump Dose Calibration

APPENDIX B:

Additional Test Trailer Information

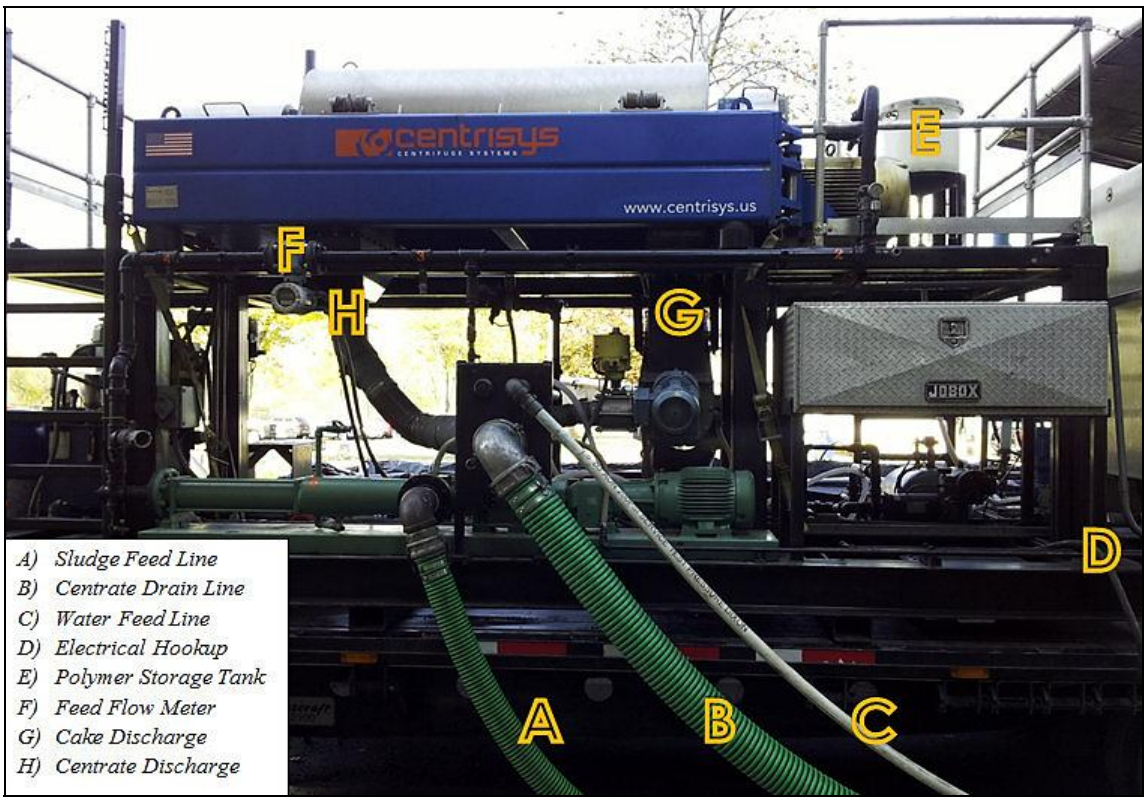

Figure 1: Key components of the pilot test trailer

Figure 2: Various polymer injection points

Figure3: Sludge Feed Flow

APPENDIX C:

Howard F. Curren Site &Process Information

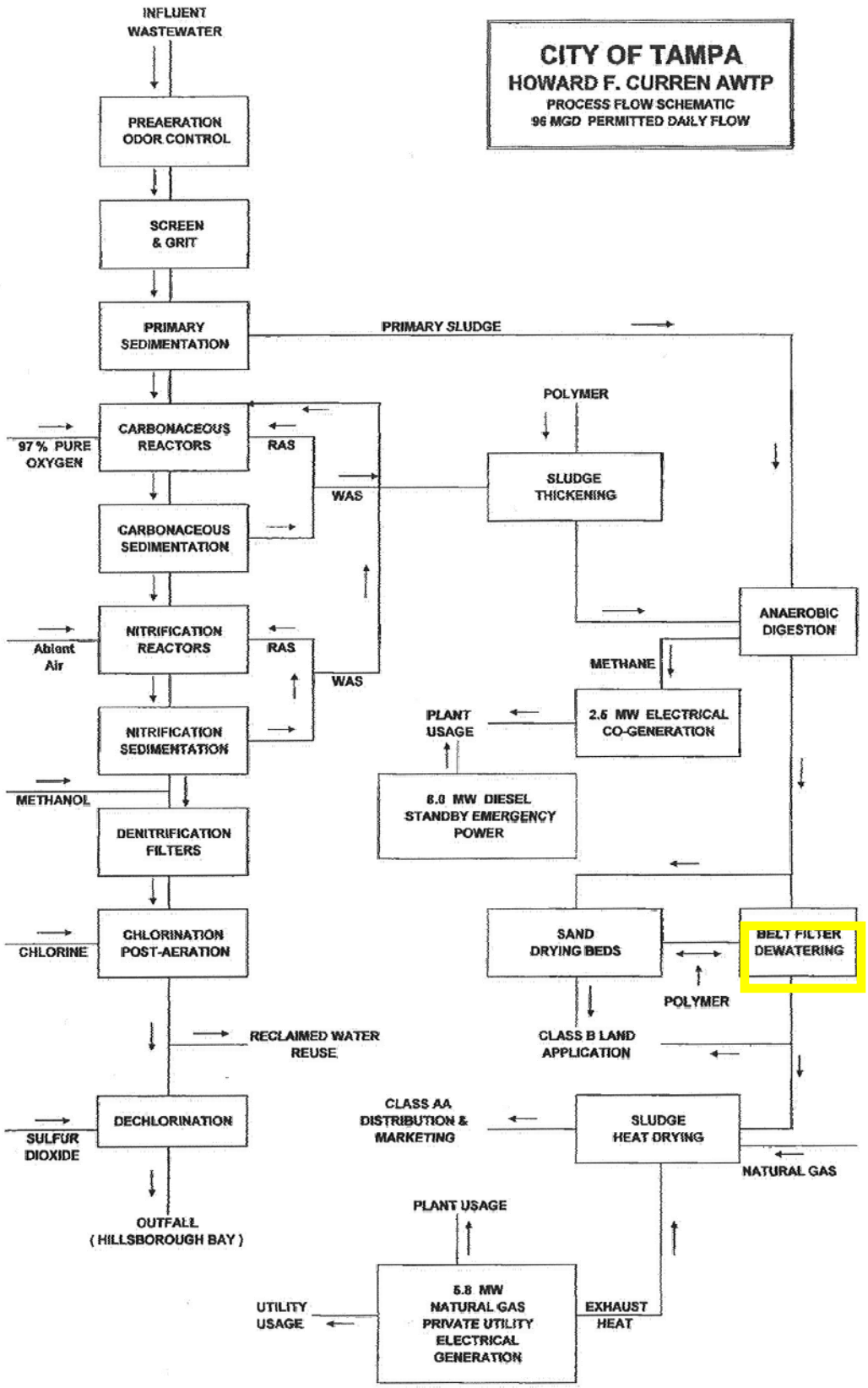

Figure 1: Howard Curren Process Flow

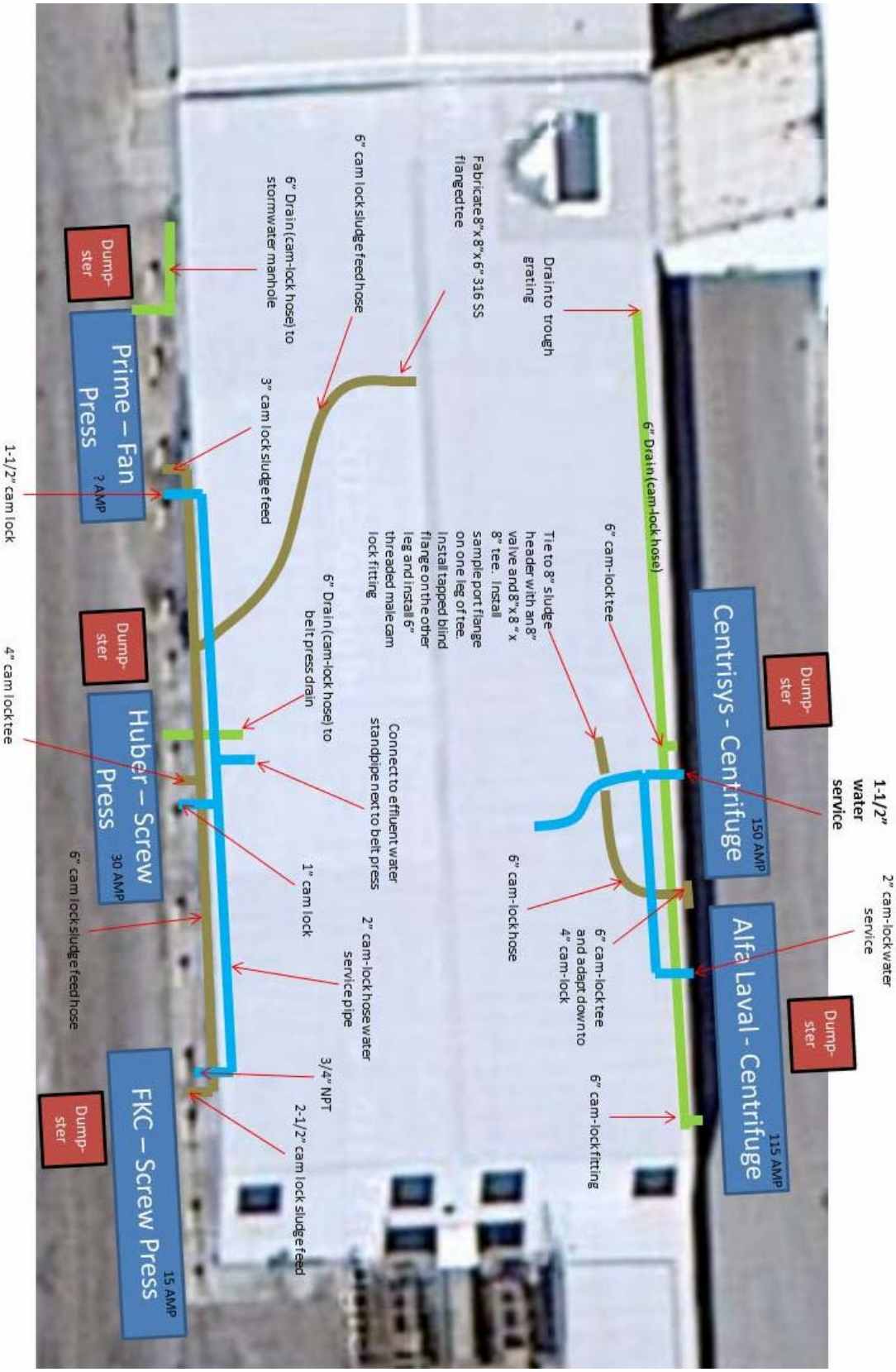

Figure 2: Site Connections

APPENDIX D:

CS26-4 Drawings

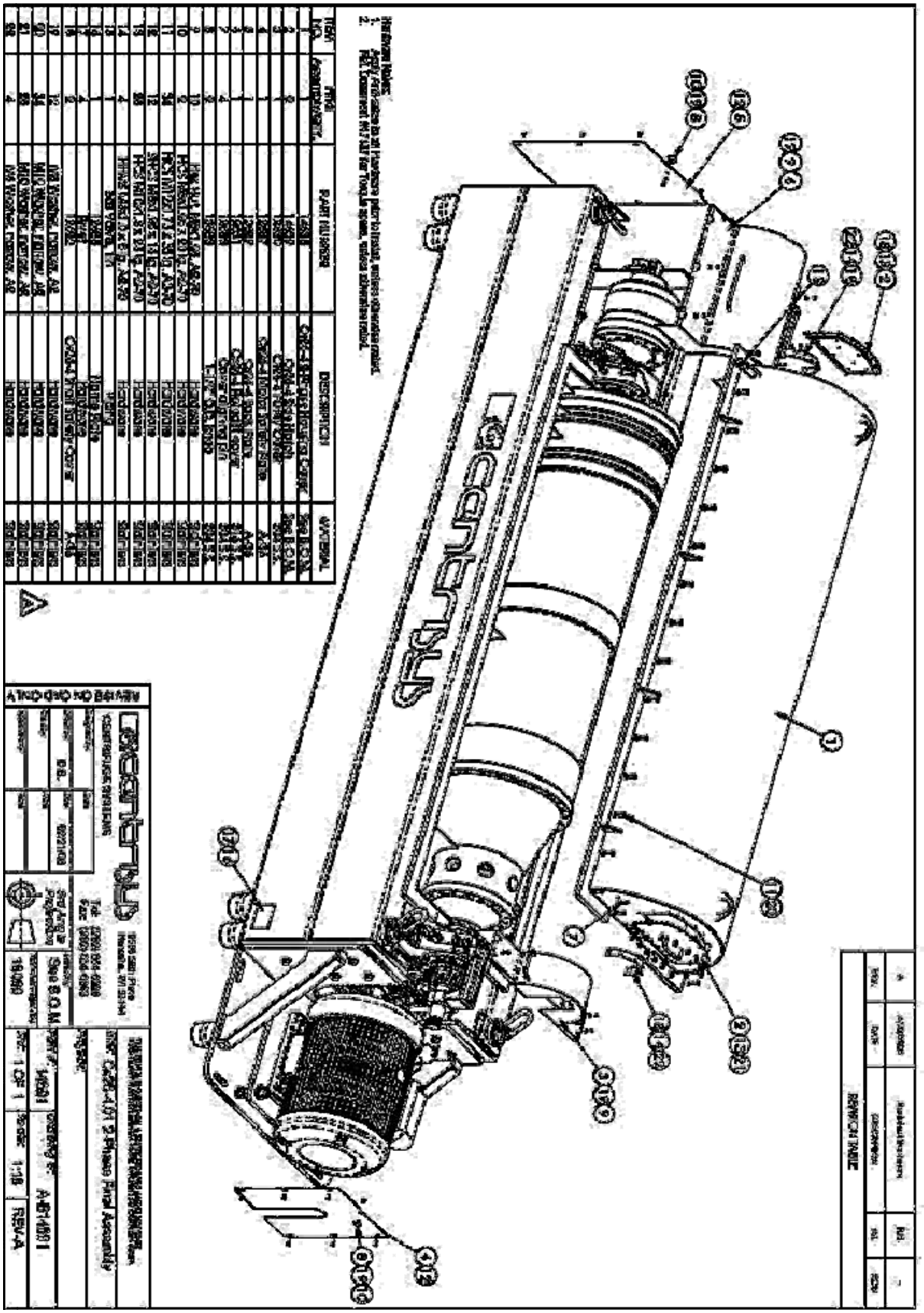

centrisys
CENTRIFUGE SYSTEMS

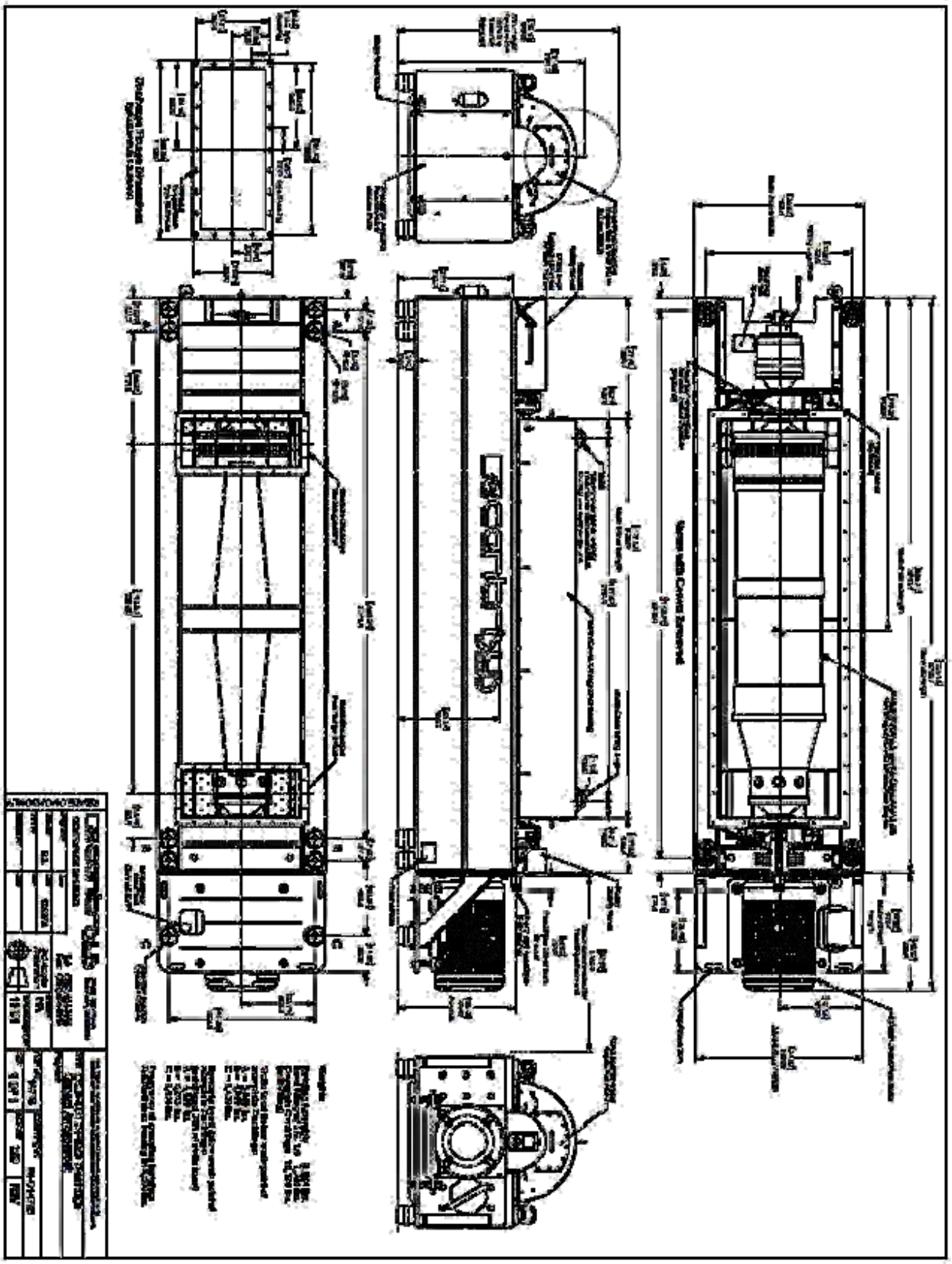

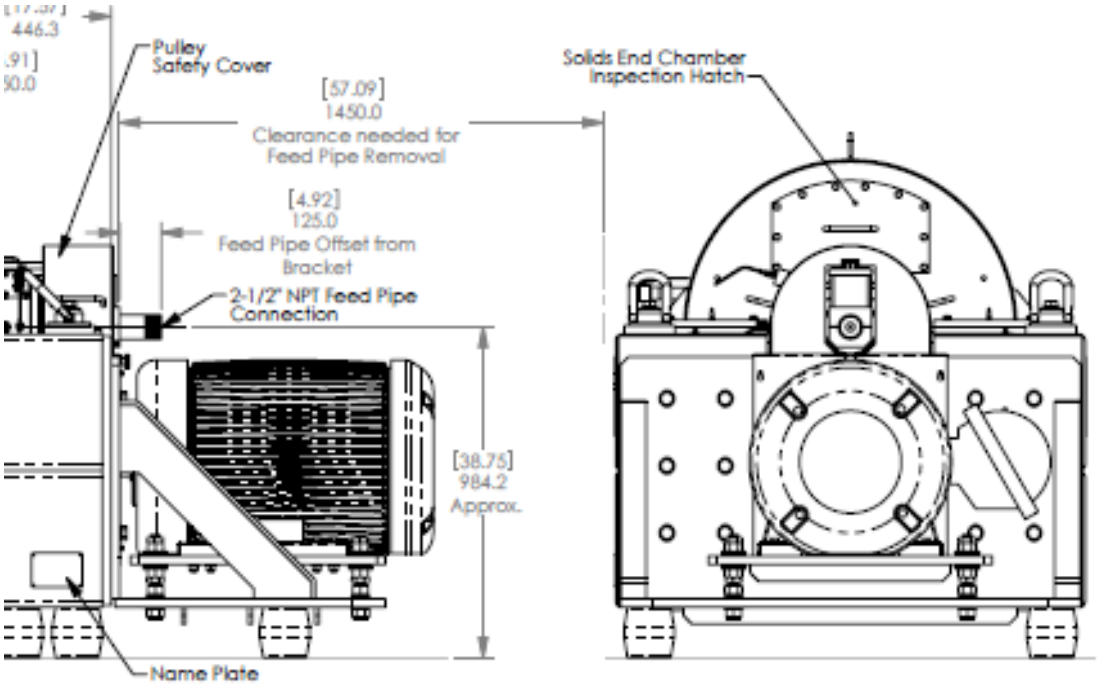

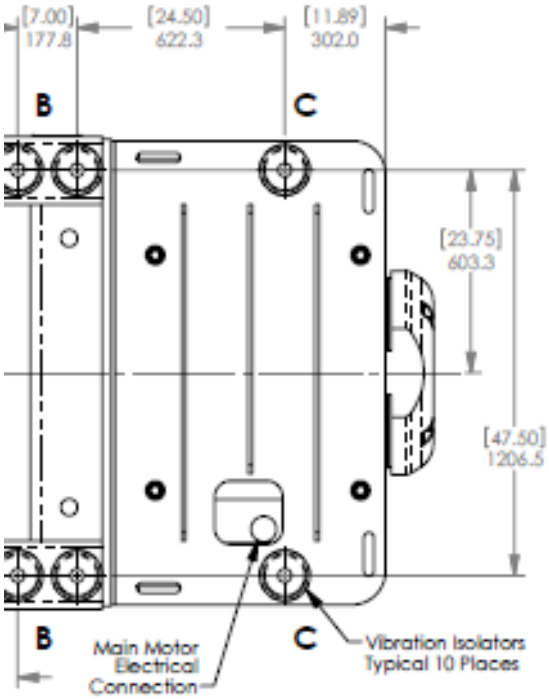

Weights:

Rotating Assembly	8,054 lbs.
Bowl Filling w/S.G. 1.0	1,328 lbs.
Complete Centrifuge (with filling)	18,100 lbs.

Static Load Below each point of complete Centrifuge:
A = 3,840 lbs.
B = 4,060 lbs.
C = 1,150 lbs.

Dynamic Load Below each point of complete Centrifuge:
(additional 25% of static load)
A = 4,800 lbs.
B = 5,075 lbs.
C = 1,438 lbs.

Frequency of mounting isolators:
0.83Hz @ max loading of 6,500 lbs.

Note A, B, C shown on next page

centrisys
CENTRIFUGE SYSTEMS

9586 58th Place
Kenosha, WI 53144

Tel: (262) 654-6006
Fax: (262) 654-6063

THIS PRINT IS PROVIDED ON A RESTRICTED BASIS AND IS NOT TO BE USED IN ANY WAY DETRIMENTAL TO THE INTERESTS OF CENTRISYS CORP.

Title:	Cs26-4.01 2-Phase Centrifuge General Arrangement		
Project:			
Part #: 14715	Drawing #: M-C14715		
Sht: 1 OF 1	Scale: 1:20	REV	

D.S. 02/22/08

3rd Angle Projection

Material(s): NA

Estimated weight (lbs): 18100

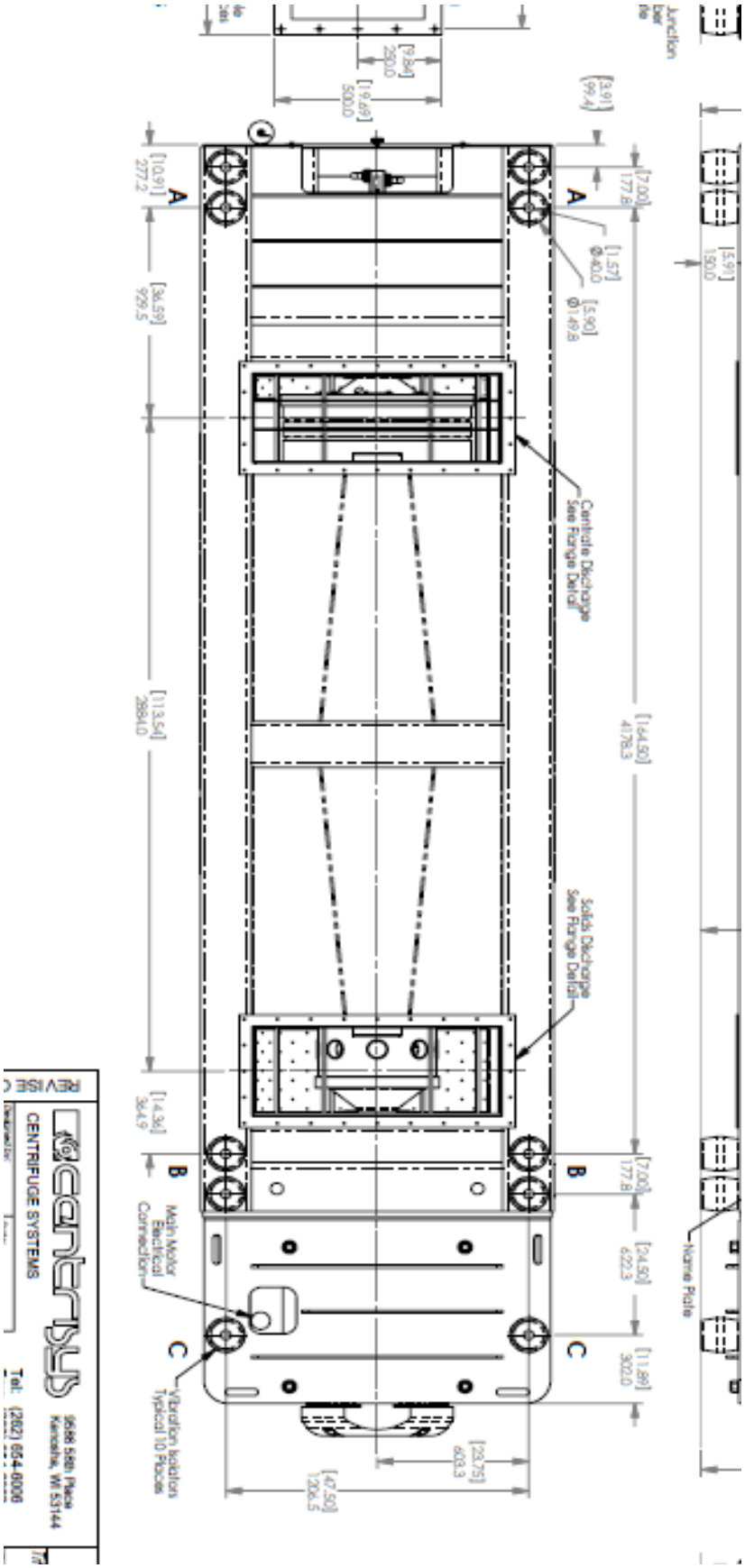
Name Plate
[5.91]
150.0
[24.50]
622.3
[7.00]
177.8
[11.80]
300.0
[23.75]
603.3
[47.50]
1206.5
[7.00]
177.8
[164.50]
4178.3
[3.91]
(99.4)
[1.57]
Ø40.0
[5.90]
Ø149.8
Centrate Discharge
See Flange Detail
Solids Discharge
See Flange Detail
[9.84]
250.0
[19.69]
500.0
[10.91]
277.2
[36.59]
929.5
[113.54]
2884.0
[14.36]
364.9
Main Motor
Electrical
Connection
Vibration Isolators
Typical 10 Places
A
B
C
centrisys
CENTRIFUGE SYSTEMS
9566 58th Place
Kenosha, WI 53144
Tel: (262) 654-6006
REVISE

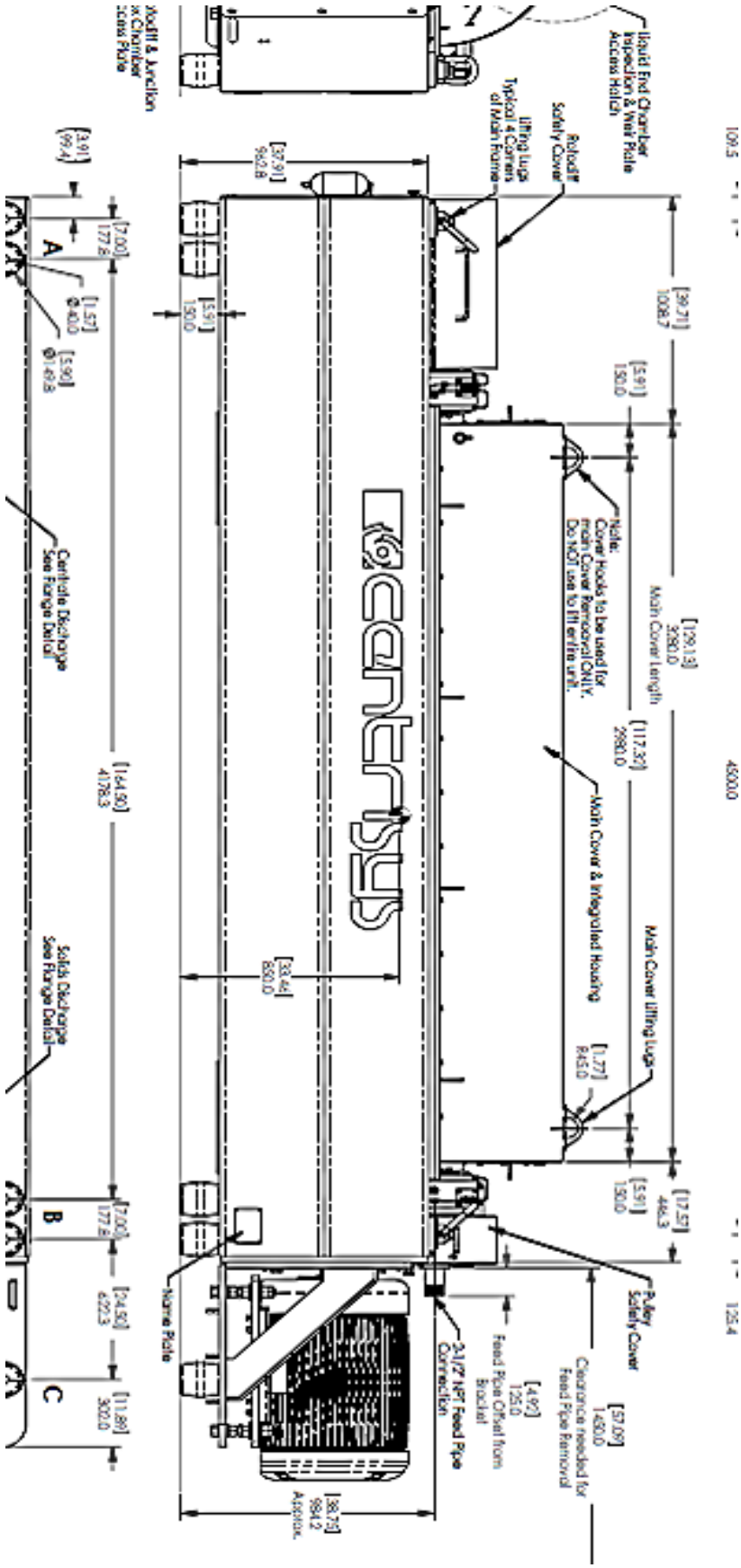
Liquid End Chamber Inspection & Wear Plate Access Hatch
Rolloff Safety Cover
Lifting Lugs Typical 4 Corners of Main Frame
Rolloff & Junction Box Chamber Access Plate
[39.71] 1008.7
[5.91] 150.0
[129.13] 3280.0
Main Cover Length
[117.32] 2980.0
Note: Cover Hooks to be used for main Cover Removal ONLY. Do NOT use to lift entire unit.
Main Cover & Integrated Housing
Main Cover Lifting Lugs
[1.77] 45.0
[5.91] 150.0
[17.57] 446.3
Pulley Safety Cover
[57.09] 1450.0
Clearance needed for Feed Pipe Removal
[4.92] 125.0
Feed Pipe Offset from Bracket
2 1/2" NPT Feed Pipe Connection
Name Plate
[36.75] 934.2
Approx.
[33.46] 850.0
[37.91] 962.8
[5.91] 150.0
[64.90] 4178.3
[24.50] 622.3
[11.89] 302.0
[7.00] 177.8
[3.91] 99.4
[1.57] Ø40.0
[5.90] Ø149.8
Centrate Discharge See Flange Detail
Solids Discharge See Flange Detail
A
B
C
4500.0
109.5
125.4

Proposal

No. 3474

Date: 06/12/2013

9586 58th Place, Kenosha, WI 53144

Phone: (262) 654-6006; Fax: (262) 764-8705

www.Centrisys.usinfo@Centrisys.us

Patrick Johnson
Manager- Southeast
(262) 748-3466 **direct**
9586 58th Place
Kenosha, WI 53144
Phone: (877) 339-5496
Patrick.johnson@centrisys.us

Project Name: Howard Curren AWTP

Contact Name: Jacob Porter, PE

Project Location: Tampa, FL.

Centrifuge Type: CS26-4 2Ph Centrifuge

Quantity:2 (two)

HAZEN AND SAWYER
Environmental Engineers & Scientists

WISCONSIN MANUFACTURER OF THE YEAR

An ISO 9001:2008 Company

Confidential document. All rights reserved. No duplication or disclosure to third parties permitted without the written consent of Centrisys Corporation

QUOTE No.3474

June, 12, 2013

Jacob L. Porter, PE
Hazen and Sawyer, PC
10002 Princess Palm Ave., STE 200
Tampa, Florida 33619
P: (813) 630-4498

Re: Proposal for 2 (two) CS26-4 2Ph dewatering centrifuges.

Dear Jacob:

Per your request, please find below the pricing proposal for our CS 26-4 2PH centrifuge.

If you have any further questions, please do not hesitate to contact me at (262) 748-3466.

Sincerely,

Patrick

Cc: Cory Peavy-Tom Evans Environmental.

Patrick Johnson
Manager- Southeast
Centrisys Centrifuge & Thickening Systems
(262) 748-3466 **direct**

CORPORATE HEADQUARTERS:
9586 58th Place
Kenosha, WI 53144
Phone: (877) 339-5496
Fax: (262) 764-8705
http://centrisys.us

INTRODUCTION

Centrisys Corporation

Centrisys is one of the world's most respected centrifuge manufacturers, literally building the company up from "feet on the ground" service. A quarter century ago the world's largest centrifuge manufacturers turned to Centrisys to service their equipment installed in the United States. Our engineers benefitted from problem-solving our competitions' municipal and industrial applications – learning first-hand what works and what doesn't in the real world.

Our working knowledge of the centrifuge and centrifugal process, along with our manufacturing know-how give us a leading edge in every aspect of centrifuge service and repair. Centrisys started as a repair and service facility and for the last 25 years we have been servicing, repairing, maintaining, consulting and optimizing EVERY brand of decanter centrifuges. Service remains the cornerstone of our business. With service centers in the United States, Europe, China and South America, you are never far from factory support and parts.

Centrisys' Engineering and Research & Development teams are second to none. The goal is and always has been to maximize customer payback while minimizing customer effort. Centrisys designs every machine to not only fulfill, but go beyond our customer's expectations. This is why a Centrisys centrifuge has more premium standard features than any other decanter manufactured today. Our Centrifuges can be customized for unique application requirements.

The Centrisys team continues to use this unequaled field experience to design the most reliable range of high-performance decanter centrifuges in the market today. Centrisys repairs and services every make and model of decanter centrifuge manufactured in the world, combining smart solutions with modern technology…simply!

CentrisysCS26-4 2PH/3P Dewatering Centrifuge

Process Description:

- CS26-42PH/3PH Centrifuge. This is a solid bowl centrifuge that continuously separates one liquid and one solid. The centrate is discharged over an adjustable weir plate under free flow. The weir plate adjustment is necessary for optimizing. The oil or light phase is discharged through adjustable nozzle. All wetted parts are manufactured of stainless steel. Parts that are not in contact with the product are painted.

SCOPE OF SUPPLY AND SERVICES

The following are the specifications for the CS26-4 centrifuge.

Dewatering centrifuge

Qty of 1

One **Centrisys** decanter centrifuge of the type **CS26-4** complete with automatic hydraulic backdrive.
Bowl speed adjustable from 0 - 2850 RPM (G-force 3000)
The **CS26-4** is a solid bowl centrifuge that continuously separates one liquid and one solid
The centrate is discharged over an adjustable weir plate under free flow. The weir plate adjustment is necessary for optimizing.
All wetted parts are manufactured of stainless steel. Parts that are not in contact with the product are painted

Colors:	Base frame is Centrisys Blue Covers are Stainless Steel
Seals:	BUNA
Scroll:	The OD is machined Wear protection: Feed nozzles are field replaceable TC Bushings Flights are protected with TC tiles
Bowl:	All the parts are cast of Duplex Stainless Steel Bowl dimensions: ID: 660mm Length inside: 2,840mm L: D Ratio: 4.3:1 Wear protection: Cake discharge is protected with field replaceable TC Bushings The entire bowl is protected with wear strips
Housing:	Fabricated of stainless steel
Cake discharge:	Wear plates are installed into the housing
Frame:	Manufactured of carbon steel. The frame is sandblasted and painted.

	Supported with vibration isolators.
Safety guards:	All rotating parts are protected with OSHA guards.
Lubrication system:	Forced oil/air automatic lubrication system.
Main drive:	Electro motor with frequency converter 125HP, 460V, 60HZ, 1750 RPM will be supplied
Back drive:	Automatic hydraulic backdrive Hydraulic motor mounted on machine Hydraulic pump unit separately mounted 40HP, 460V, 60HZ, 1800 RPM will be supplied
Field Service:	Installation three (3) man-days. Field and functional testing two (2) man days. Vendor training two (2) man days.

Tools and Lubrication

Tools for the normal operation and service will be supplied. All the lubricants needed for the first two-month period will also be supplied.

The centrifuge is equipped with the following:

One Frequency converter for the following reasons

A) The main speed can be corrected and changed during operation
B) The VFD maintains a slow start without the current rush
C) The VFD is designed for the **CS26-4** and tested with the unit

One automatic hydraulic backdrive

The hydraulic motor is of the type 1080T and the hydraulic pump is of the type B/C 30-60K.

The hydraulic backdrive will prevent the blockage of the centrifuge and maintains the differential speed in accordance with the torque that is created from the scroll transporting the solids.

Speed / Differential speed readout

A microprocessor controller will control the differential speed and adjusts as needed. All needed information such as bowl speed, differential speed and torque is displayed.

Control panel

We will supply a Nema 4X **stainless steel** control panel with the VFD installed inside and all the interlocks needed for the operation.

Included with the control panel are all the starters for the hydraulics, all the interlocks for the system, Allen Bradley PLC and the microprocessor for the backdrive system.

Shipping Weight 18,000 pounds each

PRICING

CS26-4 2Ph Centrifuge/Backdrive& Control Panel= **$588,000.00 each**

Quantity x 2
Grand Total = **$1,176,000.00**

TERMS:

Terms:	40% with order 50% with shipment 10% after start up but not later than 90 days
Delivery:	(4) Month from date of order.
FOB:	Kenosha, WI
Warranty:	One (1) year from start up or eighteen (18) months from delivery on labor and material.

FKC

FKC CO., LTD.

2708 West 18th Street
Port Angeles, WA 98363

(360) 452-9472
FAX (360) 452-6880

May 31, 2013

Jacob Porter
Hazen and Sawyer
Tampa, FL

Phone: 813-630-4498

Email: jporter@hazenandsawyer.com

RE: FKC Pilot Sludge Dewatering Trial Report

Dear Jacob:

On behalf of FKC, I thank you for your interest in FKC's dewatering equipment and the opportunity to demonstrate its capabilities at the Tampa Wastewater Treatment Plant.

Primary Purposes of the On-Site Dewatering Trial

The three primary purposes of the on-site trial are:

(1) To introduce and demonstrate the applicability of FKC Screw Press technology for your application.

(2) To verify performance and to gather data to assist FKC in the scale up and design of full-scale equipment for possible use in this application.

(3) To provide you an opportunity to observe and assess the potential operational, maintenance, and performance benefits of FKC Screw Press technology in this application.

Overview of the FKC On-Site Trial Unit

General Layout and Process Flow

A simple drawing showing major external dimensions of the trial unit trailer is enclosed for your reference. In addition, a general arrangement drawing of the trial unit equipment and a basic flow diagram of the system also are enclosed for your reference.

Sludge Feed to the Trailer

For this pilot study, the delivered sludge was pumped from the digester into the holding tank located at the rear of the trailer. Prior to beginning each trial run the precise level of sludge in the tank was measured. At the completion of each trial run the level of sludge remaining in the tank was measured.

The difference between the starting and ending tank levels equaled the volume of sludge pumped to the trial unit screw press during each trial run. This information, together with sludge

consistency, polymer dosage, and percent polymer makedown information was used by FKC to determine polymer consumption on a dry pounds per bone-dry ton of sludge basis.

Sludge Feed Out of the Sludge Holding Tank

Sludge was pumped with a positive displacement pump out of the sludge holding tank and into the flocculation tank located in the middle of the trailer, just in front of the screw press. The sludge flow was controlled with variable frequency drive.

Polymer Feed

Polymer was made down in and pumped out of the polymer tank. The tank was filled with the polymer used as a flocculant. A variable speed diaphragm-type polymer pump was used to pump polymer from the polymer tank into the flocculation tank.

Prior to beginning each trial run the precise level of polymer in the polymer tank was measured and recorded. At the completion of each trial run, the level of the polymer remaining in the tank was measured and recorded. The difference between the starting and ending tank levels equaled the volume of polymer used during each trial run.

Flocculation

The flocculation tank has two separate, individually agitated chambers. Polymer was added to the sludge before the 2nd chamber of the flocculation tank. As the sludge / polymer mixture moved up through the chamber (in a bottom-to-top direction) additional agitation and time were used to complete the flocculation process. The flocculated sludge overflowed the flocculation tank chamber though a stainless steel trough and flowed into the headbox of the trial unit screw press.

Screw Press Headbox Level Control

The screw press was run continuously at a constant speed and stable headbox level for 30 minutes prior to, and for the duration of each timed trial run. The screw press headbox level was controlled between the maximum and minimum headbox level set points by automatic on-off operation of the sludge and polymer pumps. A three-electrode headbox level controller automatically switched on the sludge pump, polymer pump, and flocculation tank agitator when the minimum headbox level was reached. When the level of sludge in the headbox reached the maximum level, the sludge pump, polymer pump, and flocculation tank agitator would switch off.

Dewatered Cake Solids

During each timed trial run, all of the dewatered cake solids discharged from the screw press were collected in a white plastic bin placed directly beneath the discharge box of the screw press. The bin was emptied prior to the start of each trial run. At the end of each trial run, the bin containing the dewatered cake solids was weighed on a scale and the weight of the empty bin was subtracted to determine the weight of the cake solids dewatered and discharged from the press during each trial run.

After weighing the bin, samples of dewatered cake solids were collected from random locations throughout the bin. The samples were used for consistency analysis utilizing moisture meters located in the laboratory area. Samples were also given to the plant for additional testing of cake dryness.

Overview of the On-Site Trial

The fundamental design and operating parameters having the most direct impact on the dewatering performance of FKC Screw Press technology in this application are the screw speed, polymer addition and screw design. The on-site trial consisted of a series of separate timed trial runs. Each of the trial runs had a specific purpose related to identifying and quantifying one or more of the effects of these fundamental design and operating parameters on dewatering performance.

Prior to each trial run the trial unit screw press was set up to run under the specific operating parameters established for the particular trial run (e.g. screw design, screw speed, polymer dose, etc.). Once the operational parameters were established, the trial unit was operated under stable conditions until steady state performance was achieved. After steady state performance was achieved, the unit was temporarily stopped while it was washed down, sludge and polymer tank levels were recorded, and the plastic bin beneath the discharge box of the screw press was emptied.

Each trial run was made by operating the trial unit screw press under the known, stable operating parameters established for the particular run for a period of 15-25 minutes. The operating parameters for each trial run were recorded, and at appropriate times prior to, during, or after each trial run operating data and samples were collected.

Successive trial runs were made after a change in one of the design or operational parameters (e.g. a faster or slower screw speed, a different polymer dosage, etc.) to determine the effect of the change made.

Summary of On-Site Trial Runs

A summary of the data collected is contained in the FKC on-site trial data sheets enclosed with this report. All inlet and outlet consistency %'s used for calculations, are averages of FKC onsite tests and Tampa lab tests (if available). Polymer dosage (active) and dry solids throughput are calculated for each run. Ash content and % capture are shown for all runs where this data was supplied. Note: the average Ash content for all samples (15) was 25.1%. Also, the average capture % for all samples (12) was 98.16%

Following is a summary of the objectives of 24 trial runs performed on March 19th – 22nd, 2013 and observations made during the runs. All tests were performed with a single stage, mid compression, Teflon coated screw (screw design "1003"). The Emulsion polymers used during the trial were Ashland K279FLX and Ciba 7878 emulsion polymer.

<u>TRIAL 1 (9:00AM 3/19/13)</u>

TRIAL 1 was performed on the Tampa WWTP anaerobically digested municipal sludge with screw design "1003" at a screw speed of 0.3 rpm using Ashland K279FLX polymer. It was observed that the sludge was slightly overdosed with polymer on this run.

<u>TRIAL 2 (10:00AM 3/19/13)</u>
TRIAL 2 was made under the same operating conditions as TRIAL 1, but the polymer dose was reduced slightly.

<u>TRIAL 3 (11:00AM 3/19/13)</u>
TRIAL 3 was made under the same operating conditions as TRIAL 2, but at a screw speed of 0.5 rpm. This change was to see how faster operating speeds affect the outlet consistency and capacity of the screw press. Typically, with an increased screw speed, outlet consistency will decrease while capacity increases.

<u>TRIAL 4 (12:00PM 3/19/13)</u>
TRIAL 4 was made under the same operating conditions as TRIAL 3, but the polymer pump speed was reduced slightly.

<u>TRIAL 5 (1:00 PM 3/19/13)</u>
TRIAL 5 was made under the same operating conditions as TRIAL 4, but at a screw speed of 0.75 rpm.

<u>TRIAL 6 (2:00 PM 3/19/13)</u>
TRIAL 6 was made under the same operating conditions as TRIAL 5, but the screw speed was slowed back down to 0.5 rpm.

This concluded the testing for the first day.

All the testing on the second day was performed under similar conditions to that of the first day but with a slightly longer straight length. Adjusting the straight length (the distance between the discharge and the end of the flight) changes pressure applied to the cake inside the screw press. This was done to increase backpressure on the cake and maximize discharge cake dryness

<u>TRIAL 7 (9:00AM 3/20/13)</u>
TRIAL 7 was performed at a screw speed of 0.3 RPM.

TRIAL 8 (10:00AM 3/20/13)
TRIAL 8 was made under the same operating conditions as TRIAL 7, but at a screw speed of 0.5 rpm.

TRIAL 9 (11:00AM 3/20/13)
TRIAL 9 was made under the same operating conditions as TRIAL 8, but at a screw speed of 0.75 rpm.

TRIAL 10 (12:00PM 3/20/13)
TRIAL 10 was made under the same operating conditions as TRIAL 7, but the polymer dose was reduced slightly.

TRIAL 11 (1:00PM 3/20/13)
TRIAL 11 was made under the same operating conditions as TRIAL 8, but the polymer dose was reduced slightly.

TRIAL 12 (2:00PM 3/20/13)
TRIAL 12 was made under the same operating conditions as TRIAL 9, but the polymer dose was reduced slightly.

This concluded the testing for the second day.

For the 3rd and 4th days of testing, the polymer was switched to Ciba 7878 (linear) polymer due to the very high dosage required by the 279 FLX (cross-link) polymer.

TRIAL 13 (9:00AM 3/21/13)
TRIAL 13 was performed at a screw speed of 0.3 RPM.

TRIAL 14 (10:00AM 3/21/13)
TRIAL 14 was made under the same operating conditions as TRIAL 13, but at a screw speed of 0.5 rpm.

TRIAL 15 (11:00AM 3/21/13)
TRIAL 15 was made under the same operating conditions as TRIAL 14, but at a screw speed of 0.75 rpm.

TRIAL 16 (12:00PM 3/21/13)
TRIAL 16 was made under the same operating conditions as TRIAL 13, but the polymer dose was reduced slightly.

TRIAL 17 (1:00PM 3/21/13)
TRIAL 17 was made under the same operating conditions as TRIAL 14, but the polymer dose was reduced slightly.

TRIAL 18 (2:00PM 3/21/13)
TRIAL 18 was made under the same operating conditions as TRIAL 15, but the polymer dose was reduced slightly.

This concluded the testing for the third day.

It was observed on day three that TRIALS 16-18 were at bare minimum polymer dosage, and TRIALS 13-15 were at a generous/maximum polymer dosage. All tests performed on day 4 were conducted at a mid-range polymer dosage.

TRIALS 19 & 20 (8:00AM & 9:00AM 3/22/13)
These TRIALS were performed at a screw speed of 0.3 RPM.

TRIALS 21 & 22 (10:00AM & 11:00AM 3/22/13)
These TRIALS were performed at a screw speed of 0.5 RPM.

TRIALS 23 & 24 (12:00PM & 1:00PM 3/22/13)
These TRIALS were performed at a screw speed of 0.75 RPM.

This concluded ALL testing.

Conclusions

During the on-site trials, FKC identified some critical factors necessary for optimizing screw press performance:

- Cross-Link polymer yields a stronger floc and better dryness, but at a very high dosage rate.
- Required polymer dosage for linear polymer is 38-39 active lbs/dry ton.
- Estimated outlet dryness for Full Size equipment using linear polymer is 17%.

FKC's revised equipment proposal, based on this data, is attached.

Regards,
FKC Co., Ltd.

Shane Harvey

Scale Up Calculations

The FKC screw press is **custom built for each application**. While the screw diameter and length are of standard designs (Class "A" capable SHX or non-Class "A" BHX), the screw design will be different. Each sludge application is unique and therefore, the screw press size, capacity, and performance will vary. Designing a full size press is based on;

- lab testing
- on-site testing
- FKC operating experience with similar sludge applications throughout North America

In general the basic design parameters FKC evaluates for each application are;

- Type of sludge being dewatered
- Sludge dewatering characteristics, including ash & fiber
- Gravity dewatering rate
- On-site & lab test data
- Discharge dryness required
- Thruput capacity
- Capture efficiency

Based on the above, the variables that FKC uses to size a press and design the screw are;

- Inlet volume
- Gravity dewatering rate at inlet end of press
- Screw RPM
- Compression ratio.

To scale up from an on-site test FKC does the following between the test press and full size press;

- Calculate the surface area ratio.
- Calculate the inlet volume ratio.
- Evaluate the test press performance between different screw speeds.

Using the above in a propriety sizing spreadsheet formula, FKC calculates the full size press speed at each corresponding test press speed value. Using the calculated full size press speed, the inlet volume, the expected inlet consistency of the sludge, and the sludge gravity dewatering rate, the thruput capacity of the full size press is determined.

FKC's vast experience, in dewatering all types of sludge worldwide, enables us to determine if the full size press selected is the correct design for this application. The bottom line is FKC must be 100% confident that the full size press selected will meet all the plant specified performance requirements.

SCREW PRESS ON-SITE
TRIAL DATA SHEET

TRIAL DATE:	19-Mar-13					
LOCATION:	Tampa, FL					
PERFORMED BY:	Shane					
SCREW SPECS:	Screw "1003"					All poly flow before 1st tank
SLUDGE TYPE:	Anaerobic					
SLUDGE FIBER CONTENT %						
SLUDGE ASH CONTENT %						active
POLYMER TYPE	Ashland K279FLX		0.50%			46%
LIME TYPE						
SLUDGE TANK VOLUME (liter/mm)	0.5525	Liters / mm	440 L			tanks
POLY TANK VOL (liter/mm)	0.2025	Liters / mm	170 L			tanks
TRIAL I.D.#	9:00 AM	10:00 AM	11:00 AM	12:00 PM	1:00 PM	2:00 PM
Date	3/19/13	3/19/13	3/19/13	3/19/13	3/19/13	3/19/13
Screw RPM	0.30	0.30	0.50	0.50	0.75	0.50
Straight Length (mm)	105	105	105	105	105	105
Amps	2	2	2	2	2	2
Inlet pH	8.5	8.5	8.5	8.5	8.5	8.5
Test Duration. minutes	20	20	25	20	11	25
SP Wet Cake Weight (kgs)	13.6	14.1	26.9	14.6	18.1	17.1
Sludge Tank Level @ Start (mm)	275	135	300	100	210	135
Sludge Tank Level @ Finish (mm)	650	440	760	400	580	530
Poly Tank #1 Level @ Start (mm)	385	365	80	530	550	460
Poly Tank #1 Level @ Finish (mm)	760	590	470	780	850	800
Inlet Consist (FKC)	1.95%	1.77%	1.82%	1.79%	1.76%	1.74%
Inlet Consist (Tampa)	X	X	X	X	X	X
Inlet Consist (AVG)	1.95%	1.77%	1.82%	1.79%	1.76%	1.74%
Filtrate TSS (mg / L)	2270	41	21.5	228	406	56.5
Big Poly Pump Stroke Length	35-40	35	30	22	56	56
Sludge Pump setting(Hz)	10.0	10.0	10.0	10.0	15.0	15.0
Consistency @ Headbox % (FKC)	7.23%		7.97%			
SP Outlet Cons.% (FKC TRAIL LAB)	18.10%	22.94%	18.18%	16.44%	18.38%	20.88%
SP Outlet Cons.% (Tampa LAB)	18.70%	23.50%	18.00%	13.70%	17.90%	21.90%
SP Outlet Cons.% Average	18.40%	23.22%	18.09%	15.07%	18.14%	21.39%
Sludge Diff. Level Used (mm)	375	305	460	300	370	395
Sludge Flow (LPM)	10.36	8.43	10.17	8.29	18.58	8.73
Sludge Flow (GPM)	2.74	2.23	2.69	2.19	4.91	2.31
Sludge Flow (dry lbs/hr)	26.70	19.71	24.46	19.61	43.24	20.08
Polymer #1 Diff. Level Used (mm)	375	225	390	250	300	340
Polymer #1 Flow (LPM)	3.80	2.28	3.16	2.53	5.52	2.75
Polymer Dilution Water Flow (GPM)	1.00	0.60	0.83	0.67	1.45	0.72
Polymer #1 Flow (GPM)	1.00	0.60	0.83	0.67	1.46	0.73
Polymer #1 Flow (neat lbs/hr)	2.51	1.51	2.09	1.67	3.65	1.82
Polymer #1 Dosage (Active lb/DT)	86.46	70.27	78.54	78.49	77.67	83.40
Polymer #1 Dosage (Active kg/BDMT)	43.92	35.70	39.90	39.87	39.46	42.37
Outlet Cake kg/hr. Wet	40.80	42.30	64.44	43.80	98.73	41.04
Outlet Cake "Flow" (LPM)	0.68	0.71	1.07	0.73	1.65	0.68
Outlet Cake "Flow" (GPM)	0.18	0.19	0.28	0.19	0.43	0.18
Outlet Cake (dry kg/hr.)	7.51	9.82	11.66	6.60	17.91	8.78
Outlet Cake (dry lbs/hr.)	16.55	21.66	25.70	14.55	39.49	19.36
Estimated Washwater (gal/DT)	33.70	45.65	29.44	45.89	37.85	35.86
Ash %	X	X	X	X	X	X
Capture %	89.46%	99.79%	99.89%	98.88%	97.91%	99.70%

SCREW PRESS ON-SITE
TRIAL DATA SHEET

TRIAL DATE:	20-Mar-13					
LOCATION:	Tampa, FL					
PERFORMED BY:	Shane					
SCREW SPECS:	Screw "1003"					All poly flow before 1st tank
SLUDGE TYPE:	Anaerobic					
SLUDGE FIBER CONTENT %						
SLUDGE ASH CONTENT %						active
POLYMER TYPE	Ashland K279FLX		0.50%			46%
LIME TYPE						
SLUDGE TANK VOLUME (liter/mm)	0.5525	Liters / mm	440 L			tanks
POLY TANK VOL (liter/mm)	0.2025	Liters / mm	170 L			tanks
TRIAL I.D.#	9:00 AM	10:00 AM	11:00 AM	12:00 PM	1:00 PM	2:00 PM
Date	3/20/13	3/20/13	3/20/13	3/20/13	3/20/13	3/20/13
Screw RPM	0.30	0.50	0.75	0.30	0.50	0.75
Straight Length (mm)	125	125	125	125	125	125
Amps	2	2	2	2	2	2
Inlet pH	8.5	8.5	8.5	8.5	8.5	8.5
Test Duration. minutes	22	25	13.5	27	21	20
SP Wet Cake Weight (kgs)	15.2	26.4	22.4	18.5	22.7	32.4
Sludge Tank Level @ Start (mm)	90	65	50	65	70	265
Sludge Tank Level @ Finish (mm)	480	560	500	515	495	850
Poly Tank #1 Level @ Start (mm)	485	355	400	420	285	215
Poly Tank #1 Level @ Finish (mm)	860	820	840	770	600	650
Inlet Consist (FKC)	1.64%	1.73%	1.73%	1.76%	1.76%	1.75%
Inlet Consist (Tampa)	X	1.80%	1.79%	1.77%	1.78%	1.70%
Inlet Consist (AVG)	1.64%	1.77%	1.76%	1.76%	1.77%	1.73%
Filtrate TSS (mg / L)	31	35	70	187	350	806
Big Poly Pump Stroke Length	37.5	42	69	30	30	44
Sludge Pump setting(Hz)	10.0	10.0	15.0	10.0	10.0	14.0
Consistency @ Headbox % (FKC)					8.58%	
SP Outlet Cons.% (FKC TRAIL LAB)	22.30%	19.57%	18.74%	21.02%	18.87%	17.26%
SP Outlet Cons.% (Tampa LAB)	21.90%	18.60%	16.90%	23.90%	18.70%	17.30%
SP Outlet Cons.% Average	22.10%	19.09%	17.82%	22.46%	18.79%	17.28%
Sludge Diff. Level Used (mm)	390	495	450	450	425	585
Sludge Flow (LPM)	9.79	10.94	18.42	9.21	11.18	16.16
Sludge Flow (GPM)	2.59	2.89	4.87	2.43	2.95	4.27
Sludge Flow (dry lbs/hr)	21.23	25.55	42.87	21.47	26.13	36.89
Polymer #1 Diff. Level Used (mm)	375	465	440	350	315	435
Polymer #1 Flow (LPM)	3.45	3.77	6.60	2.63	3.04	4.40
Polymer Dilution Water Flow (GPM)	0.91	0.99	1.73	0.69	0.80	1.16
Polymer #1 Flow (GPM)	0.91	1.00	1.74	0.69	0.80	1.16
Polymer #1 Flow (neat lbs/hr)	2.28	2.49	4.36	1.74	2.01	2.91
Polymer #1 Dosage (Active lb/DT)	98.85	89.63	93.61	74.34	70.68	72.59
Polymer #1 Dosage (Active kg/BDMT)	50.22	45.54	47.56	37.77	35.91	36.88
Outlet Cake kg/hr. Wet	41.45	63.24	99.33	41.11	64.86	97.05
Outlet Cake "Flow" (LPM)	0.69	1.05	1.66	0.69	1.08	1.62
Outlet Cake "Flow" (GPM)	0.18	0.28	0.44	0.18	0.29	0.43
Outlet Cake (dry kg/hr.)	9.16	12.07	17.70	9.23	12.18	16.77
Outlet Cake (dry lbs/hr.)	20.20	26.61	39.03	20.36	26.86	36.98
Estimated Washwater (gal/DT)	38.53	28.18	31.10	31.05	32.80	24.39
Ash %	X	25.94%	24.11%	24.89%	24.55%	24.65%
Capture %	99.82%	99.82%	99.64%	99.02%	98.20%	95.78%

SCREW PRESS ON-SITE
TRIAL DATA SHEET

TRIAL DATE:	21-Mar-13					
LOCATION:	Tampa, FL					
PERFORMED BY:	Shane					
SCREW SPECS:	Screw "1003"					All poly flow before 1st tank
SLUDGE TYPE:	Anaerobic					
SLUDGE FIBER CONTENT %						
SLUDGE ASH CONTENT %						active
POLYMER TYPE	Ciba 7878		0.50%			50%
LIME TYPE						
SLUDGE TANK VOLUME (liter/mm)	0.5525	Liters / mm	440 L			tanks
POLY TANK VOL (liter/mm)	0.2025	Liters / mm	170 L			tanks
TRIAL I.D.#	9:00 AM	10:00 AM	11:00 AM	12:00 PM	1:00 PM	2:00 PM
Date	3/21/13	3/21/13	3/21/13	3/21/13	3/21/13	3/21/13
Screw RPM	0.30	0.50	0.75	0.30	0.50	0.75
Straight Length (mm)	105	105	105	105	105	105
Amps	2	2	2	2	2	2
Inlet pH	8.5	8.5	8.5	8.5	8.5	8.5
Test Duration. minutes	20	20	18.0	26	26	15
SP Wet Cake Weight (kgs)	13.2	21.9	29.5	17.6	29.4	24.1
Sludge Tank Level @ Start (mm)	170	55	70	180	65	120
Sludge Tank Level @ Finish (mm)	520	500	525	560	595	450
Poly Tank #1 Level @ Start (mm)	335	540	85	425	90	360
Poly Tank #1 Level @ Finish (mm)	495	760	305	545	275	470
Inlet Consist (FKC)	1.72%	1.82%	1.86%	1.73%	1.74%	1.78%
Inlet Consist (Tampa)	1.68%	1.72%	1.73%	X	1.69%	1.78%
Inlet Consist (AVG)	1.70%	1.77%	1.79%	1.73%	1.71%	1.78%
Filtrate TSS (mg / L)	X	X	X	X	X	X
Big Poly Pump Stroke Length	17	16-17	16	11.5	11.5	11.5
Sludge Pump setting(Hz)	12.2	12.2	12.2	11.0	11.0	11.0
Consistency @ Headbox % (FKC)	6.41%			5.62%		
SP Outlet Cons.% (FKC TRAIL LAB)	19.01%	17.85%	16.58%	16.96%	17.18%	15.19%
SP Outlet Cons.% (Tampa LAB)	17.50%	18.50%	17.50%	17.30%	17.20%	15.10%
SP Outlet Cons.% Average	18.26%	18.18%	17.04%	17.13%	17.19%	15.15%
Sludge Diff. Level Used (mm)	350	445	455	380	530	330
Sludge Flow (LPM)	9.67	12.29	13.97	8.08	11.26	12.16
Sludge Flow (GPM)	2.55	3.25	3.69	2.13	2.98	3.21
Sludge Flow (dry lbs/hr)	21.70	28.80	33.12	18.47	25.52	28.60
Polymer #1 Diff. Level Used (mm)	160	220	220	120	185	110
Polymer #1 Flow (LPM)	1.62	2.23	2.48	0.93	1.44	1.49
Polymer Dilution Water Flow (GPM)	0.43	0.59	0.65	0.25	0.38	0.39
Polymer #1 Flow (GPM)	0.43	0.59	0.65	0.25	0.38	0.39
Polymer #1 Flow (neat lbs/hr)	1.07	1.47	1.64	0.62	0.95	0.98
Polymer #1 Dosage (Active lb/DT)	49.34	51.13	49.39	33.45	37.32	34.32
Polymer #1 Dosage (Active kg/BDMT)	25.06	25.97	25.09	16.99	18.96	17.43
Outlet Cake kg/hr. Wet	39.60	65.55	98.33	40.62	67.73	96.40
Outlet Cake "Flow" (LPM)	0.66	1.09	1.64	0.68	1.13	1.61
Outlet Cake "Flow" (GPM)	0.17	0.29	0.43	0.18	0.30	0.42
Outlet Cake (dry kg/hr.)	7.23	11.91	16.76	6.96	11.64	14.60
Outlet Cake (dry lbs/hr.)	15.94	26.27	36.95	15.34	25.67	32.19
Estimated Washwater (gal/DT)	41.47	31.25	30.19	37.49	27.13	41.96
Ash %	26.49%	25.29%	25.23%	X	25.12%	26.23%
Capture %	X	X	X	X	X	X

SCREW PRESS ON-SITE
TRIAL DATA SHEET

TRIAL DATE:	22-Mar-13					
LOCATION:	Tampa, FL					
PERFORMED BY:	Shane					
SCREW SPECS:	Screw "1003"					All poly flow before 1st tank
SLUDGE TYPE:	Anaerobic					
SLUDGE FIBER CONTENT %						
SLUDGE ASH CONTENT %						active
POLYMER TYPE	Ciba 7878		0.50%			50%
LIME TYPE						
SLUDGE TANK VOLUME (liter/mm)	0.5525	Liters / mm	440 L			tanks
POLY TANK VOL (liter/mm)	0.2025	Liters / mm	170 L			tanks
TRIAL I.D.#	8:00 AM	9:00 AM	10:00 AM	11:00 AM	12:00 PM	1:00 PM
Date	3/22/13	3/22/13	3/22/13	3/22/13	3/22/13	3/22/13
Screw RPM	0.30	0.30	0.50	0.50	0.75	0.75
Straight Length (mm)	105	105	105	105	105	105
Amps	2	2	2	2	2	2
Inlet pH	8.5	8.5	8.5	8.5	8.5	8.5
Test Duration. minutes	20	20	17.0	21	15	15
SP Wet Cake Weight (kgs)	13.6	13.6	19.7	23.4	24.6	24.0
Sludge Tank Level @ Start (mm)	90	375	630	65	400	700
Sludge Tank Level @ Finish (mm)	375	630	940	440	700	1000
Poly Tank #1 Level @ Start (mm)	*525*	640	740	55	360	485
Poly Tank #1 Level @ Finish (mm)	640	740	860	205	485	600
Inlet Consist (FKC)	1.77%	1.76%	1.75%	1.86%	1.96%	1.92%
Inlet Consist (Tampa)	1.83%	2.10%	2.05%	2.05%	1.77%	X
Inlet Consist (AVG)	1.80%	1.93%	1.90%	1.96%	1.86%	1.92%
Filtrate TSS (mg / L)	X	X	X	X	X	X
Big Poly Pump Stroke Length	13	13	13	13	14	14
Sludge Pump setting(Hz)	11.0	11.0	11.0	11.0	11.0	11.0
Consistency @ Headbox % (FKC)	5.58%					
SP Outlet Cons.% (FKC TRAIL LAB)	17.02%	17.52%	17.20%	17.96%	14.29%	14.15%
SP Outlet Cons.% (Tampa LAB)	15.60%	17.30%	22.80%	10.90%	14.80%	14.90%
SP Outlet Cons.% Average	16.31%	17.41%	20.00%	14.43%	14.55%	14.53%
Sludge Diff. Level Used (mm)	285	255	310	375	300	300
Sludge Flow (LPM)	7.87	7.04	10.08	9.87	11.05	11.05
Sludge Flow (GPM)	2.08	1.86	2.66	2.61	2.92	2.92
Sludge Flow (dry lbs/hr)	18.72	17.97	25.29	25.51	27.23	28.05
Polymer #1 Diff. Level Used (mm)	115	100	120	150	125	115
Polymer #1 Flow (LPM)	1.16	1.01	1.43	1.45	1.69	1.55
Polymer Dilution Water Flow (GPM)	0.31	0.27	0.38	0.38	0.44	0.41
Polymer #1 Flow (GPM)	0.31	0.27	0.38	0.38	0.45	0.41
Polymer #1 Flow (neat lbs/hr)	0.77	0.67	0.94	0.96	1.12	1.03
Polymer #1 Dosage (Active lb/DT)	41.10	37.24	37.36	37.48	40.96	36.59
Polymer #1 Dosage (Active kg/BDMT)	20.88	18.92	18.98	19.04	20.81	18.59
Outlet Cake kg/hr. Wet	40.80	40.80	69.53	66.86	98.40	96.00
Outlet Cake "Flow" (LPM)	0.68	0.68	1.16	1.11	1.64	1.60
Outlet Cake "Flow" (GPM)	0.18	0.18	0.31	0.29	0.43	0.42
Outlet Cake (dry kg/hr.)	6.65	7.10	13.91	9.65	14.31	13.94
Outlet Cake (dry lbs/hr.)	14.67	15.66	30.66	21.27	31.56	30.75
Estimated Washwater (gal/DT)	48.07	50.08	41.86	33.60	44.07	42.79
Ash %	25.60%	25.14%	23.83%	24.95%	24.89%	X
Capture %	X	X	X	X	X	X

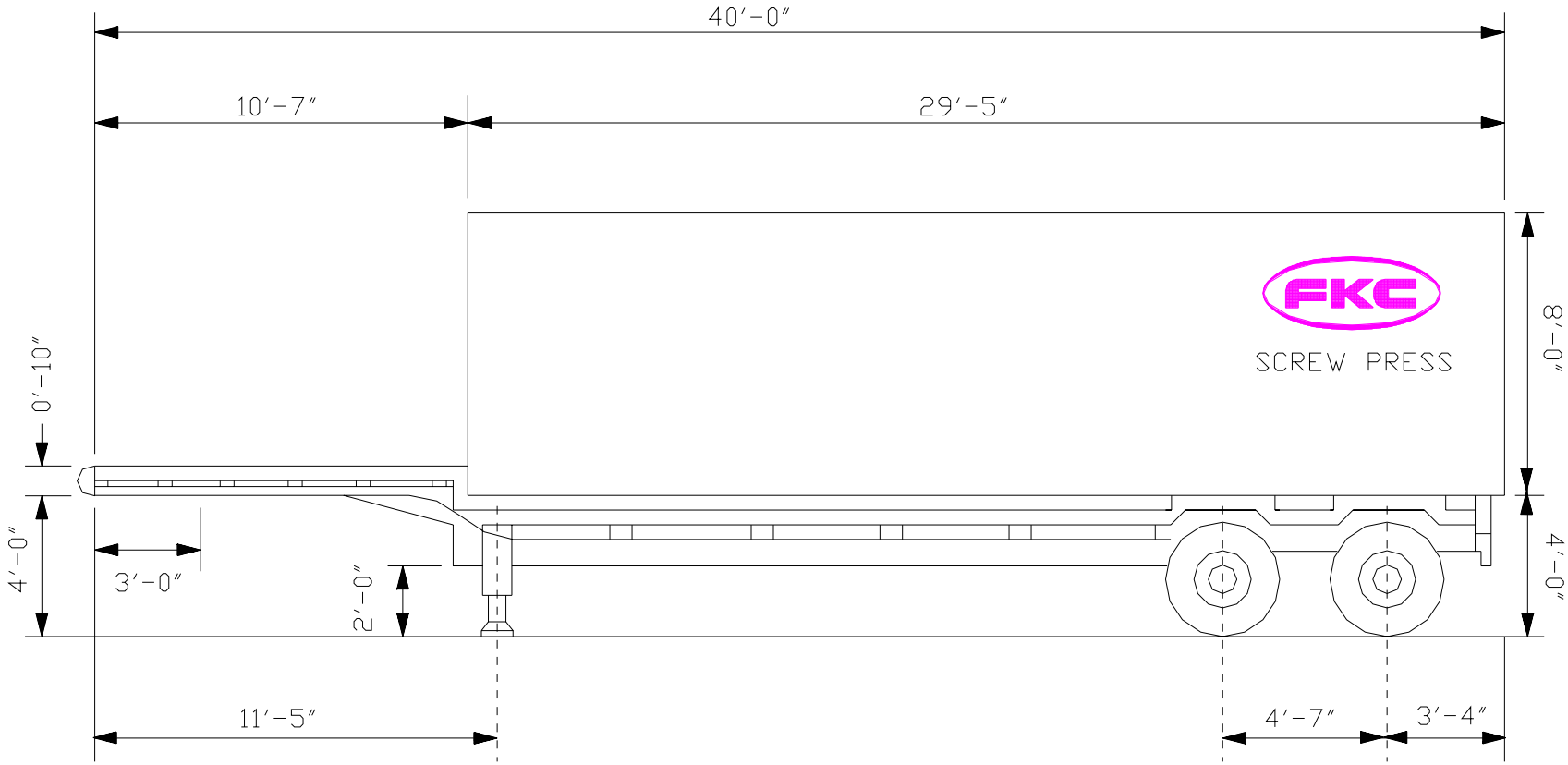

Mark	Description	Material	pcs.	Weight kg.	Remarks
JOB No.	Messrs. REFERENCE			Quantity	Scale
Drawing No.	Title Test Trailer			Date	
				Drawn by TB	Ref. JOB No.

FKC CO., LTD.
P.O. BOX 1677 OR 2708 W. 18TH ST.
PORT ANGELES, WA 98362
(360) 452-9472 FAX (360) 452-6880

No.	Alteration	Date	Sign.

REVISION 1 | SHEET 1 OF 1

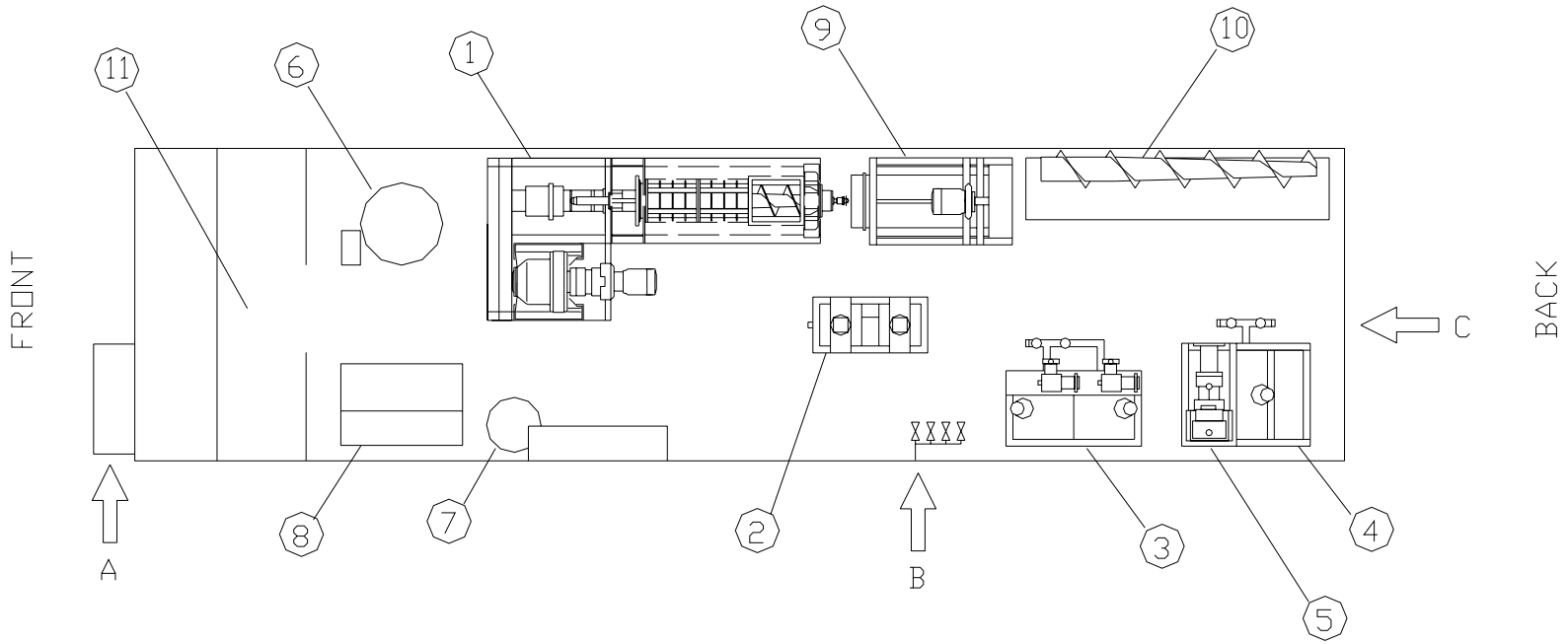

1	SCREW PRESS
2	FLOCCULATION TANKS W/ AGITATORS
3	POLYMER TANKS W/ AGITATORS
4	SLUDGE TANK W/ AGITATOR
5	SLUDGE FEED PUMP
6	BOILER
7	BOILER FUEL TANK
8	CONTROL PANEL
9	ROTARY SCREEN THICKNER
10	SPARE SCREWS SHELVING
11	LAB

A	ELECTRICAL CONNECTION
	575V or 480V / 3 PH / 15 AMP
B	WATER CONNECTION 3/4" NPT
C	SLUDGE CONNECTION
	2 1/2" FEMALE CAMLOCK

No.	Alteration	Date	Sign.

Mark	Description	Material	pcs.	Weight kg.	Remarks
JOB No.	Messrs. REFERENCE			Quantity	Scale
Drawing No.	Title Test Trailer General Arrangement			Date	
				Drawn by TB	
					Ref. JOB No.

FKC CO., LTD.

P.O. BOX 1677 OR 2708 W. 18TH ST.
PORT ANGELES, WA 98362
(360) 452-9472 FAX (360) 452-6880

REVISION 1 SHEET 1 OF 1

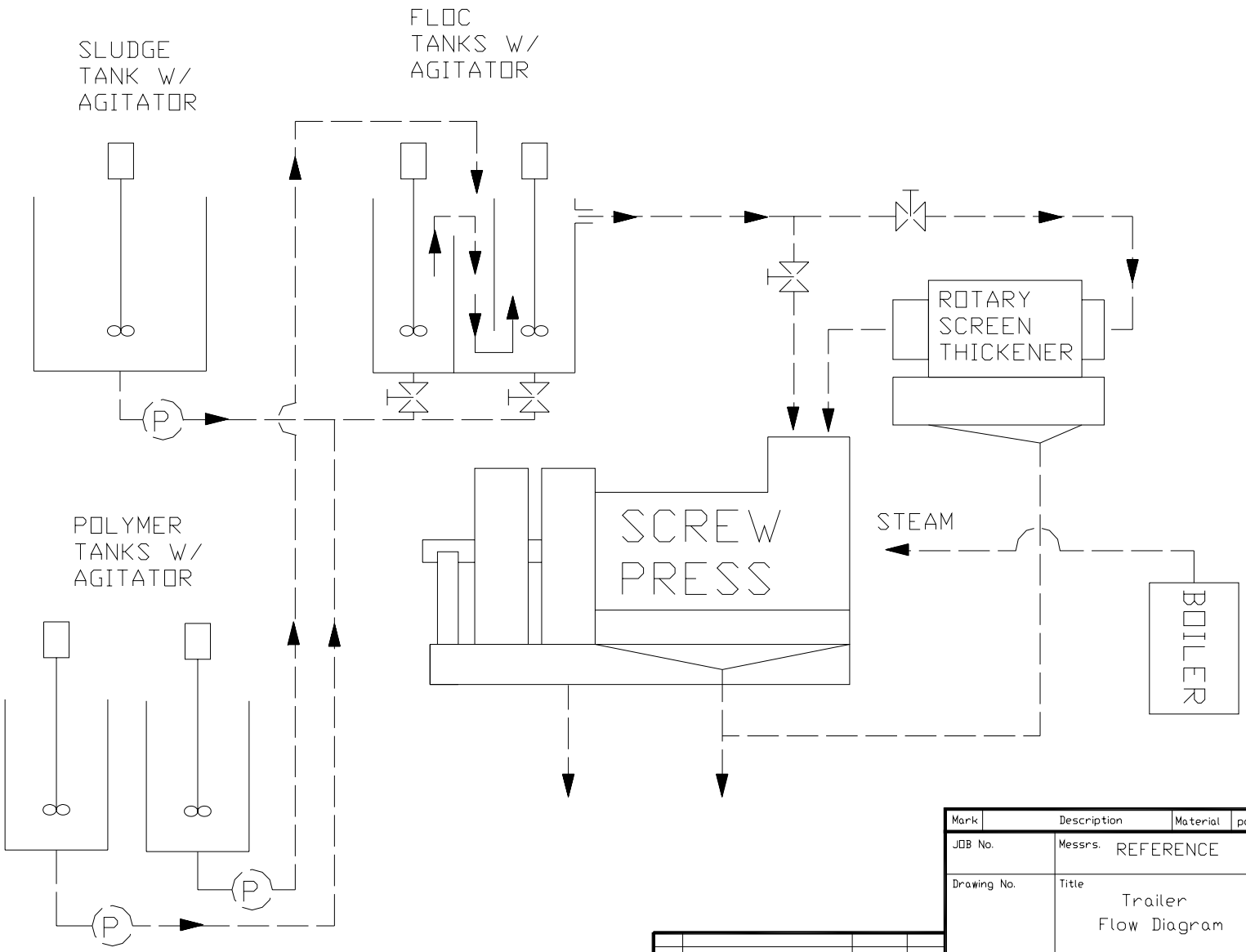

No.	Alteration	Date	Sign.

Mark	Description	Material	pcs.	Weight kg.	Remarks
JOB No.	Messrs. REFERENCE			Quantity	Scale
Drawing No.	Title Trailer Flow Diagram			Date	
				Drawn by TB	
					Ref. JOB No.

FKC CO., LTD.
P.O. BOX 1677 OR 2708 W. 18TH ST.
PORT ANGELES, WA 98362
(360) 452-9472 FAX (360) 452-6880

REVISION 1 | SHEET 1 OF 1

FKC CO., LTD.

2708 West 18th Street
Port Angeles, WA 98363

(360) 452-9472
FAX (360) 452-6880

June 11, 2013

Jacob Porter
Hazen and Sawyer
Tampa, FL

Phone: 813-630-4498

Email: jporter@hazenandsawyer.com

RE: Revised Proposal for FKC Dewatering Equipment for Tampa

Dear Jacob,

Attached is the FKC revised dewatering equipment proposal for the Tampa WWTP plant. This accounts for sludge testing and data collected during the onsite pilot testing.

This proposal is for Screw Presses and Floc Tanks. No other ancillary equipment is included.

I hope this information is helpful. Please contact this office if you have questions or if you need any further information.

Sincerely,

Shane Harvey
FKC COMPANY, LTD.

Table of Contents

A. Proposed Equipment

1. Screw Press …… 1
2. Flocculation Tank …….. 2

B. Miscellaneous

1. Delivery..... 3
2. Shipping Arrangements..... 3
3. Price Summary…….. 3
4. Effective Period..... 3
5. Payment Terms..... 3
6. Installation..... 3
7. Operator Training and Start up..... 4
8. Warranty..... 4
9. Performance Guarantee…… 4
10. Documentation Schedule..... 4
11. Spare Parts List..... 4
12. Service Rates..... 5
13. Excluded Items…….. 5
14. Estimated Maintenance Hours per Hour of Operation …….. 5
15. Suggested Operator Hours per Hour of Operation …….. 6
16. Structural Design Forces ……... 6
17. Reference Drawings 7

A. Proposed Equipment

1. Screw Press

Qty.	Description	Unit Price Delivered	Extended Price Delivered
4	**FKC Screw Press Model BHX-1000x5500L**	**US$265,000**	**$1,060,000**

Material:	Anaerobically Digested Sludge
Capacity:	8.0 dry tons per day each (32 dry tons per day total)
Inlet consistency:	1.5 to 2.5% TS%
Outlet consistency:	17% solids or higher with polymer addition
Nonvolatile solids content:	20% or higher
Polymer Dosage Rate:	38 active lbs per dry ton of sludge (Ciba 7878 or equivalent)
Materials of construction:	SS-316L wetted parts, Galvanized Base
Screens:	Punched SS-316L
Speed reducer:	Sumitomo Cyclo reducer
Motor:	5 HP, 1800 rpm, NEMA B, 480 VAC, 3 Ph, 60 Hz, included Suitable for variable speed operation w/ PWM constant torque inverter
Other:	1 set standard tools 1 set drum covers 1 motor coupling 4 spare screens
Approx. shipping weight:	13 tons each
Washwater (gpm):	18 gpm average (each) @ 35 psi
Delivery:	Delivery within 5 (five) months after receipt of written purchase order

A. Proposed Equipment

2. Flocculation Tank

Qty.	Description		Unit Price Delivered
4	Flocculation Tank 285 gal with variable speed agitator		**Included**
	Drive:	SEW Eurodrive Varimot or Equal gearmotor with mechanical speed variator	
	Motor:	1.5 HP, 1800 rpm, manufactured by SEW 480 VAC, 3 Ph, 60 Hz included	
	Materials of construction:	SS-316L wetted parts	
	Approx. shipping size/ weight:	55 cubic feet / 420 Lbs each	
	Delivery:	Delivery within 5 (five) months after receipt of written purchase order	

B. Miscellaneous

1. Delivery

The screw presses and flocculation tanks will be ready to ship within five (5) months after receipt of written purchase order. Delivery will be within six (6) months after receipt of purchase order to your facility.

2. Shipping Arrangements

The FKC screw presses will be shipped via 40' and/or 20' open top container from Fukoku Kogyo's (FKC Japan) Ishinomaki, Japan factory to a local port then best way overland to the WWTP.

The flocculation tanks will be shipped best way from Port Angeles, WA.

3. Price Summary

	FOB Plant Site
Screw Presses	$1,060,000
Flocculation Tanks	Included
Total	US$1,060,000

4. Effective Period

This proposal shall remain valid **60** days from the date of the proposal.

5. Payment Terms

30% with certified drawings
30% with shipment
30% with delivery
10% with performance or within 6 months of delivery if the equipment has yet to start-up due to the schedule of the customer, whichever occurs first.

Net 30 days

6. Installation

The screw press is shipped in one main body section. The main body is skid mounted and match marked for ease of installation. Installation drawings are provided.

The Flocculation Tank requires minor assembly of the agitator assembly and field mounting of the agitator assembly on the tank. The Dewatering System requires anchorage and some piping and wiring connections in the field be the System is desired to be prepiped and prewired to the maximum extent possible.

Installation and erection assistance are not included in the price of the equipment and generally are not required. However, the service is available for our standard service rates (see the enclosed rate sheet).

7. Operator Training and Start Up

Operator and maintenance training and start up services are included in the price of the equipment.

Operator and maintenance training can be accomplished in approximately two hours per group. Ideal training sessions include both classroom and on-site (at the screw press) sessions.

Generally speaking training and start up can be accomplished in a four day period.

Erection assistance and a separate trip for training are not included in the price of the equipment. Additional engineering service days are billed at the rates on the enclosed rate sheet.

8. Warranty

FKC's mechanical warranty covers material and workmanship for a period of twelve (12) months from start-up or eighteen (18) months from delivery whichever occurs first.

9. Performance Guarantee

The performance figures and conditions denoted in section A of this proposal constitute FKC Co., Ltd.'s performance guarantee and the conditions required to meet the guarantee. All of the consistency figures are based on total solids (TS) not total suspended solids (TSS).

In the event that performance is not met, FKC will provide all parts, engineering, and labor associated with the work necessary to bring the equipment into conformance with the performance guarantee.

10. Documentation Schedule

A. Approval Drawings - within 3 weeks after receipt of purchase order
B. Certified Drawings - within 2 weeks after return of approval drawings
C. Operation and Maintenance Manuals - 14-16 weeks after receipt of order

11. Spare Parts List

No spare parts are required for the first 1-2 year period of operation.
A list of long term spare parts is available upon request.

12. Service Rates

The following are rates and terms for professional and technical services furnished by FKC:

Weekdays
$750.00 - Per eight (8) hour day on weekdays plus, lodging, and rental car expenses.
$140.00 - Per hour for all hours exceeding eight (8) hour workday on weekdays.
$80.00 - Per hour for office engineering services and telephone consultations.

Saturdays, Sundays and Holidays
$1,120.00 - Per eight (8) hour day plus lodging and rental car expenses.
$210.00 - Per hour for all hours exceeding eight (8) hour workday.

Travel Time - Weekdays
$65.00 - Per hour travel time. (Not to exceed $520/day)

Travel Time – Weekends and US Holidays
$97.50 - Per hour travel time (Not to exceed $780.00/day)

The above rates are US$.
Payment terms: Net 30 days.

13. Excluded Items

Excluded are mechanical or electrical installation, civil work, interconnecting piping, polymer or biosolids product storage, any state or local sales or use taxes, or any required bonding and all ancillary equipment.

14. Estimated Maintenance Hours per Hour of Operation

Screw Presses

Maintenance Item	Frequency	Duration (total all units)	Hours/year
Gearbox Oil Replacement	1x / year	2 hours	2 hours
Grease Bearing	8x / year	0.5 hour	4 hours
Spray Screw Press	8x / year	1 hour	8 hours

Flocculation Tanks

Maintenance Item	Frequency	Duration (total all units)	Hours/year
Gearbox Oil Replacement (using synthetic oil)	1x / 2 years	2 hours	1 hour

Total Maintenance hours per year (all units) = 15
Operational hours (24/7/365) = 8,760
Maintenance hours / hour of operation = .0017

15. Suggested Operator Hours per Hour of Operation

Running 24/7, there will most likely be 3 “shifts” in the plant. Realistically, each “shift” should do a “walk-by” of the screw press units twice per shift, or 6 times per 24 hour day. This is simply looking in the flocculation tank of each screw press, then making any polymer adjustments if necessary. This can be done in 10 minutes (all 4 units) totaling 60 minutes per 24 hour day.
Operator hours / hour of operation = 1 / 24 = .04

16. Structural Design Forces

See attached drawing.

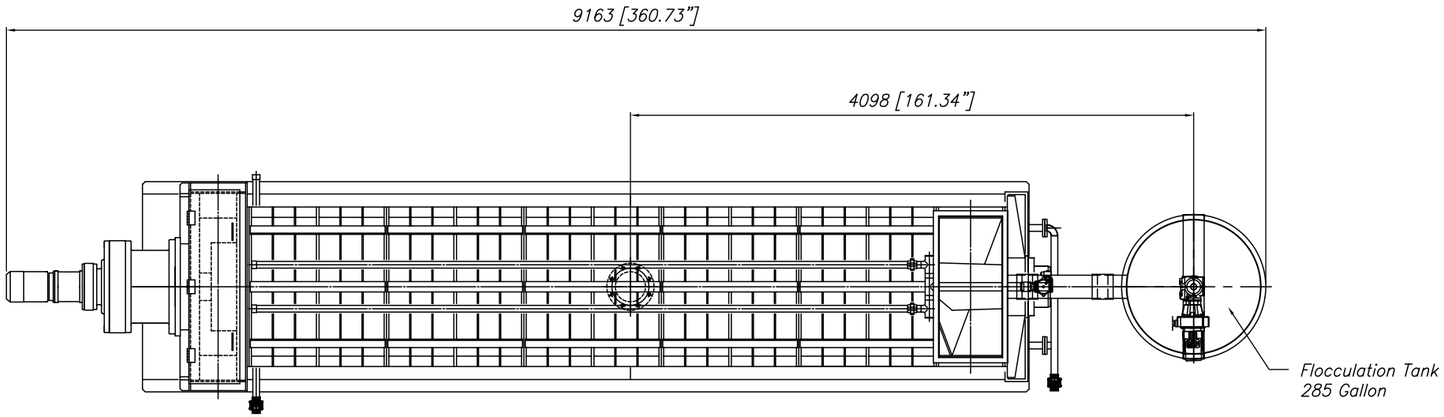

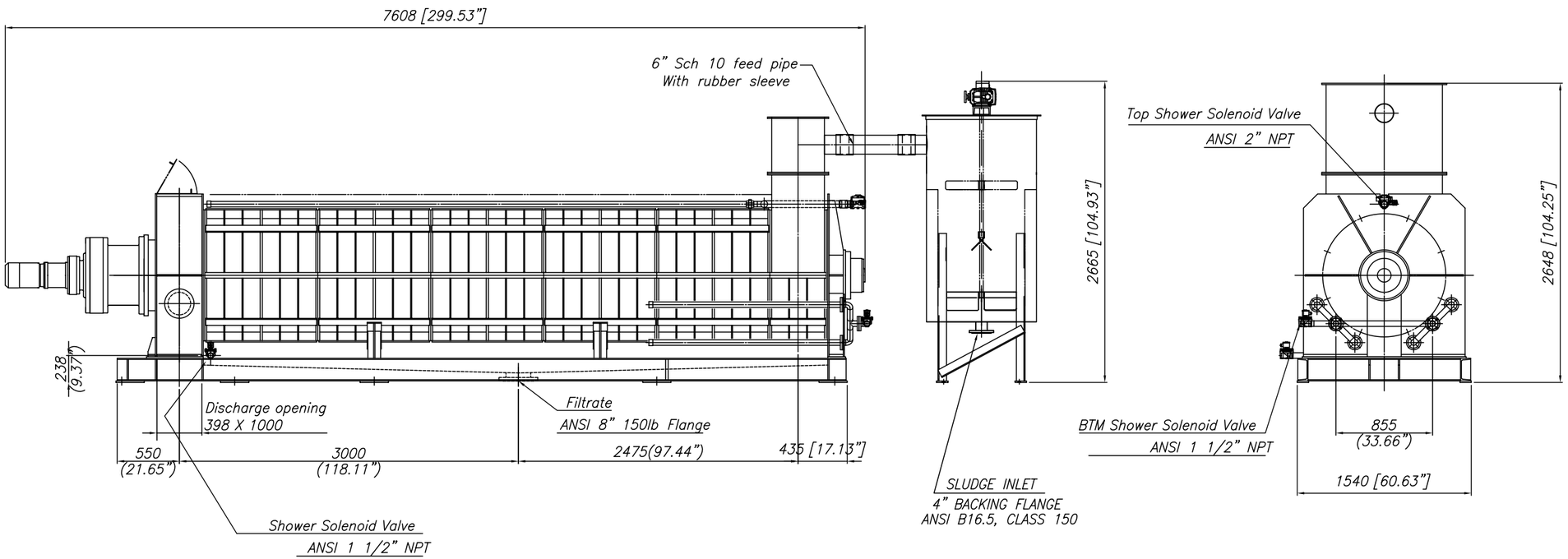

Variable speed motor
5HP, 230/460V, 60Hz, 1800rpm
Frame No. 182TC

Speed reducer
CHVJ-6255DA-7569
with C-face adaptor

Screw Press Total weight = 8,500 kg(18,739 lbs)
Screw Press Operating weight = 12,000 kg(26,455 lbs)

NOTES:

1. Screw Press covers not shown
2. The Flocculation Tank can also be mounted on either side of the Screw Press rather than off the end of the Screw Press as shown

Screw rev.
437 ~ 1750 X 1/7569 = 0.058 ~ 0.231 rpm

Rev.	Date	Description	Drawn by	Rev. by	Appd. by	Appd. by

End user REFERENCE ONLY	Quantity 1
Job name BHX-1000X5500L Screw Press with 285 Gal Floc Tank	Scale 1/25
Dwg. name Assembly	
	Ref. job No

FUKOKU KOGYO CO., LTD.

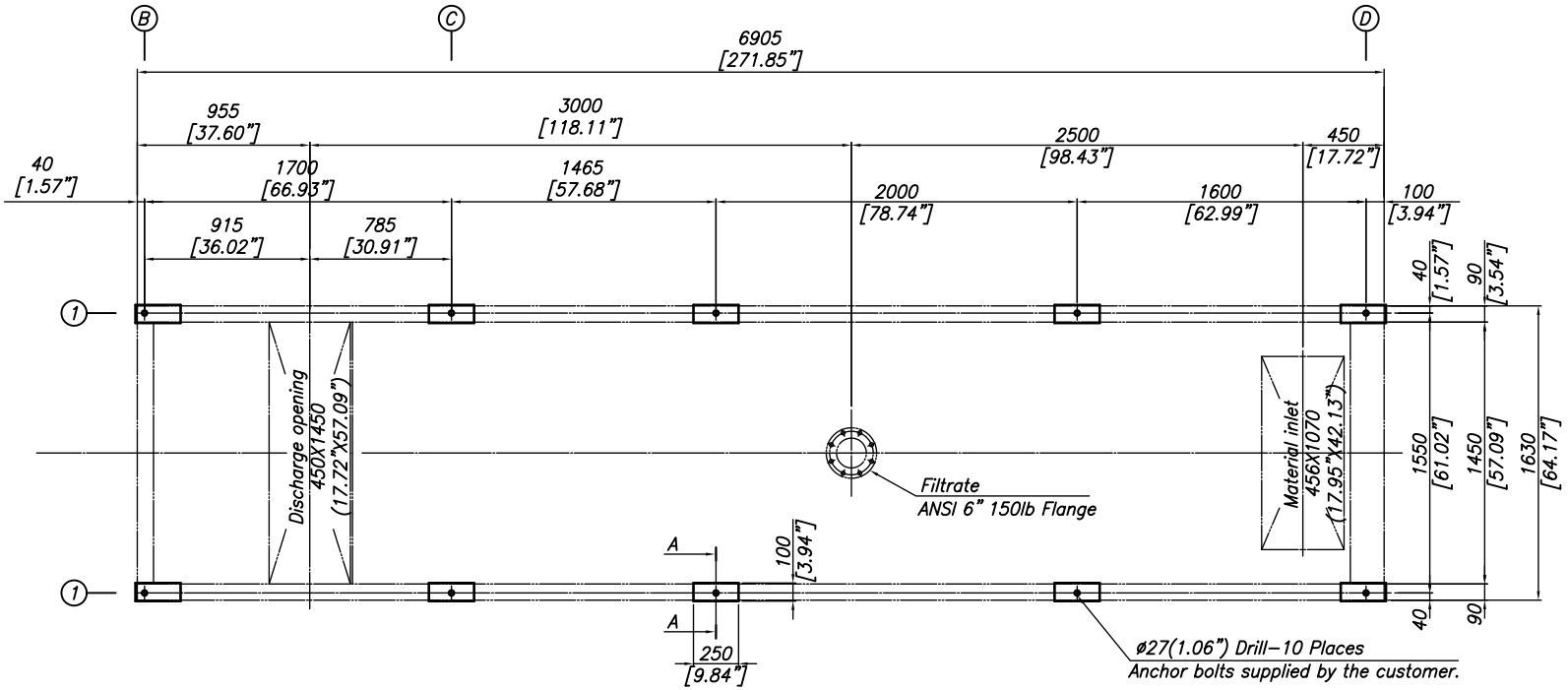

Static load	3000 kg (6614 lb)	3000 kg (6614 lb)	1500 kg (3307 lb)	1500 kg (3307 lb)	4500 kg (9921 lb)

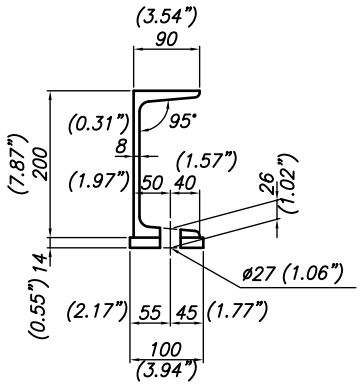

A–A View

Dynamic load

	B	C	D
1	−395 kg (−871 lb) ↑	−395 kg (−871 lb) ↑	−340 kg (−750 lb) ↑
2	395 kg (871 lb) ↓	395 kg (871 lb) ↓	340 kg (750 lb) ↓

Note: Loads shown above are worst case dynamic loads during plugged condition.

Total weight = 9,000 kg(19,842 lb)
Operating weight = 13,500 kg(29,763 lb)

		Quantity
Purchaser	FKC Co., Ltd	1
End user	REFERENCE	
Job name	BHX–1050X5500L Screw press	
Dwg. name	Assembly	
Job No.		
Dwg. No.		Ref. job No.

Rev.	Date	Description	Drawn by	Rev. by	Appd. by	Appd. by

FUKOKU KOGYO CO., LTD.

HUBER

HUBER TECHNOLOGY INC. ROTAMAT® SCREW PRESS ROS3Q 280 PILOT TEST

Howard F. Curren AWTP
(Tampa WWTP)
2545 Guy N Verger Blvd
Tampa, FL

Test Date: 3/18/2013 – 3/22/2013

Job Number: JO 7133

ATTENDANTS:	POSITION:	ASSOCIATION:
Lars Weidemann	Technician	Huber Technology Inc.

Huber Technology Inc.
9735 North Cross Center Court, Suite A
Huntersville, NC 28078
Office (704) 949-1010
Fax (704) 949-1020
www.huber-technology.com

TABLE OF CONTENTS

1. PILOT UNIT - SCREW PRESS ROS3Q 280 3

1.1 SCREW PRESS ROS3Q 280 TECHNICAL DATA 4

2. FACILITY SPECIFICATIONS AND REQUIREMENTS 6

3. BENCH TEST RESULTS OF POLYMER REACTION 7

4. PILOT TEST RESULTS 8

4.1 ANAEROBIC DIGESTED SLUDGE TEST 9

4.1.1 POLYMER DOSING AND EFFECT ON CAKE SOLIDS 11

4.1.2 HYDRAULIC AND SOLIDS LOADING EFFECT ON CAKE SOLIDS 12

4.1.3 OUTLET CONE PRESSURE EFFECT ON CAKE SOLIDS 15

4.1.4 CAPTURE RATE 16

5. CONCLUSION 19

6. SUMMARY OF ACTIVITIES 21

APPENDICES 22

APPENDIX A – SCREW PRESS ROS3Q 280 PILOT TEST PHOTOS 23

LIST OF FIGURES:

FIGURE 1 – GENERAL OVERVIEW 1
FIGURE 2 – GENERAL OVERVIEW 2
FIGURE 3 – POLYMER DOSING
FIGURE 4 – SOLID LOADING
FIGURE 5 – SCREW SPEED EFFECT ON THROUGHPUT
FIGURE 6 – SCREW SPEED EFFECT ON CAKE SOLIDS
FIGURE 7 – CONE PRESSURE EFFECT ON CAKE SOLIDS
FIGURE 8 – POLYMER CONSUMPTION AND CAPTURE RATE
FIGURE 9 – SCREW SPEED EFFECT ON CAPTURE RATE
FIGURE 10 – INLET FEED PRESSURE EFFECT ON CAPTURE RATE

LIST OF TABLES:

TABLE 1 – PILOT TEST REQUIREMENTS POWER
TABLE 2 – PILOT TEST WATER REQUIREMENTS
TABLE 3 – BENCH TEST RESULTS
TABLE 4 – PILOT TEST SCHEDULE
TABLE 5 – PILOT TEST FINAL RESULTS
TABLE 6 – SLUDGE TEST CONCLUSION

1. PILOT UNIT - SCREW PRESS ROS3Q 280:

Pilot testing is a useful tool in evaluating sludge and its suitability for dewatering with screw press technology. This testing allows for a full range of testing with different parameters to find the most optimal method of operation and to determine what ranges of operation are achievable from maximum throughput to minimum polymer consumption.

The tests performed provide the following:

- Most efficient set-points for peak cake solids performance.
- Polymer consumption rates for varying capture rates and cake solids.
- Ranges for good or acceptable performance.
- Absolute maximum throughput.

The dewatering machine is a screw press with a conical shaft and cylindrical sieves. The machine is subdivided into the entering zone, the three part thickening and dewatering zone, and the pressing zone with a pneumatic backpressure cone. The pilot unit is mounted on a trailer that contains all necessary equipment to operate the dewatering machine.

The pilot unit is comprised of:

- The Screw Press RoS3Q 280.
- A thin sludge pump: progressive cavity pump, *SEEPEX* 2-10 LBN.
- A polymer station: *Velodyne*, inline mixing.
- A flow meter for thin sludge and polymer.
- Injection and mixing devices for the polymer.
- Sludge polymer mixing devices: Reactor pipe (29 feet).
- Controller: Allen Bradley programming control (PLC) and operator interface.

The controls are equipped with a PLC and an operator interface (HMI). The screw press is designed for and can be operated under complete automation.

The most important requirement parameters are:

- Desired volume flow rate of thin sludge and polymer [GPM]
- Dry solids (DS) of sludge IN and OUT [%]
- Polymer consumption [lbs polymer / ton DS]
- Speed of screw press [%]

1.1 SCREW PRESS ROS3Q 280 TECHNICAL DATA:

HUBER ROTAMAT® Screw Press RoS3Q 280

- Screw Drive: *BAUER* motor and gearbox
  - Type: BF40Z-34/D06XA4-TF/AMUL-C2-SP
  - Class I, Div 2 with 0.37 kW (0.5 HP), 460 V AC, 60 Hz ; speed motor 1680 rpm, shaft 1.4 (with 60 Hz)
    VFD controlled (12 – 120 Hz)
- Pressure Gauge, inlet of press: make *IFM*
- Wash System Solenoid Valves: *Burkert* type 5282 A
  - 120 V AC, 60 Hz, 2 – 10 bar (30 – 145 PSI)

- Polymer Feed System: Velodyne
  - Model max. 1 GPH, serial: 21471 (revision: January 2009)
    - Mixing Motor: *BALDOR*, 90 V AC, 60 Hz
    - Polymer Dosing Pump: progressive cavity
      - *SEEPEX*, Model: serial 0505956152-7
      - maximum capacity: 1.5 GPH / 50 PSI

Flocculation system: polymer injection ring, mixing device (mounted to the feed pipe, size: 1 1/2") and pipe flocculation reactor.

Feed pump: progressive cavity pump, make: *SEEPEX* (VFD controlled: max. capacity 20 GPM).

Flow meters: *ENDRESS* + *HAUSER* (Thin Sludge and Polymer).

Control panel: capable of fully automated operations; manufacturer: *EII*, includes HMI for easy set-point modification.

TABLE 1 – PILOT TEST POWER REQUIREMENTS

	VOLTAGE / HERTZ	POWER	FLA (AMPS)	OPERATION MODE	VFD
FEED PUMP	460 V / 60 HZ	4 KW / 5 HP	7.5	CC: 3.25 KWH	YES
SCREW PRESS	460 V / 60 HZ	0.37 KW / 0.5 HP	1.1	CC: 0.30 KWH	YES
POLYMER SYSTEM	120 V / 60 HZ	--	9.2	CC: 0.83 KWH	YES
COMPRESSOR	120 V / 60 HZ	--	10.5	IC: 0.1 KWH	NO
FLOW METER, SOLENOID VALVE	120 V / 60 HZ	--	0.5	0.1 KWH	NO

NOTES:
VFD – VARIABLE FREQUENCY DRIVE
CC – CONTINUOUS CONSUMPTION
IC – INTERMITTENT CONSUMPTION
KW – KILOWATT
HP – HORSE POWER
AMPS - AMPERES
KWH – KILOWATT HOURS

TABLE 2 – PILOT TEST WATER REQUIREMENTS

	TYPE	PRESSURE	OPERATION MODE	DEMAND
POLYMER	POTABLE WATER *OR* FILTERED PLANT WATER	60 - 70 PSI	CONTINUOUS	NORMAL SOLID LOAD (80 – 100 LBS DS) 1 – 1.5 GPM HIGH SOLID LOAD (120 – 200 LBS DS) 2 – 3 GPM
WASH WATER	FILTERED PLANT WATER	50 PSI MINIMUM	INTERMITTENT: STANDARD IS 30 MINUTES BETWEEN WASH CYCLES	WATER DEMAND: 15 GALLONS PER WASH CYCLE (AT 22.5 GPM)

NOTES:
PSI – POUNDS PER SQUARE INCH
DS – DRY SOLIDS
GPM – GALLONS PER MINUTE
LBS – POUNDS

2. FACILITY SPECIFICATIONS AND REQUIREMENTS:

Tampa WWTP	
Design Daily Flow	96 MGD
Actual Daily Flow	56 MGD
Sludge Type	Anaerobically Digested
Sludge Age	NA
Waste Sludge Flow	380,000 GPD
Solid Content	1.9%
Volatile Solids	78%
Existing Solids Handling System	Belt Press

3. BENCH TEST RESULTS OF POLYMER REACTION:

The first step of the pilot test is conducting bench tests to determine which polymers are suitable for the sludge generated at the Glen Rose Wastewater Treatment Plant. The bench tests were performed using polymers from the manufacturer Ashland. The products were, K260FL, K275FLX, K279FLX and BASF 8818 Table 3 below shows the bench test results from multiple trials with different polymers.

The pilot unit was installed and settings 1 thru 8 below were tested or observed:

1. Throughput
2. Speed of screw press auger
3. Polymer consumption
4. Concentration of polymer solution
5. Various pressures at discharge of screw press
6. Conditions at mixing valve
7. Flocculation pipe (pressure feeding of screw press only)
8. Different polymers

Table 3 – BENCH TEST RESULTS

Polymer (type)	Sludge (ml)	Polymer (ml)	Content of active polymer (%)	Filtrate (ml)	Mixtures
K 260 FL	500	80	0.2	400	8
K 260 FL	500	90	0.2	430	9
K 279 FLX	500	80	0.2	410	7
K 275 FLX	500	90	0.2	375	13
8818	500	70	0.2	320	10

K 260 FL: No good: not stable flocculent
K 275 FLX: Good: stable flocculent
BASF 8818: Good stable flocculent
K279 FLX: Good; stable flocculent

The most effective polymer and sludge reaction occurred with the K 279 FLX and the BASF 8818 polymer. Therefore both polymers were used during the pilot testing.

4. PILOT TEST RESULTS:

Pilot testing is performed to determine the operating conditions and ranges for the Screw Press to achieve its best performance. The success of the Screw Press performance is measured using several parameters such as the following:

- cake solids characteristics
- polymer consumption
- capture rate
- solids / hydraulic loading
- screw speed
- solid loading
- pressure settings

The testing program is sometimes modified during test runs in case of unusual operating conditions or performance characteristics. Table 4 represents the schedule which was followed throughout the testing period.

TABLE 4 – PILOT TEST SCHEDULE

Day	Test run(s)	Sludge Type	Polymers Used
Monday	NA	NA	NA
Tuesday	1 through 2 3 through 11	Anaerobically Digested	K 290 FLX K275 FLX
Wednesday	12 through 22	Anaerobically Digested	BASF 8818
Thursday	23 through 32	Anaerobically Digested	K279FLX
Friday	NA	NA	NA

4.1 BLENDED SLUDGE TEST:

Figure 1 and Figure 2 are a graphical overview of the main parameters and conditions of which the screw press was operated within:

FIGURE 1 – GENERAL OVERVIEW 1

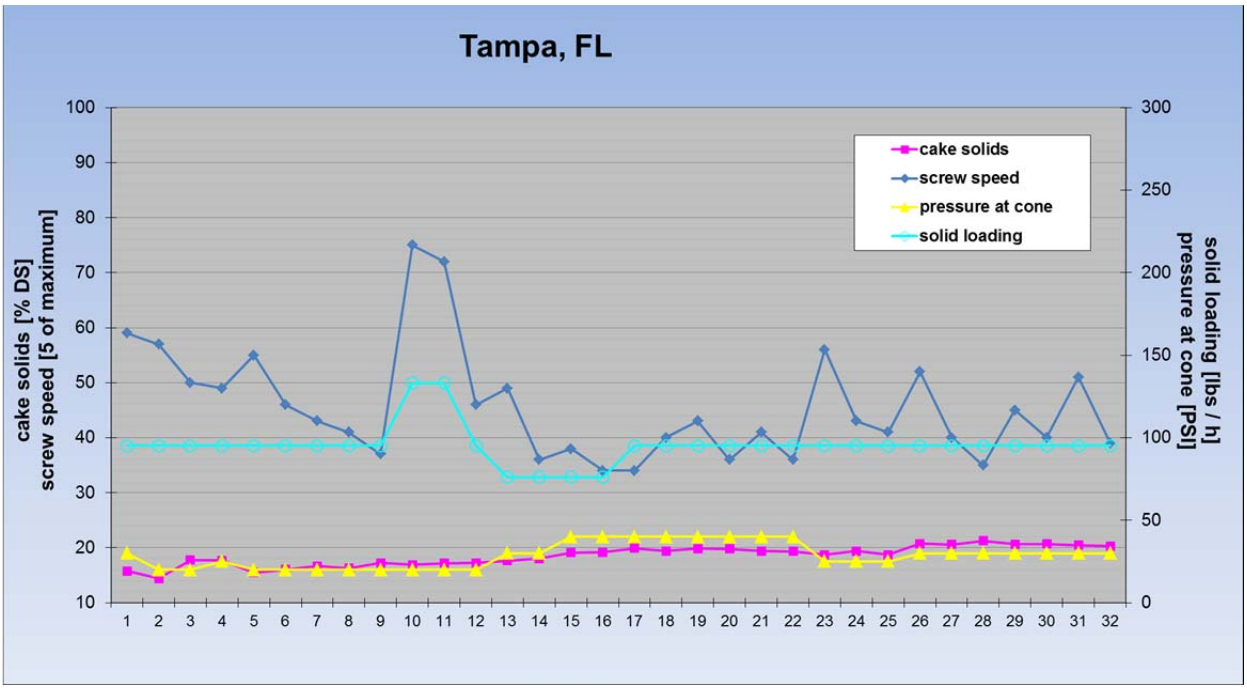

The cake solids consistently ranged between 18% and 21% DS. The polymer consumption was maintained within a range of 34.5 and 60.5 lbs. active / ton DS to ensure good dewatering performance.

FIGURE 2 – GENERAL OVERVIEW 2

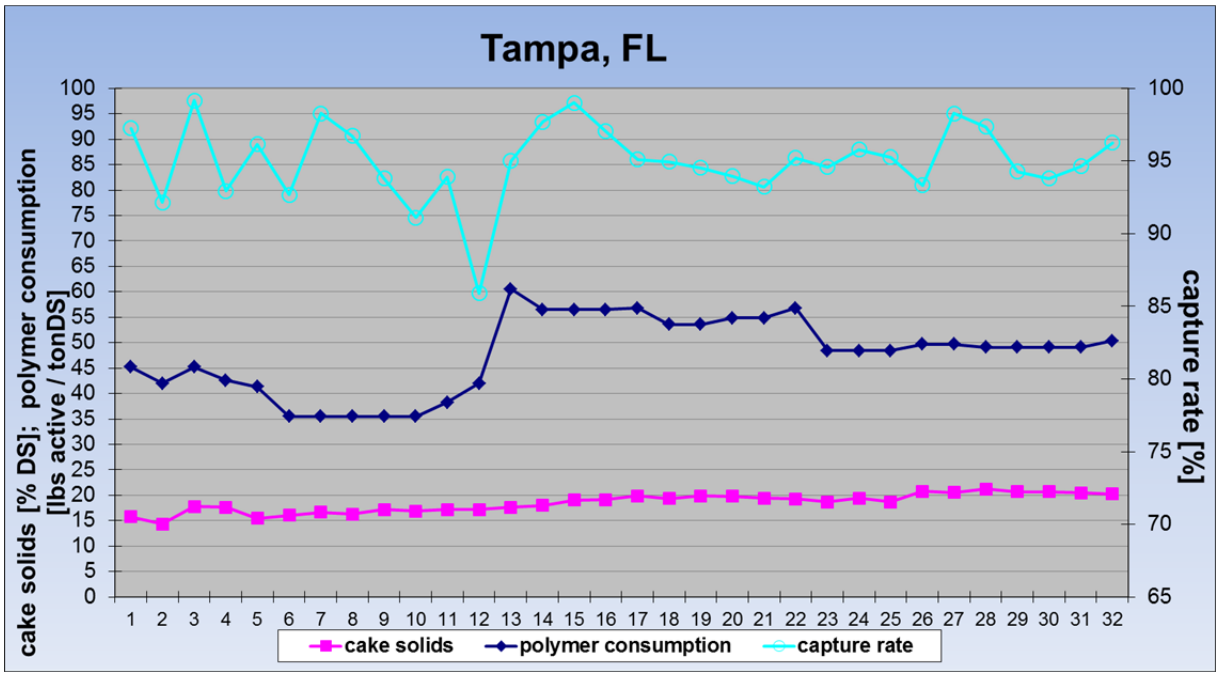

TABLE 5 – PILOT TEST FINAL RESULTS

Tampa WWTP			
Sludge Type: Aerobically Digested	**Minimum**	**Maximum**	**Average**
Screw Press Speed (rpm)	0.7	1.6	1
Pressure at Screw Press Inlet (psi)	0.2	5.5	1.9
Pressure at Dewatering Cone (psi)	20	40	28.8
Feed Sludge Solid Content (%DS)	1.9	1.9	1.9
Cake Solids (%DS)	14.4	21.2	18.5
Solid Loading Rate (lbs/hr)	76.1	133.1	95.1
Flow Rate (GPM)	8	14	10
Polymer Consumption (lbs. active/ton DS)	34.5	60.5	47.7
Capture Rate (%)	**85.9**	**99.2**	**95**

These set-points cover a wide range to determine the best performance settings. The above ranges are not intended to be the final design parameters for any construction or upgrades. The optimal operational set-points and ranges are defined in the conclusion section of this report.

4.1.1 POLYMER DOSING AND EFFECT ON CAKE SOLIDS:

The screw press was operated with multiple polymers and multiple dosing rates ranging from 34.5 – 60.5 lbs. active / ton DS. Figure 3 illustrates the effect that the polymer dosing had on the cake solids.

FIGURE 3 – POLYMER DOSING

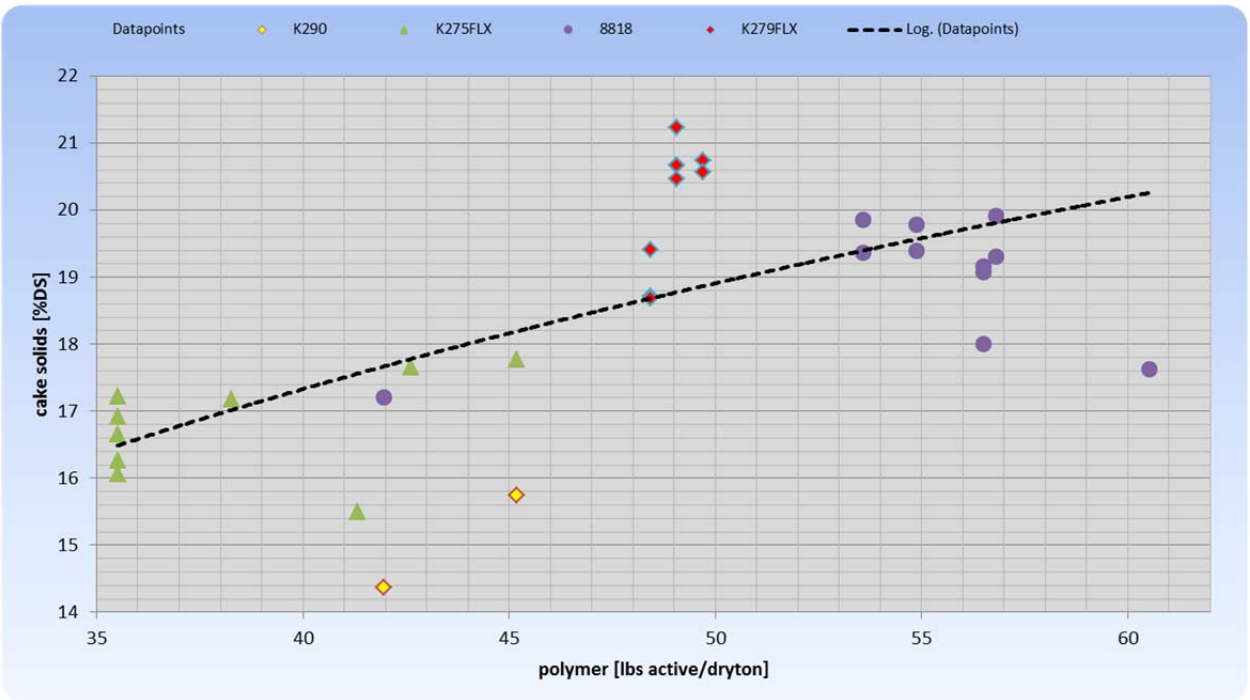

The cake solids are consistent between 18% and 21% when using 48 – 57 lbs. active / ton DS. The excessive use of polymer above 57 lbs. active / ton DS is of no benefit.

4.1.2 Solid and Hydraulic Loading Effect on Cake Solids:

The screw press was operated using sludge with an inlet solids content of 1.9% DS. The sludge flow rate was set between 8 and 14 GPM resulting in a solid loading of maximum 133 lbs./hr.

The hydraulic loading / solid loading certainly affects the performance of the screw press and there is always an optimum loading for a certain set of parameters. Figure 4 shows that the maximum cake solids achievable with these parameters was approximately 95 lbs/hr.

Figure 4 – Solid Loading

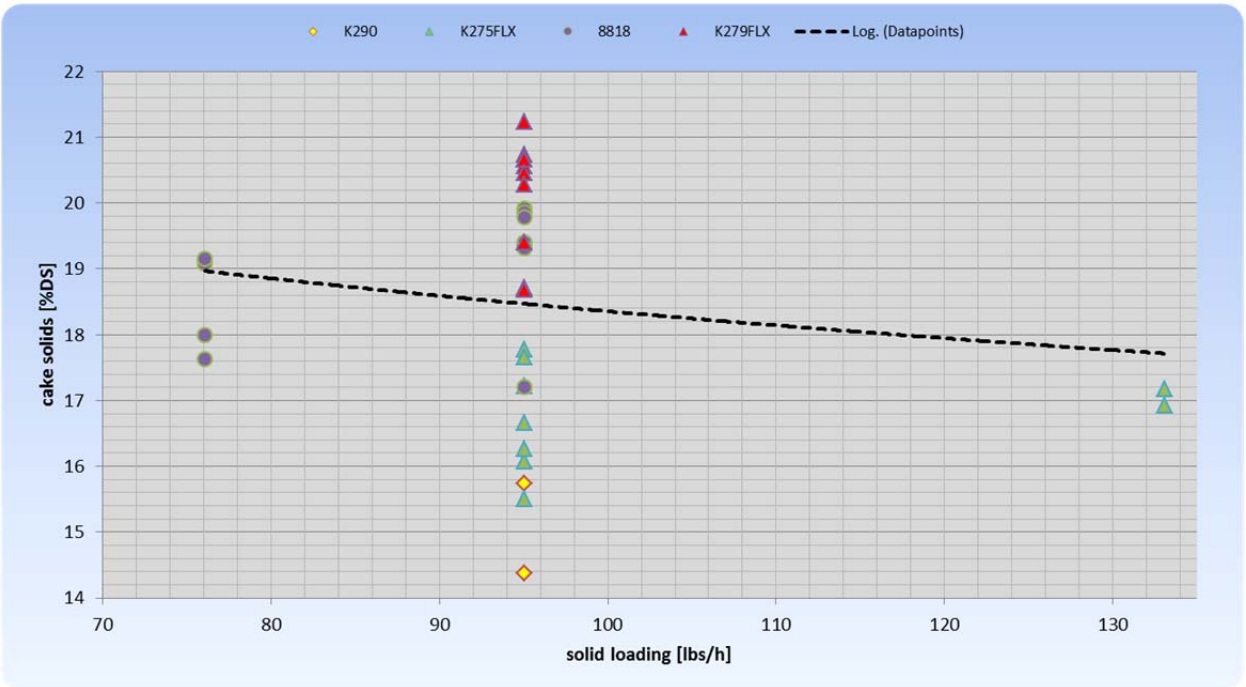

In general the effect of the solids loading on the discharged cake solids is also related to the screw speed. The solids loading determines the speed of the auger with higher loading rates requiring higher screw speeds which can often result in a lower discharging rate of cake solids.

There is always a compromise when setting the operational parameters of the screw press trying to achieve the highest possible high cake solids with the maximum possible throughput. In theory the optimal performance solution is to utilize an oversized machine allowing for an extended retention time. However, that is not the most cost effective solution. The system should be designed with a careful balance in mind allowing for high cake solids with an acceptable throughput and carefully calculated life cycle costs.

The highest performance rating is determined by the conveyance capacity of the screw press which is mainly a function of the screw speed and how fast the water can drain in

the dewatering and thickening zones. The screw press is operated at its optimum when the parameters are in balance and the fill rate of the auger volume is at its maximum capacity. This means the maximum dewatering performance can be achieved as the screw press can build pressure throughout the entire length of the auger and through the discharge point. If the system is not balanced (e.g. screw speed is too high) the auger will not fill completely and the sludge will be discharged prior to building up pressure in the dewatering zone which is where the optimum dewatering occurs.

FIGURE 5 – SCREW SPEED EFFECT ON THROUGHPUT

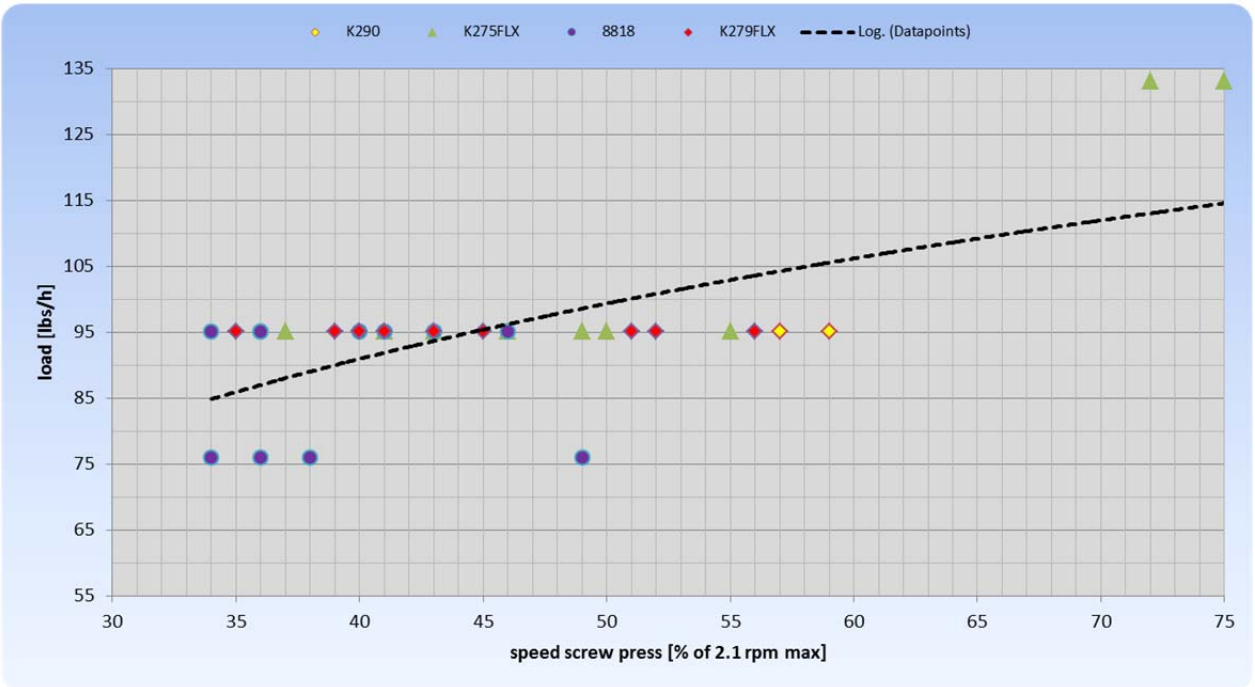

This point of operation changes with many parameters: polymer dosing, polymer injection and mixing system, hydraulic and solids loading, screw speed, and cone pressure. It is a very complex relationship and very sensitive to fluctuations. For peak efficiency and performance the screw press should be operated just below the point that it is overloaded.

FIGURE 6 – SCREW SPEED EFFECT ON CAKE SOLIDS

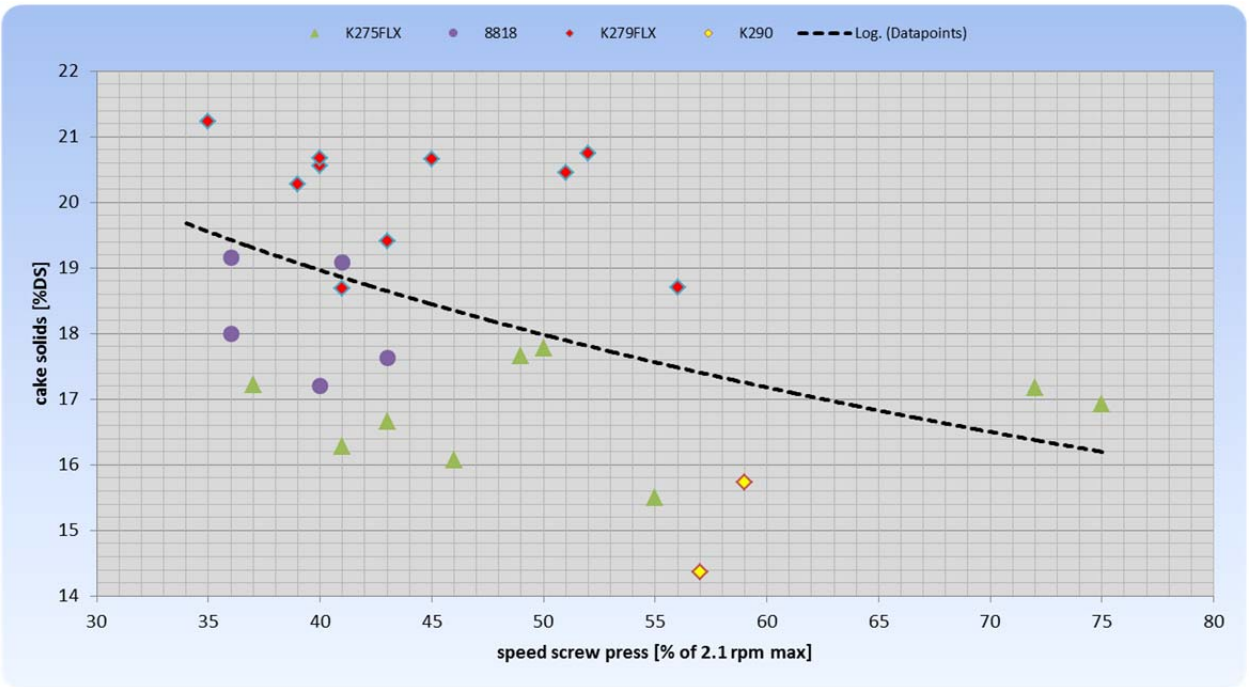

If the screw press is overloaded (i.e the screw speed is too slow for desired hydraulic loading) the pressure build up will continue down into the inlet chamber and if this happens the screw press can no longer operate in a steady state. The system will need to shut down temporarily due to the high pressure in the inlet box (this can happen very frequently when overloading the system). Due to this it would be ideal for the feed pumps to be controlled automatically via the onboard screw press system to allow for real-time throttling thereby keeping the press(es) operational efficiency at its peak.

4.1.3 Outlet Cone Pressure Effect on Cake Solids:

The screw press was operated with several different pressure settings at the cone ranging from 20 to 40 psi. The results indicate that in order to achieve acceptable cake solids the minimum and maximum pressure on the cone can be 20 to 40 psi respectively. As shown in Figure 7 there was no increase in performance when using a lower pressure setting.

Figure 7 – Cone Pressure Effect on Cake Solids

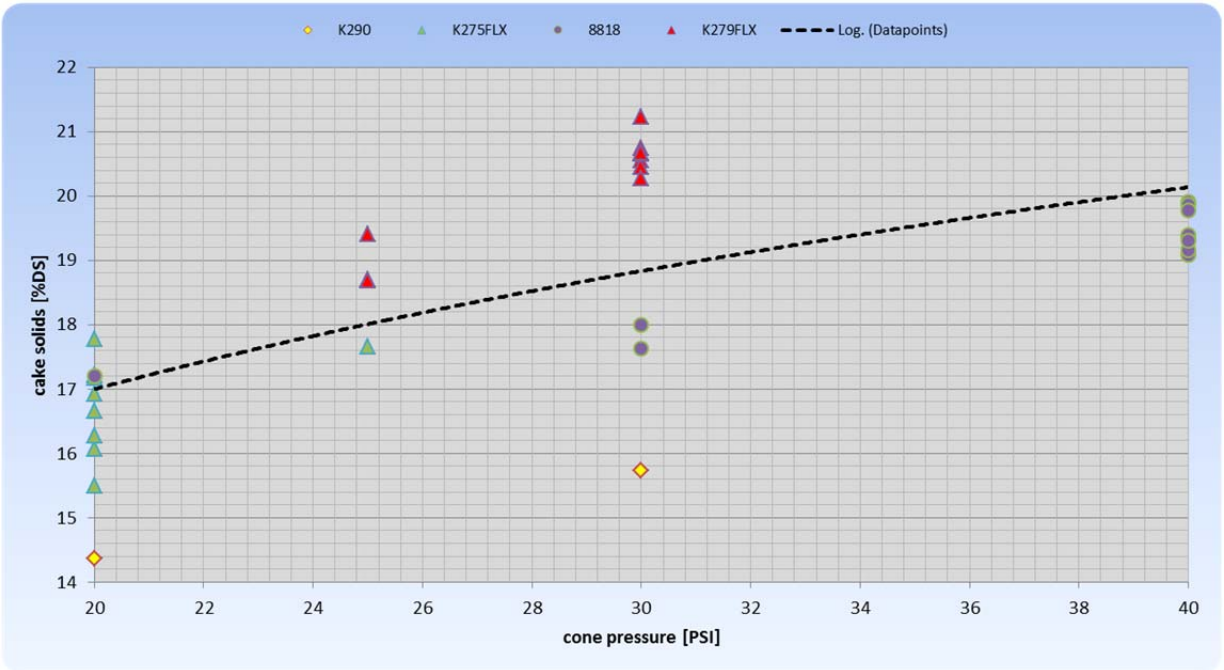

4.1.4 CAPTURE RATE:

The average capture rate of 95% is an acceptable result for this dewatering system, and is fairly typical for the inclined screw press when used with this type of sludge. The capture rate is effected by many different elements and so three of them are represented in the following figures.

Parameters effecting the capture rate:

- Polymer Consumption (Figure 8)
- Screw Press Speed (Figure 9)
- Inlet Feed Pressure on the inlet flange (Figure 10)

FIGURE 8 – POLYMER CONSUMPTION AND CAPTURE RATE

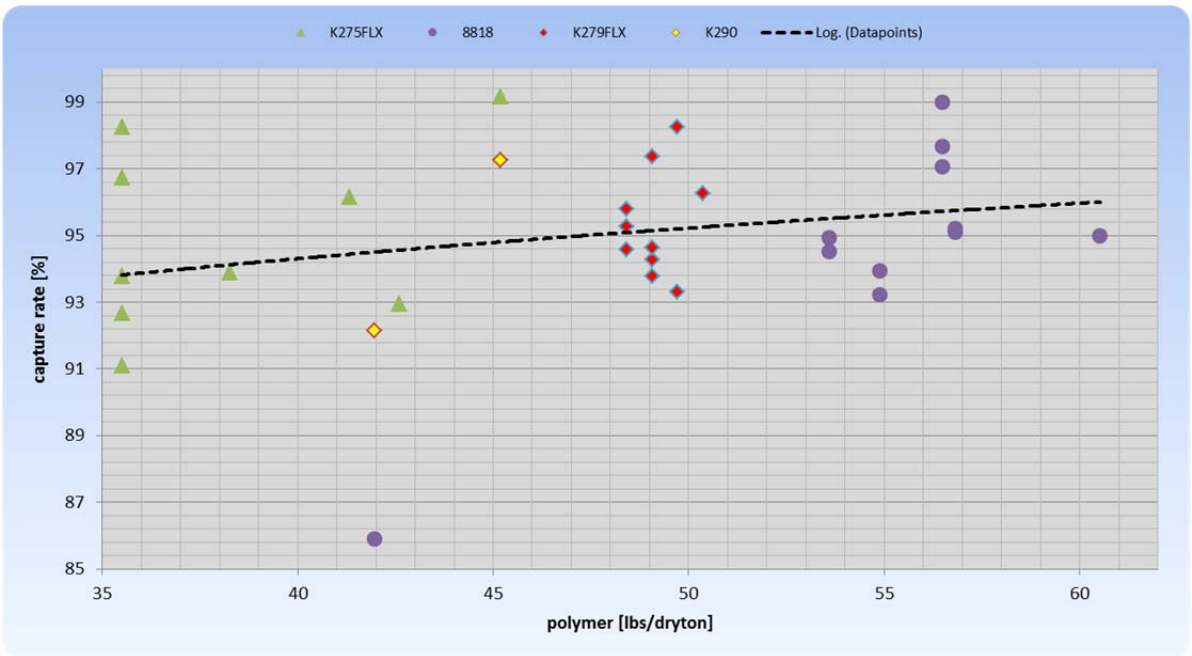

As shown in Figure 8, the capture rate improved with increasing polymer consumption. The first few data points show a lower capture rate which is typical during the initial press setup. Once the optimal settings are determined, consistenly high results can be expected. The capture rate was 93% or better when the polymer consumption rate was between 47 and 57 lbs active/ton DS. The K279 FLX and the 8818 polymere provided the best overall performance and capture rate.

.

FIGURE 9 – SCREW PRESS SPEED EFFECT ON CAPTURE RATE

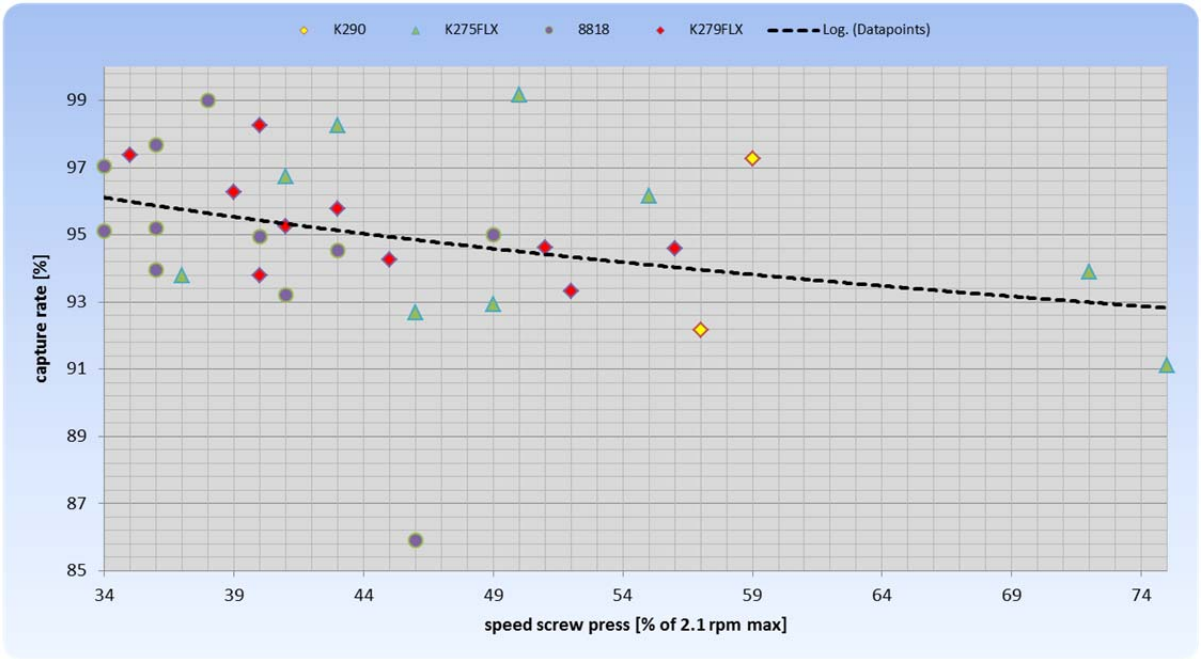

The test results in Figure 9 above show a variation in capture rate which is typically highly affected by the screw press speed. The capture rate drops gradually when operating the screw press with speeds ranging from 34% to 75% of its maximum 2.1 rpm.

FIGURE 10 – INLET FEED PRESSURE EFFECT ON CAPTURE RATE

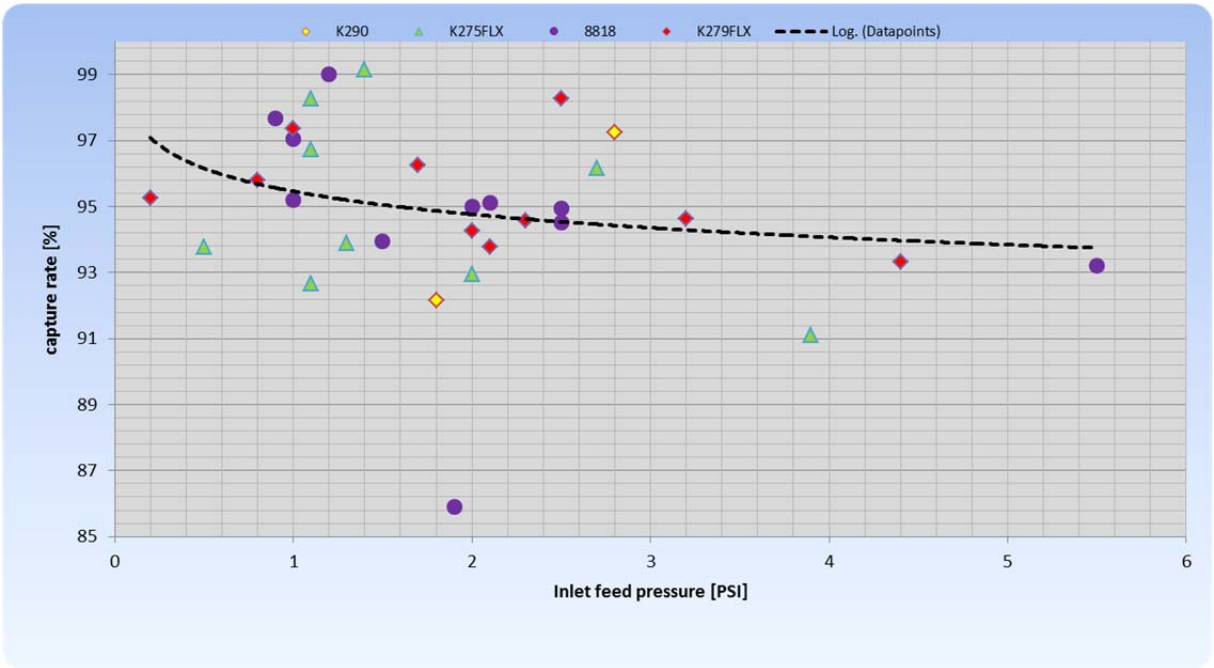

The pressure at the inlet flange applied to the feed also has a significant effect on the capture rate as shown in Figure 10 above. The pressure ratings exceeding approximately 2.5 psi caused the capture rate to decrease below an acceptable level.

5. CONCLUSION:

The pilot test proved the capability of the HUBER screw press to dewater the sludge at the Tampa WWTP. The screw press is able to handle the sludge and produce cake with up to 21.2% DS.

TABLE 6 – SLUDGE TEST CONCLUSION

Anaerobically Digested Sludge Parameters	Best Result Settings	Result at Maximum Throughput
Flow Rate (GPM)	10	14
Solid Loading (lbs./hr. at 1.9% DS)	95	133
Polymer Consumption (lbs. active/ton DS)	49	38.3
Screw Speed (% of max. 2.1 rpm)	35	72
Cake Produced (%DS)	21.2	17.2
Capture Rate (%)	95	93

For the anaerobically digested sludge, cake can be expected to be in the range of 18% – 21% with an average capture rate of 95% or better which is good for anaerobically digested sludge.

EXPECTED PERFORMANCE FOR THE ROS3 Q-800

Anaerobically Digested Sludge Parameters		ROS3 Q-800 24 hrs./day Operations		
Polymer Type		K 275 FLX	K 279 FLX	Poly 8818
Flow Rate	(GPM)	67	67	67
Solid Loading	(lbs./hr. at 1.9% DS)	670	670	670
Polymer Consumption	(lbs. active/ton DS)	35	49	54
Screw Speed	(% of max. 2.1 rpm)	50	40	40
Cake Produced	(%DS)	16	20	18
Capture Rate	(%)	93	95	95

Huber recommends 7 RoS3Q-800 units be installed for this application to be able to meet the 96 MGD plant maximum flow. In order to meet the 56 MGD average flow it would take 4 units as described below.

- 4 units, 24 hrs./day, 67 GPM, 670 lbs./hr., 20% cake, with 2% feed solids
- 4 units, 20 hrs./day, 80 GPM, 800 lbs./hr., 17% cake, with 2% feed solids
- The estimated maintenance hrs./hr. of operation is 0.75% or 1 hr./day.
- The suggested preventative hrs./hr. of operation is 0.75% or 1 hr./day.
- The suggested operator hrs./hr. of operation is 0.75% or 1 hr./day.
- The total connected horsepower will be approximately 35hp for 7 units, 5hp each.
- The daily wash water requirements will be approximately 37,800 gallons.
- Please see attached drawings for dimensions, weights, and structural design forces.

6. SUMMARY OF ACTIVITIES:

Monday – March 18th, 2013

- Set up the pilot unit
- Bench tests performed with all available polymers.

Tuesday – March 19th, 2013 .

- Tests performed with different settings, polymer flows, and polymer concentrations.
- Tests performed with different settings, cake samples analyzed for dryness, and filtrate samples analyzed for capture rate.

Wednesday – March 20th, 2013

- Tests performed with different settings, polymer flows, and polymer concentrations.
- Tests performed with different settings, cake samples analyzed for dryness, and filtrate samples analyzed for capture rate.
- Visitors observed the RoS3Q 280.

Thursday – March 21st, 2013

- Tests performed with different settings, polymer flows, and polymer concentrations.
- Tests performed with different settings, cake samples analyzed for dryness, and filtrate samples analyzed for capture rate.
- Visitors observed the RoS3Q 280.

Friday – March 22nd, 2013

- Tests performed with different settings, polymer flows, and polymer concentrations.
- Tests performed with different settings, cake samples analyzed for dryness, and filtrate samples analyzed for capture rate.
- Loaded and prepared trailer for departure.
- Departed the facility.

We here at Huber Technology would like to extend our gratitude to everyone who participated in the safe and successful Screw Press RoS3Q 280 pilot tests this week at the wastewater treatment plant in Tampa, FL. We enjoyed the opportunity to present Huber Technology's capabilities of helping your facility operate at a more sustainable and efficient level of dewatering. Huber Technology looks forward to providing your facility highly reliable products in the future.

APPENDICES

Appendix A – Screw Press RoS3Q 280 Pilot Test Photos

Appendix A – SCREW PRESS ROS3Q 280 Pilot Test Photos

Pilot Unit

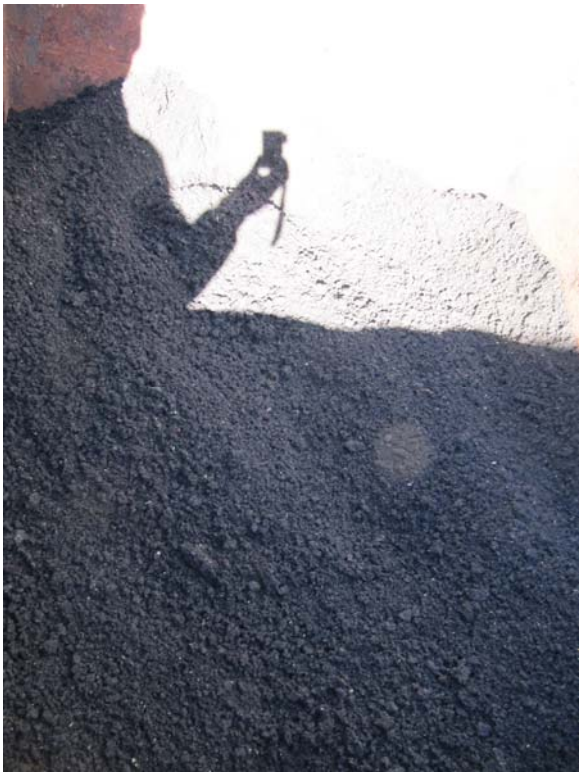

Pilot Test Cake

Pilot Unit Mobile Laboratory

Date: **June 6, 2013**

To: **To Whom It May Concern**

Reference: **Howard F. Curren AWTP – Tampa, FL**

Subject: **Sludge Dewatering Screw Press Q800**

We are pleased to provide you with the following preliminary budget worksheet for the Tampa, Fl project. By choosing the Huber Technology ROTAMAT Series™ sludge dewatering system, you are selecting state-of-the-art technology that provides optimized operational efficiency.

The Huber Screw Press operates by blending polymer into the thin sludge that is pumped through a flocculation pipe reactor. Flocculated sludge flows into the screw press that includes a wedge wire screen basket. A slowly rotating screw, driven by a VFD, conveys the sludge gently upward through the inclined basket. Water drains by gravity through the screen. The screw flights are provided with a brush for continuous internal cleaning of the screen basket. Periodically the screen basket is also cleaned with spray water from the outside. The screw stops and reverses rotating the basket through 360° allowing the spray bar to fully wash the exterior surface of the basket within the enclosure. The screw pushes dewatered sludge to the upper end of the basket where it compressed against a pressure cone maximizing dewatering performance before discharging and dropping down a chute into a dumpster.

The Screw Press RoS3Q provides the following benefits:

Design Benefits

- High discharge point
- Compact unit with small footprint and low weight
- Complete enclosure prevents emission of odor, vapors and spray water
- Made of stainless steel for long life
- Pickled and passivated in an acid bath for perfect finishing and corrosion protection

Operational Benefits

- Full-automatic and continuous operation
- Minimal operator attendance
- Easy to start-up and shut-down
- Few wear parts
- Easy maintenance
- No need for hosing down
- No noise or vibrations

- No emission of odor or spray water (aerosols)

Cost Benefit

- Very low wash water consumption
- Low power consumption
- Little operator attendance
- Very low maintenance costs
- Low investment costs

A NEMA 4X panel housing the PLC and control switches is provided with each piece of equipment to monitor and control system performance. Critical performance parameters are continuously monitored to ensure that trouble free operation is being provided at all times.

This worksheet is for your planning and use. Please carefully review our design criteria for peak flow rate, and design conditions to ensure that the criteria used matches actual project parameters. When detailed project design commences, please contact us for a review of all design parameters, including dimensions and equipment requirements. Once you have confirmed your design parameters and budget, we would like to make available to you, at your request, a complete designer's package including a formalized proposal, detailed specification, and general arrangement drawings.

Huber Technology's price for the enclosed design is **$See below**. This quoted price includes the equipment as described, freight to site, and start-up by qualified personnel. This quote excludes any taxes that may be applicable. The above information is to be used for budget estimates only and is valid for 60 days.

Please do not hesitate to contact us if you have any questions or would like further information. Thank you for your interest in Huber Technology and our products. We look forward to working with you on this project.

With best regards,
Huber Technology, Inc.

Steve Macomber
SouthEast Regional Sales Manager

DESCRIPTION
ROTAMAT® RoS3 Q800 – Sludge Dewatering Press Model: Seven (7) x RoS3 Q800 Screw Press 4 duty, 3 Standby (to handle the ultimate of 96 mgd, if needed) **Pricing: $2,300,000** Including: • RoS3-Q800 Screw Press in 304L stainless steel construction; with full submersion passivated surface treatment for superior corrosion protection. • Fully enclosed basket • Shafted screw with integrated maintenance free bearing • 10º inclined auger tube • 5Hp, Class 1 / Division 2 drive motor, 460VAC, 60Hz, 3ph • Polymer Makedown System • Feed Pump • Polymer and Sludge Feed Flow Meter • NEMA 4X stainless steel control panel with Allen Bradley PLC and operator interface • Standard manufacturer's services are included. Extra days/trips are available on a per diem rate upon request **System Sizing:** Huber recommends 7 RoS3Q-800 units be installed for this application to be able to meet the 96 MGD plant maximum flow. In order to meet the 56 MGD average flow Huber Recommends 4 units as described below. • 4 units, 24 hrs./day, 67 GPM, 670 lbs./hr., 20% cake, with 2% feed solids • 4 units, 20 hrs./day, 80 GPM, 800 lbs./hr., 17% cake, with 2% feed solids

Notes

1. Equipment specification is available upon request
2. If there are site-specific hydraulic constrains that must be applied, please consult the manufacturer's representative to ensure compatibility with the proposed system
3. Electrical disconnects required per local NEC code are not included in this proposal
4. Huber Technology warrants all components of the system against faulty workmanship and materials for a period of 12 months from date of start-up or 18 months after shipment which ever occurs first
5. Budget estimate is based on Huber Technology's standard Terms & Conditions and is quoted in US$ unless otherwise stated
6. Equipment lead time from approval of shop drawings is expected to be around 26 – 28 weeks.
7. Equipment sizing is based on the diameter of the screw i.e
    a. RoS3 Q280
    b. RoS3 Q440
    c. RoS3 Q800

PRIME SOLUTIONS

Prime Solution Rotary Fan Press® Pilot Testing Report For Sludge Dewatering

March 18th – 22nd, 2013

Howard F. Curren Advanced WWTP

Prime Solution, Inc. – 610 S. Platt Street – Otsego, MI 49078 USA – PH: 269-694-6666 – FX: 269-694-1298
www.psirotary.com

Table of Contents

Key Information…… 3

Summary……..……. 4

Equipment Description…….. 4-5

Pilot Testing Results…….. 6-8

On-Site Pictures……. 9

Conclusion……..……... 10

Key Information

Project Site:	Howard F. Curren Advanced WWTP 306 E. Jackson Street 6E Tampa, FL 33602
Plant Contact:	Mr. Rory Jones, E.I. PH: (813) 274-7045 E-Mail: rory.jones@tampagov.net
Engineer:	Hazen and Sawyer Mr. Jacob Porter, P.E. PH: (813) 630-4498 E-Mail: jporter@hazenandsawyer.com
PSI Representative:	Litkenhaus & Associates Mr. Tom Baber PH: (904) 591-1819 E-Mail: litkenhaus@mac.com
Test Date(s):	March 19th – 22nd, 2013
Pilot Equipment:	RFP36D 1.5" Channel Width
Sludge/Slurry Tested:	Anaerobically Digested Sludge 60% Primary / 40% Secondary
Results:	Feed Solids (% TS): 1.1 – 2.0% Cake Solids (% TS): 9.1 – 23.3% Capture Rate (% TSS) – 97.4% (average) kW Usage (Press) – 1.7/hr. (average)
Lab(s):	Prime Solution, Inc. / City of Tampa, FL
Pilot Testing Personnel:	Mr. Greg Slohoda / Mr. Joey P. Dendel Prime Solution, Inc. PH: (269) 355-3616 / (269) 694-6666 greg@psirotary.com / jpdendel@psirotary.com
Prime Solution Regional Manager:	Mr. Greg Slohoda
Report Prepared By:	Mr. Greg Slohoda & Mr. Joey P. Dendel

Summary

On-site pilot testing was performed by Prime Solution, Inc. the week of March 18th, 2013 at the Howard F. Curren Advanced WWTP in Tampa, FL. The purpose of the pilot test was to determine the dewaterability of the noted material and to obtain processing information so as to be able to size equipment that will meet the needs of the Plant. Sludge from the plant digester was tested. For this pilot two (2) polymers were selected based on previous experience with similar sludge.

A formal budget proposal for capital purchase of the unit will be provided to the City of Tampa, FL at a later date.

The mobile pilot unit used for this test was the full scale Prime Solution Rotary Fan Press® model #RFP36D including all of the necessary ancillary equipment to condition the sludge, pump the filtrate back to the plant and transfer the cake solids for disposal.

-RFP36D Rotary Fan Press	- Inline Grinder
- Emulsion Polymer PrimeBlend System	- Flocculator Assembly
- Rotary Lobe Feed Pump	- Folding Cake Conveyor
- Water Boost Pump	- Control Panel
- Filtrate Pump	- Chemical Feed System

Equipment Description

The Rotary Fan Press operates using the low differential pressure between the incoming conditioned sludge and the outgoing sludge cake combined with the very slow (< 1 rpm) rotational motion of the filter screens to advance the sludge through the press. As the conditioned sludge enters the annular space between the two wedgewire filter screens a pressure differential develops within the press where the liquid portion of the conditioned sludge seeks to the path of least resistance through the filter screens. The remaining solids are collected inside the two filter screens traveling towards the solids discharge of the press. At the discharge of the press an adjustable restrictor arm slows down the solids forming a “cake” plug. As the plug builds within the restriction discharge area it pushes towards the inside walls of the filter screens and the slow rotation/friction of the filter screens continuously moves the cake solids pass the restrictor arm to be discharged for disposal or further processing. Operation of the Rotary Fan

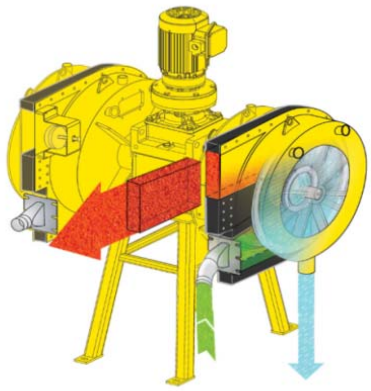

Equipment Description

Press can either be continuously or intermittent depending on your application. Clean-up is a simple push of a button, which will automatically run the wash cycle. Four sizes (18, 24, 36 and 48) are available with the 24 unit expandable to two dewatering channels and the 36 and 48 units expandable up to four dewatering channels. Units ordered with one dewatering channel can add on the additional dewatering channels in the future for additional capacity. The slow moving, small footprint, totally enclosed design with the lowest maintenance of any mechanical dewatering technology provides for long sustainable dewatering.

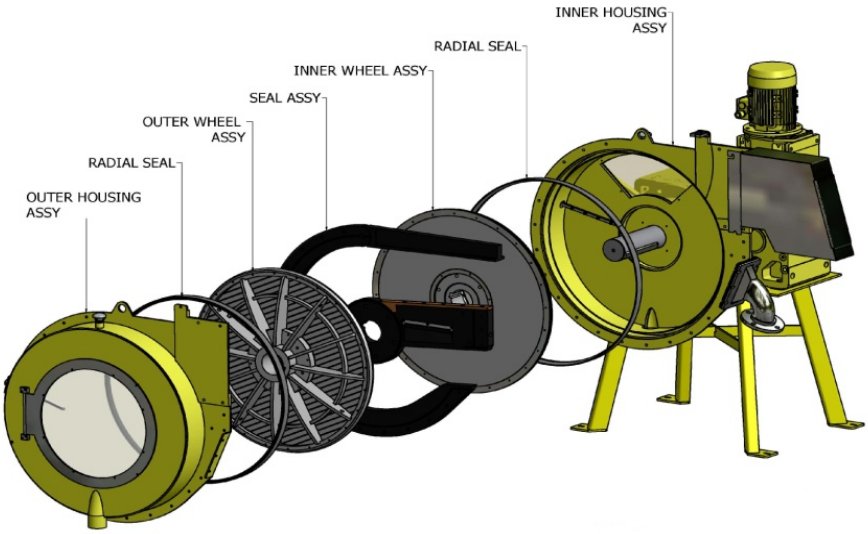

Figure 1 – Basic Construction of the Prime Solution Rotary Fan Press®

The Rotary Fan Press has very few mechanical parts as illustrated above in Figure 1. The simple slow moving dewatering channel assembly provides for a clean enclosed working environment, long service life and with standard tools any adjustments and/or repairs can be completed simply and quickly.

The unit is controlled by a touch screen/PLC which provides for fine adjustments of the system. This system gives infinitesimal control of the unit and allows for accurate detailed refinement of the operating parameters of the unit. From the touch screen the operator has the option to control the dewatering process from the sludge feed all the way through to sludge cake transfer, thus interlocking the entire system for semi-automatic operation.

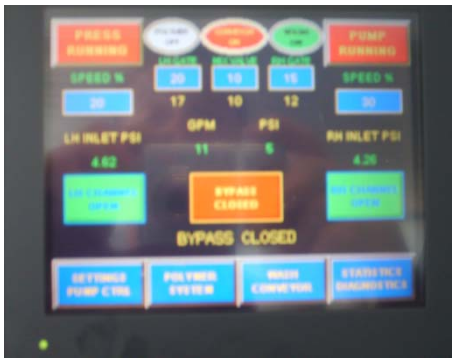

Pilot Testing Results

Pilot Information						Polymer					Rotary Fan Press						Performance			
			Channel Used		Sludge Feed Rate (gpm)								Inlet PSI		Gate PSI					
Run #	Date	Time	LH	RH		GPH	Type	Act. %	Dil. H2O (gpm)	Dosage (lbs./d.t.)	Speed (rpm)	kW (press)	LH	RH	LH	RH	Feed (% TS)	Cake (% TS)	Sludge lbs./hr.	Capture Rate (% TSS)
1	3/19/13	9:00	X	X	6	0.25	8848	40%	1.10	32.1	0.30	1.7	0.00	0.48	19	20	1.8%	9.5%	54.0	98.9%
1	3/19/13	10:00	X	X	5	0.70	8848	40%	2.70	114.2	0.35	1.7	0.25	0.48	14	15	1.7%	12.1%	42.5	96.5%
1	3/19/13	11:00	X	X	7	0.25	8848	40%	0.75	29.1	0.40	1.8	0.57	0.97	15	15	1.7%	9.1%	59.6	92.9%
1	3/19/13	12:00	X	X	5	0.31	8848 Ferric	40%	1.05	50.6	0.30	1.7	0.00	0.68	15	15	1.7%	9.7%	42.5	98.8%
1	3/19/13	13:00	-	X	7	0.23	8848 Ferric	40%	0.90	41.4	0.65	1.8	-	1.70	-	30	1.1%	13.0%	38.5	98.2%
1	3/19/13	14:00	-	X	7	0.23	8848	40%	0.85	28.5	0.65	1.8	-	0.71	-	30	1.6%	15.2%	56.0	93.8%
2	3/20/13	9:00	-	X	7	0.31	279	46%	0.95	41.5	0.65	1.8	-	0.63	-	30	1.7%	12.9%	59.6	98.8%
2	3/20/13	10:00	X	X	11	0.40	279	46%	1.10	36.2	0.65	1.7	2.34	1.86	30	30	1.6%	23.3%	88.1	97.5%
2	3/20/13	11:00	X	X	11	0.50	279	46%	1.50	45.3	0.65	1.7	0.00	1.56	30	30	1.6%	14.5%	88.1	98.8%
2	3/20/13	12:00	X	X	13	0.55	279	46%	1.80	45.0	0.65	1.7	1.60	1.65	30	28	1.5%	15.1%	97.6	98.7%
2	3/20/13	13:00	X	X	12	0.58	279	46%	1.70	48.2	0.60	1.7	0.90	1.16	30	28	1.6%	15.3%	96.1	98.8%
2	3/20/13	14:00	X	X	13	0.58	279	46%	1.65	44.5	0.60	1.7	0.75	0.80	30	28	1.6%	18.0%	104.1	98.8%
3	3/21/13	9:00	X	X	16	0.72	279	46%	2.00	47.8	0.65	1.7	1.70	1.62	30	28	1.5%	16.8%	120.1	98.7%
3	3/21/13	10:00	X	X	15	0.78	279	46%	2.55	51.8	0.65	1.7	1.70	0.48	40	40	1.6%	17.6%	120.1	97.5%
3	3/21/13	11:00	X	X	20	0.95	279	46%	2.85	47.3	1.00	1.7	0.00	0.61	59	50	1.6%	12.9%	160.1	97.5%
3	3/21/13	12:00	X	X	21	0.98	279	46%	3.25	41.3	0.85	1.7	0.00	0.74	59	50	1.8%	14.0%	189.2	98.9%
3	3/21/13	13:00	X	X	10	0.54	279	46%	1.80	50.6	0.75	1.7	0.05	0.59	59	50	1.7%	16.3%	85.1	98.8%
3	3/21/13	14:00	X	X	10	0.54	279	46%	1.60	53.8	0.45	1.7	0.40	0.50	30	28	1.6%	13.4%	80.1	98.8%
4	3/22/13	8:00	X	X	6	0.65	279	46%	2.10	95.9	0.45	1.7	2.50	2.80	30	28	1.8%	11.8%	54.0	98.9%
4	3/22/13	9:00	X	X	6	0.48	279	46%	1.65	63.8	0.55	1.7	0.39	0.56	30	30	2.0%	12.3%	60.1	99.0%
4	3/22/13	10:00	X	X	7	0.48	279	46%	1.65	54.7	0.75	1.7	0.51	0.46	30	30	2.0%	15.4%	70.1	98.0%
4	3/22/13	11:00	-	X	4	0.48	279	46%	1.80	100.7	0.90	1.7	-	1.92	-	27	1.9%	12.2%	38.0	89.5%
4	3/22/13	12:00	-	X	6	0.28	279	46%	0.90	43.8	0.90	1.7	-	1.90	-	26	1.7%	15.1%	51.0	95.3%
4	3/22/13	13:00	-	X	5	0.28	279	46%	0.85	49.6	0.90	1.7	-	1.05	-	27	1.8%	14.6%	45.0	95.6%

Pilot Testing Results

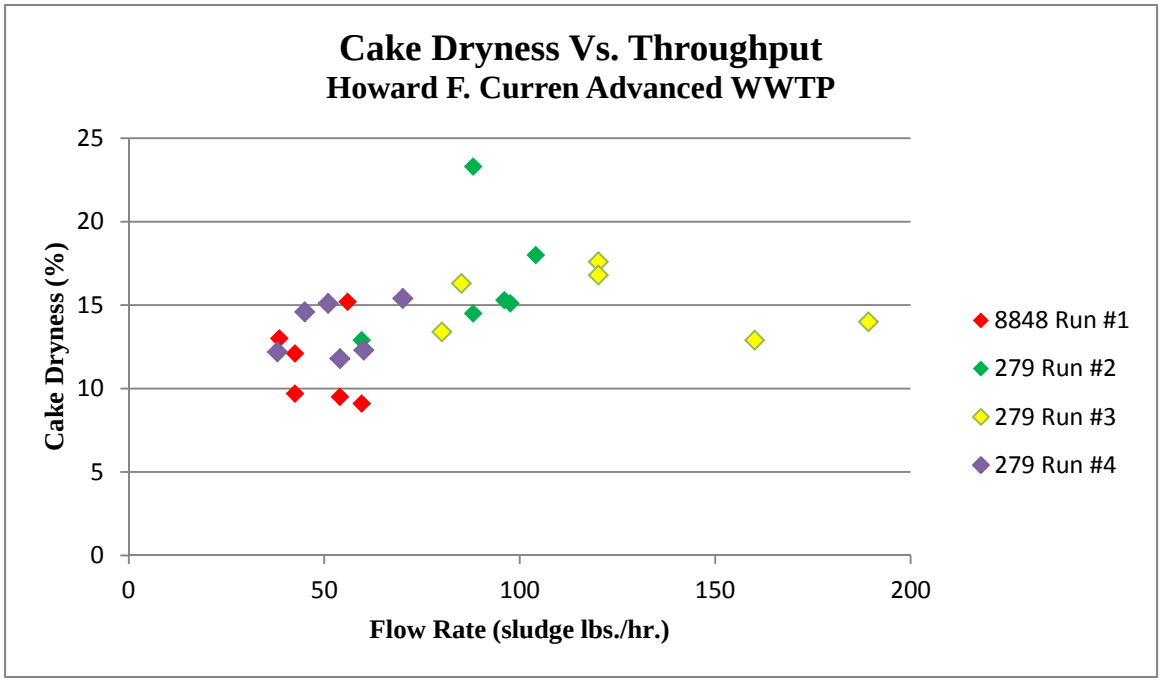

The dewatering rate is scalable by using the hydraulic throughput (listed in gpm) per square foot of screen area by the square foot of filtration area per dewatering channel of each of the Rotary Fan Press sizes listed:

RFP18	2.52 sq. ft./ch.
RFP24	4.28 sq. ft./ch.
RFP36	10.32 sq. ft./ch.
RFP48	18.82 sq. ft./ch.

Testing Overview:

The intent of the pilot test was to determine the dewaterability of the anaerobically digested wastewater treatment plant sludge that is produced at the Howard F. Curren Advanced WWTP. Flow rates were adjusted to achieve the driest cake possible prior to sample collections which began at 9:00 a.m. the first three days of testing and 8:00 a.m. the last day of testing. Once all adjustments were made and the unit was dialed in, the unit was allowed to produce material for a period of six hours. Samples for each of the streams (Feed, Cake and Filtrate) were taken every hour for six hours per testing day.

Pilot Testing Results

Testing Results:

The Rotary Fan Press operated very consistently over the trial period with samples taken every hour for six hours/day and stored in a cooler for the City of Tampa to collect at the end each testing day. The feed solids ranged from 1.1 - 2.0% solids. Average capture rates for the pilot were greater than 97%. Cake dryness for the sludge ranged from 9.1 – 23.3%.

Daily Testing Log:

3/18/2013
Day 1 was spent setting up the unit for pilot testing the next four consecutive days. Setup went smooth without any hiccups and we were given the directions of how the testing was to go for the rest of the week. We were to be on-site ready to collect samples beginning at 9:00 a.m. Tuesday thru Thursday and 8:00 a.m. on Friday.

3/19/2013
Day 2 (run #1) began the first day of testing with six (6) samples of each stream (Feed, Cake and Filtrate) being collected beginning at 9:00 a.m. and ending at 2:00 p.m. For the first day of testing we tried a BASF cationic polymer with an emulsion activity of 40% which produced lower than expected results. The sludge seemed to be “tacky” so we tried an addition of Ferric Chloride for the 12:00 p.m. and 1:00 p.m. sample collections. The Ferric did not seem to have a great significance in cake dryness or lowering polymer consumption.

3/20/2013
Day 3 (run #2) was the first day we utilized an Ashland cationic polymer with an emulsion activity of 46% which produced better results than the polymer tried the previous day. The press ran consistently with visibly greater cake dryness than the previous day of testing.

3/21/2013
Day 4 (run #3) continued with the Ashland polymer for testing. We pushed the flow rate up on the machine this day compared to the previous days. The machine ran consistent again without any hiccups and produced cake which was visibly relatively dry.

3/22/2013
Day 5 (run #4) was the final day of testing with sample collections beginning at 8:00 a.m. and ending at 1:00 p.m. We dialed the flow rate back down due to the sludge not reacting as well with the polymer as the previous days, we stuck with the Ashland polymer but the polymer consumption seemed to spike considerably from the days before. The last day saw many groups of people visiting the plant to see all the technologies at work. After the last sample was collected we ran the automatic wash cycle while we cleaned the outside of the machine and inside of the trailer then shut down the machine which takes no time at all and got everything wrapped up for departure.

On-Site Pictures

Conclusion

Pilot testing was performed at the Howard F. Curren Advanced WWTP in Tampa, FL the week of March 18th, 2013. The piloting trial presented in this report clearly demonstrates the capability of the Prime Solution Rotary Fan Press® dewatering technology to effectively dewater the WWTP sludge. The simple easy automatic operation of the Rotary Fan Press was demonstrated along with the consistency to produce cake solids while using low energy and washwater. The slow moving (< 1 rpm), small footprint, totally enclosed design with the lowest maintenance of any mechanical dewatering technology provides for long sustainable dewatering.

It has been represented to Prime Solution that a pumping rate of 278 gpm is the requirement for the project. With average feed solids of 2.0% the loading requirements for the press will be 2,782 dry lbs./hr. Based on the testing performed with the anaerobically digested sludge containing struvite, data obtained from the pilot, and information provided by the City of Tampa & Hazen and Sawyer, it is estimated that three (3) Prime Solution Rotary Fan Press® Model #RFP48Q's are a fit for the processing needs estimated by the Howard F. Curren Advanced WWTP.

Prime Solution, Inc. would like to express its gratitude to the City of Tampa, FL & Hazen and Sawyer for the opportunity and for their support during the piloting test. This report is not to be shared in whole or in part with third parties outside of Hazen and Sawyer or the City of Tampa, FL without the express written consent of Prime Solution, Inc.

Regards,

Greg Slohoda
Regional Sales Manager
Prime Solution, Inc.
PH: (269) 355-3616
greg@psirotary.com

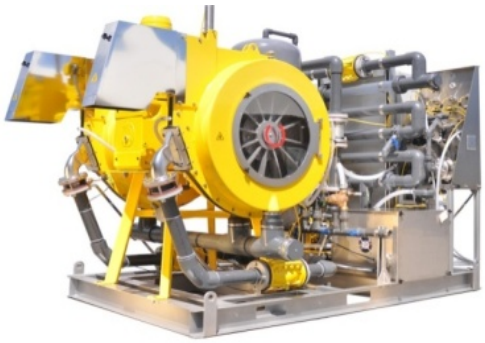

SLUDGE DEWATERING RFP48Q-SK
BUDGETARY PROPOSAL FOR:

HAZEN AND SAWYER, PC

(Project: Howard F. Curren WWTP - Tampa, FL)

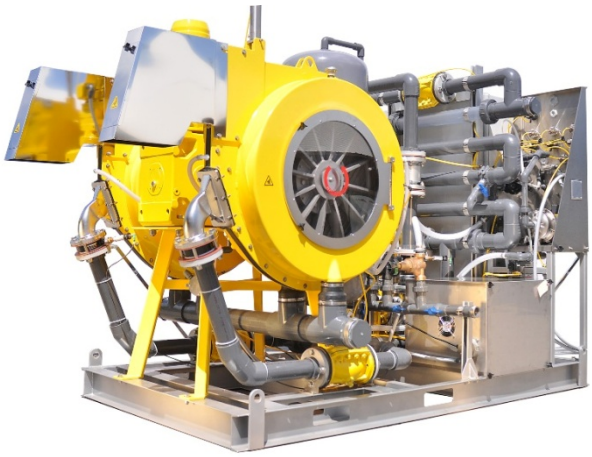

PRIME SOLUTION, INC.
610 S. PLATT STREET
OTSEGO, MI 49078
USA

PH: (269) 694-6666
FX: (269) 694-1298
www.psirotary.com

BUDGETARY PROPOSAL

To: Hazen and Sawyer, PC
10002 Princess Palm Ave.
Suite 200
Tampa, FL 33619

Contact: Mr. Jacob Porter, P.E.
PH: (813) 630-4498
jporter@hazenandsawyer.com

PSI Rep: Litkenhaus & Associates
Contact: Mr. Tom Baber
PH: (904) 591-1819
litkenhaus@mac.com

We hereby submit specifications and estimates for: Three (3) Quad Channel 48" Rotary Fan Press's complete with ancillary equipment as listed below in this Scope of Supply. All equipment listed below is factory tested, pre-plumbed/wired and ready for field installation. Sludge type, feed solids, volatile solids, pretreatment, polymer selection, desired cake solids and process variations will affect performance of the equipment. Delivery, installation, system integration, utility and piping connections not included and/or listed below in this Scope of Supply shall be provided by others. The equipment proposed is based on dewatering an Anaerobically Digested Mixed Sludge (60% Primary/40% Secondary) with an average Feed Solids concentration of 2.0%, Flow Rate of 278 gpm running 24/7. A Pilot Trial was completed March 19th – 22nd, 2013 at the Howard F. Curren WWTP in Tampa, FL.

ROTARY FAN PRESS EQUIPMENT SCOPE OF SUPPLY

- Three (3) RFP48Q – 48" Rotary Fan Press, 7.5 hp Direct Gear Drive System, Epoxy Coated Carbon Steel Housings and Base, Pneumatic Sludge Discharge Gate Control, Pneumatic Flow Control, All 304 Stainless Water Jetted Filter Plates and Support Rotor Assembly, Intermittent Filter Plate Wash with Valves (requires minimum 45 psi @ 20 gpm intermittently per channel).
- Three (3) RFP Skid Platform, Epoxy Coated Carbon Steel Welded Construction. Anchor Bolts To Be Provided By Others.
- Three (3) In-Line Full Port Pneumatic Mixer with 4-Port Injection Ring.
- Three (3) PVC Sludge Retention Manifold with Clear Site Tube Cleanout.
- Three (3) Pneumatic Sludge By-Pass Control Valve.
- Three (3) Sludge Feed Magnetic Flow Meter.
- Three (3) Sludge Feed Pump (Rotary Lobe) with VFD Gear Drive Direct Coupled On Common Base.
- Three (3) Air Compressor with Receiver.
- Three (3) Emulsion Polymer Feed/Blend System, with Integrated Controls (water required 45 psi @ 35 gpm).
- Three (3) Auto Process Control Package (semi-unattended operation) For System As Listed In This Proposal.
- Three (3) Central Operator Panel with Touch Screen Controls, Six Inch (6") Display, Lamps and Main Disconnect Power. System To Include Operation of Associated Dewatering Equipment As Listed In This Scope of Supply, 480 Volt/3 Phase/60 Hertz (Unless Specified Otherwise), NEMA 4X Rated Enclosure.
- Four (4) Copies of Operational/Maintenance Manuals.
- One (1) One Day Installation Inspection.
- One (1) Three Day Start-Up/Training/Performance Testing Trip.

We Propose to furnish material as stated, FOB Factory, freight allowed to job site (offloading by others), complete and in accordance with the above specifications for the sum of:

U.S. Dollars: $1,767,500.00

All applicable taxes/fees are the full responsibility of the Purchaser/Customer and not included as part of this proposal. Any non-payment amounts, fines, fees, expenses caused thereof shall be the full payment responsibility of the Purchaser/Customer to any and all parties and/or authorities as the case may be.

ESTIMATED PERFORMANCE (sludge/process dependent)	
% Dry Cake Solids:	14 – 18% (consistent sludge dependent)
Dry Solids Throughput:	2,782 lbs./hr. (based on 278 gpm at 2% feed solids)
Polymer Type:	Ashland 279 FLX
Polymer Usage:	30 – 50 lbs./dry ton (consistent sludge dependent)
% Capture Rate:	>95%
Total HP:	18.25/Machine
Washwater Requirement:	20 gpm/channel (operator dependent)

ESTIMATED OPERATION/MAINTENANCE COST

DESCRIPTION	PRICE	ESTIMATED LIFE
Radial Seals	$1,715.00/channel	6,000 – 8,000 hours
Radial Seal Tubes	$193.00/channel	6,000 – 8,000 hours
Scraper Caps	$878.00/channel	4,000 – 6,000 hours
Gearbox Oil	Price Varies (43.3 qts.)/Machine	10,000 hours

Note: The listed data is compiled for making assumptions for estimating performance and sizing of equipment only. Any changes or lack of information provided could affect any assumptions made and at no time shall it be interpreted as a contractual guarantee.

Delivery: 20 – 24 weeks from receipt of firm purchase order, receipt of down payment and approval of submittal(s) (1 time shipment only).

Submittals: 20 working days from receipt of purchase order with complete project information supplied by Purchaser/Customer.

Clarifications, Exceptions & Recommendations:

Any system integration, ancillary equipment, services, access platforms, stairs and/or handrails not listed in this Scope of Supply shall not be part of this proposal and shall be provided by others if required.

All equipment off loading, site storage, installation and interconnecting wiring and piping between all equipment listed and other ancillary equipment or sources shall be by others as selected or retained by the Purchaser/Customer.

Any and all required polymers, testing fees, etc. not listed as included in the Prime Solution, Inc. Equipment Scope of Supply shall be provided and/or paid for by others. The Purchaser/Customer understands and agrees that the type of sludge, pretreatment process, pretreatment chemistry, feed solids, polymer selection, sludge age, any/all changes (pH, volatile solids, etc.) to the sludge/slurry characteristic(s) not clearly defined in any written documentation will affect the sludge's/slurry's ability to be dewatered and performance/capacity of the equipment. The Purchaser/Customer shall be responsible to provide all suitable pretreatment chemistry for obtaining a suitable and stable flocculated sludge/slurry for mechanical dewatering to achieve any performance requirements. Prime Solution, Inc. can only estimate production performance based upon information supplied by the engineer and/or Purchaser/Customer, lab sample(s) or on-site pilot testing and does not take any responsibility for final equipment performance unless overall process is approved by Prime Solution, Inc. in writing. Any changes and/or omissions in any way to the type of sludge/slurry listed in any specifications that affects dewaterability of the sludge/slurry shall release Prime Solution, Inc. of any/all performance responsibility.

Prime Solution, Inc. is furnishing the dewatering equipment only and is only subject to the Equipment Warranty and/or Scope of Supply. All equipment, material and components manufactured by others used in the design of the dewatering system shall have the same warranty afforded to Prime Solution, Inc. and is subject to and stipulated by the respective manufacturer's warranty provided that the required maintenance has been performed by the Purchaser/Customer. Prime Solution, Inc. does not provide any guarantee or warranty of the process, chemistry or other parts and products purchased/supplied by others whatsoever, whether express, implied or statutory, including but not limited to, any warranty of merchantability or fitness for a particular purpose or any warranty that the contents of those parts and products will be suitable and error free. Any damages to the Prime Solution, Inc. equipment caused by parts, products or services provided by others will not be covered by the equipment warranty.

In no respect shall Prime Solution, Inc. incur any liability for any damages, direct, indirect, special, or consequential arising out of, resulting from, or any way connected to the use of those parts or products provided by others, whether or not based upon warranty, contract, tort, or otherwise; whether or not injury was sustained by persons or property or otherwise; and whether or not loss was sustained from, or arose out of, the results of parts and products or any services provided by others.

If there are any delays in shipment by the Purchaser/Customer, the Purchaser/Customer agrees to pay storage charges equal to 0.5% of the total project order per month the order is held by Prime Solution, Inc. for shipment.

Should any additional service trips, equipment, supplies and/or labor be required by Prime Solution, Inc. to assist the Purchaser/Customer beyond what is listed in this Scope of Supply, these charges shall be in addition to the price listed in this Scope of Supply. On-Site service for process or chemistry after installation and start-up will be subject to additional charges and is not included in the equipment warranty.

Terms: (95%) due net 30 days from ship date, balance (5%) due net 30 days after approved start-up not to exceed 60 days from shipment. All other services shall be net 30 days.

Payment terms may not be changed without the written authorization of Prime Solution, Inc. Any shipments delayed by Purchaser/Customer, Prime Solution, Inc. reserves the right to invoice and when full payment is received, pass title to the

Purchaser/Customer; Purchaser/Customer agrees to remit the amount due at the times stated, as if equipment had shipped. Any and all costs of storage shall be at the Purchaser's/Customer's expense.

Unauthorized retention of payment by Purchaser/Customer for any reason shall be subjected to a service charge of 2% compounded per month and any collection expenses will be added to total amount due by the Purchaser/Customer.

All orders shall be considered final and the Purchaser/Customer shall be responsible for payments as listed above. Should the Purchaser/Customer wish to cancel this order at any time, the Purchaser/Customer shall be responsible to reimburse/pay Prime Solution, Inc. within fifteen (15) days of the cancellation notice for all costs Prime Solution, Inc. has associated with this order. The Purchaser/Customer also recognizes that ownership for this order does not pass to the Purchaser/Customer until payment in full is received by Prime Solution, Inc. Prime Solution, Inc. reserves the right to take back the possession of any/all items delivered to the Purchaser/Customer that full and final payment is not received within thirty (30) days of the terms as outlined above. Any and all costs, including but not limited to actual attorney fees associated with the recovery of items and for non-payment, or to obtain payment, shall be the responsibility of the Purchaser/Customer.

This Proposal is the complete agreement between Prime Solution, Inc. and the Purchaser/Customer, and supersedes any prior discussions, negotiations, representations or understanding of the parties. No other agreements, representations, or understandings not specifically contained herein shall be binding upon the Parties to this Proposal.

All material is guaranteed to be as specified in this Scope of Supply. All work is to be completed in a professional manner according to standard practices. Any alteration or deviation from the above specifications which involve extra costs will be made only upon receipt of an authorized written change order and will be shown on subsequent invoices as amounts over above the original estimate. It is understood that Prime Solution, Inc. will not be penalized for delays caused by change orders, strikes, accidents, war or rebellion, acts of terrorism or delays caused by acts of nature. Our workers are covered by Worker's Compensation Insurance. Purchaser/Customer agrees to furnish all other appropriate and necessary insurance's coverage's.

It is the intent of the Parties that this proposal be non-modifiable unless such modification or variation is agreed to in writing. Given this specific intent, this Proposal may not be varied or modified in any manner whatsoever, except in subsequent writing that is executed and signed by an authorized representative of both Parties.

Any controversy or claim between or among the Parties, including but not limited to those arising out of or relating to this Agreement, including any claim based on or arising from an alleged tort, shall be determined by and through binding arbitration. The arbitration shall be commenced and conducted in accordance with the Commercial Arbitration Rules of the American Arbitration Association. The arbitration shall be conducted before one (1) arbitrator selected either by the parties, or, if the Parties cannot agree, by an

arbitrator selected by the American Arbitration Association. This Proposal shall be governed and controlled in all respects by the laws of the State of Michigan, USA, and any arbitration shall resort only to the laws of the State of Michigan, USA. The Arbitrator shall give effect to statutes of limitation in determining any claim. Any controversy concerning whether an issue is subject to arbitration will be determined by the arbitrator. The arbitration shall be conducted in the County of Allegan, State of Michigan, USA. Any arbitration award may be entered in any Court having jurisdiction. Jurisdiction and venue of any proceeding to enter the arbitration award or to otherwise enforce the arbitration award shall lie in Allegan County, Michigan, USA, and shall be binding on the Purchaser/Customer no matter the location of the Purchaser/Customer.

Receipt of a purchase order relating in any way to this Proposal from the Purchaser/Customer is deemed the same as signing this Acceptance of Proposal, agreeing to all terms and limitations included herein.

Prepared By: Mr. Greg Slohoda

NOTE: This proposal is valid for Sixty (60) days.

Acceptance Of Proposal: - The above prices, specifications and conditions are satisfactory and are accepted. You are authorized to do the work as specified and payments will be made as outlined above.

Signature: _____ Date of Acceptance: _____

Print: _____ Title: _____

This proposal is not to be shared in whole or in part with third parties outside of Hazen and Sawyer, PC or the City of Tampa, FL without the express written consent of Prime Solution, Inc.

Thank you for your interest in Prime Solution and our Rotary Fan Press and we look forward to talking with you in the near future.

Regards,

Greg Slohoda

Greg Slohoda
Regional Sales Manager
Prime Solution, Inc.
PH: (269) 355-3616
greg@psirotary.com

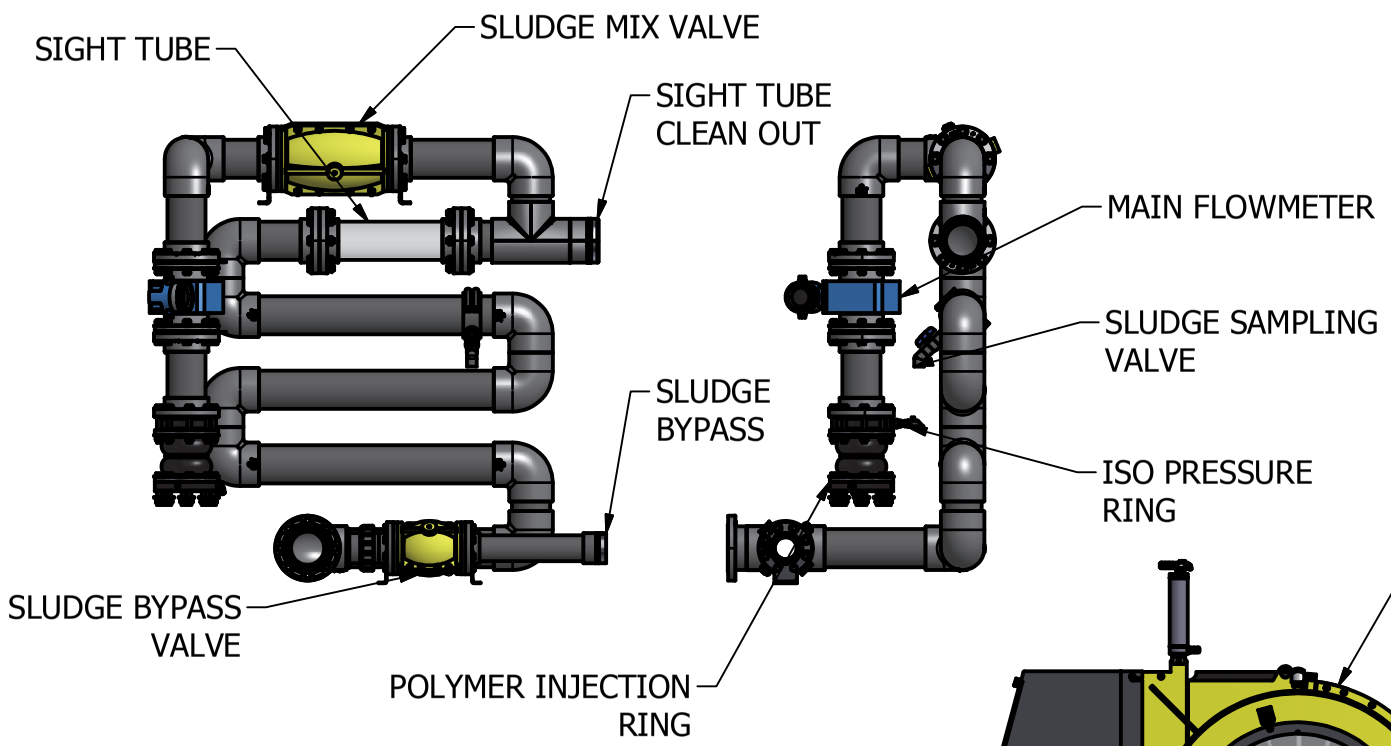

MAIN COMPONENTS			CONECTIONS		
ITEM	MAT'L	DESCRIPTION	ITEM	MAT'L	DESCRIPTION
1		ROTARY FAN PRESS	A		CAKE DISCHARGE CHUTE
2		MAIN FLOW METER	B		SLUDGE BYPASS 4" FNPT
3		SLUDGE RETENTION ASSY	C		SLUDGE INLET 6" FNPT
4		AIR REQUIRMENT 120 PSI	D		REUSE WATER 2" FNPT
5		SLUDGE SAMPLING VALVE	E		FRESH WATER 2" FNPT
6		CONTROL PANEL NEMA 4X	F		RFP MAIN POWER SUPPLY
7		SLUDGE PUMP ASSY	G		POLYMER FEED TUBE
8		POLYMER FEED/BLEND SYSTEM	H		FILTRATE DISCHARGE 4" FNPT
9		SIGHT TUBE CLEAN OUT	I		PRESS SKID
			J		UTILITY SKID

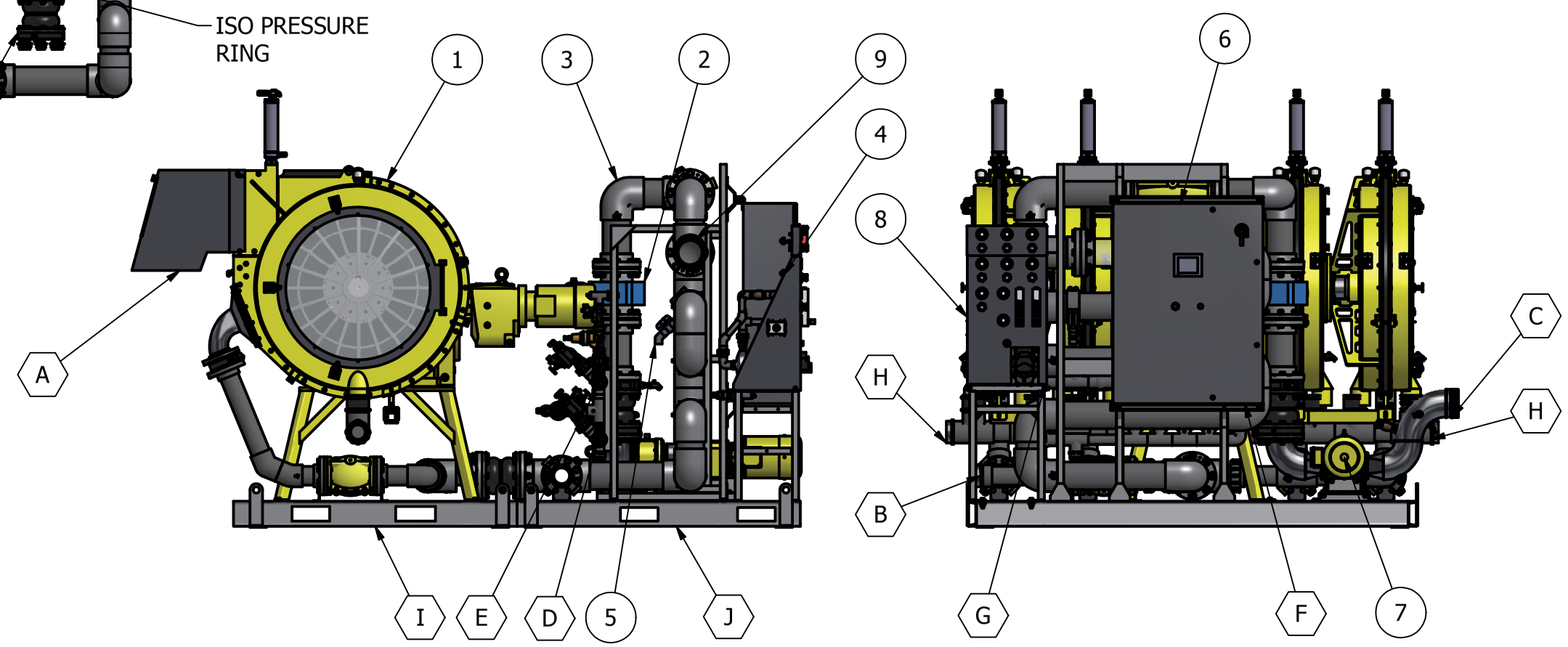

TYPICAL STANDARD SKID SYSTEM. ALL VALUES ARE REFERENCE ONLY UNTIL FINAL APROVAL

SPECIFICATIONS:

SUPPLY VOLTAGE: 208v 3 PHASE 60 HZ 80.05 FULL LOAD AMPS (16.10KW)
240v 3 PHASE 60 HZ 69.50 FULL LOAD AMPS (16.10KW)
480v 3 PHASE 60 HZ 34.75 FULL LOAD AMPS (16.10KW)

SUPPLY WATER: PRIME BLEND POLYMER SYSTEM
35 GPM AT 45 PSI (RECOMMEND FRESH WATER)

INTERMITTENT: INNER WASH 20 GPM @ 45 PSI PER CHANNEL (FILTRATE REUSE WATER ACCEPTABLE)
OUTER WASH 20 GPM @ 45 PSI PER CHANNEL (FILTRATE REUSE WATER ACCEPTABLE)

CONNECTIONS: SLUDGE FEED 6" FNPT SLUDGE BYPASS 4" FNPT
FILTRATE DISCHARGE 4" FNPT SUPPLY WATER 2" FNPT

DRAWN J. HILESKI	10/22/2012	
CHECKED		

PRIME
Dewatering Performance - Simplified
610 S. PLATT ST., OTSEGO, MI 49078
T:(269) 694-6666 F:(269) 694-1298

The attached documents include information of a proprietary and confidential nature. Recipient of the attached documents agrees that such documents are proprietary and confidential to Prime Solution Inc. and recipient may not disclose such documents or the information contained therein without the express authority of Prime Solution Inc.

TITLE

48" QUAD ROTARY FAN PRESS SKID SYSTEM

SIZE	DWG NO	REV
B	RFP48Q-SKE	

SCALE NTS SHEET 1 OF 3

MAIN COMPONENTS			CONECTIONS		
ITEM	MAT'L	DESCRIPTION	ITEM	MAT'L	DESCRIPTION
1		ROTARY FAN PRESS	A		CAKE DISCHARGE CHUTE
2		MAIN FLOW METER	B		SLUDGE BYPASS 4" FNPT
3		SLUDGE RETENTION ASSY	C		SLUDGE INLET 4" #150 FLANGE
4		AIR COMPRESSOR	D		REUSE WATER 2" FNPT
5		SLUDGE SAMPLING VALVE	E		FRESH WATER 2" FNPT
6		CONTROL PANEL NEMA 4X	F		RFP MAIN POWER SUPPLY
7		SLUDGE PUMP ASSY	G		POLYMER FEED TUBE
8		POLYMER FEED/BLEND SYSTEM	H		FILTRATE DISCHARGE 4" FNPT
9		SIGHT TUBE CLEAN OUT	I		PRESS SKID
			J		UTILITY SKID

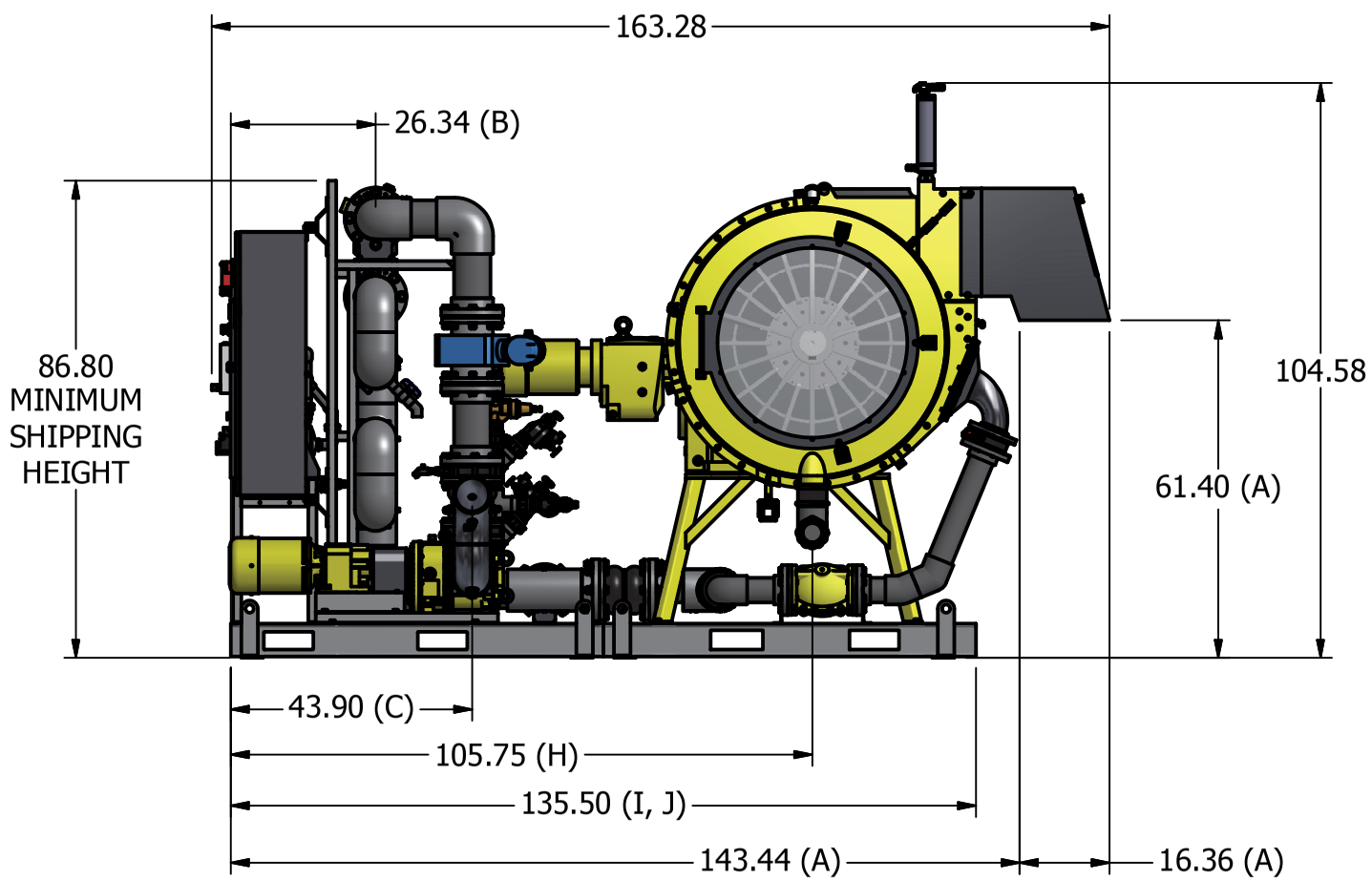

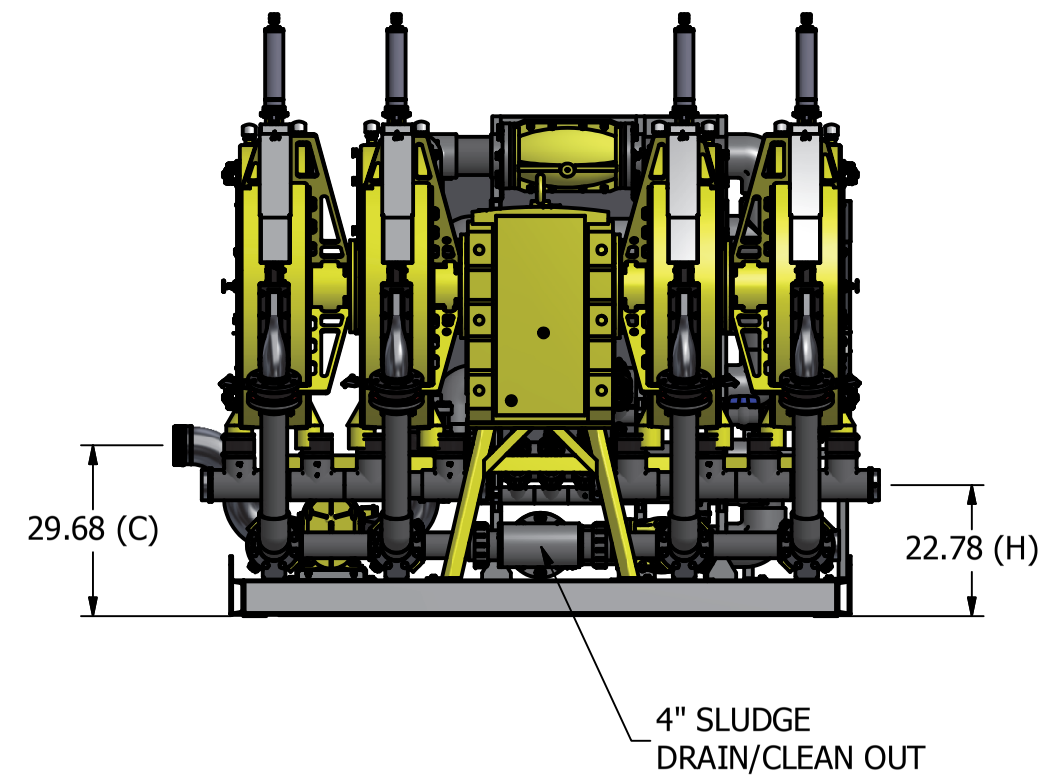

TYPICAL STANDARD SKID SYSTEM. ALL VALUES ARE REFERENCE ONLY UNTIL FINAL APROVAL

SPECIFICATIONS:

SUPPLY VOLTAGE: 208v 3 PHASE 60 HZ 80.05 FULL LOAD AMPS (16.10KW)
240v 3 PHASE 60 HZ 69.50 FULL LOAD AMPS (16.10KW)
480v 3 PHASE 60 HZ 34.75 FULL LOAD AMPS (16.10KW)

SUPPLY WATER: PRIME BLEND POLYMER SYSTEM
35 GPM AT 45 PSI (RECOMMEND FRESH WATER)

INTERMITTENT: INNER WASH 20 GPM @ 45 PSI PER CHANNEL (FILTRATE REUSE WATER ACCEPTABLE)
OUTER WASH 20 GPM @ 45 PSI PER CHANNEL (FILTRATE REUSE WATER ACCEPTABLE)

CONNECTIONS: SLUDGE FEED 6" FNPT SLUDGE BYPASS 4" FNPT
FILTRATE DISCHARGE 4" FNPT SUPPLY WATER 2" FNPT

DRAWN J. HILESKI	11/20/2012
CHECKED	

PRIME
Dewatering Performance - Simplified
610 S. PLATT ST., OTSEGO, MI 49078
T:(269) 694-6666 F:(269) 694-1298

The attached documents include information of a proprietary and confidential nature. Recipient of the attached documents agrees that such documents are proprietary and confidential to Prime Solution Inc. and recipient may not disclose such documents or the information contained therein without the express authority of Prime Solution Inc.

TITLE

48" QUAD ROTARY FAN PRESS SKID SYSTEM

SIZE	DWG NO	REV
B	RFP48Q-SKE	

SCALE NTS SHEET 2 OF 3

MAIN COMPONENTS			CONECTIONS		
ITEM	MAT'L	DESCRIPTION	ITEM	MAT'L	DESCRIPTION
1		ROTARY FAN PRESS	A		CAKE DISCHARGE CHUTE
2		MAIN FLOW METER	B		SLUDGE BYPASS 4" FNPT
3		SLUDGE RETENTION ASSY	C		SLUDGE INLET 4" #150 FLANGE
4		AIR COMPRESSOR	D		REUSE WATER 2" FNPT
5		SLUDGE SAMPLING VALVE	E		FRESH WATER 2" FNPT
6		CONTROL PANEL NEMA 4X	F		RFP MAIN POWER SUPPLY
7		SLUDGE PUMP ASSY	G		POLYMER FEED TUBE
8		POLYMER FEED/BLEND SYSTEM	H		FILTRATE DISCHARGE 4" FNPT
9		SIGHT TUBE CLEAN OUT	I		PRESS SKID
			J		UTILITY SKID

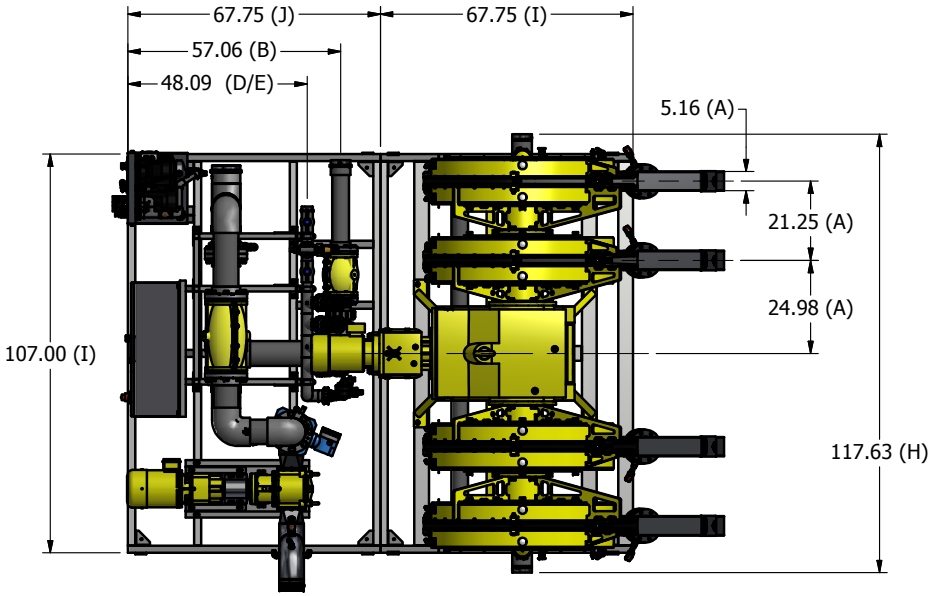

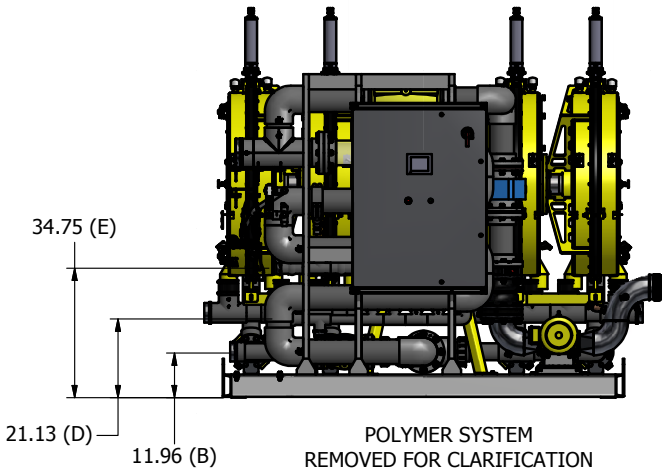

POLYMER SYSTEM
REMOVED FOR CLARIFICATION

TYPICAL STANDARD SKID SYSTEM. ALL VALUES ARE REFERENCE ONLY UNTIL FINAL APROVAL

SPECIFICATIONS:

SUPPLY VOLTAGE: 208v 3 PHASE 60 HZ 80.05 FULL LOAD AMPS (16.10KW)
240v 3 PHASE 60 HZ 69.50 FULL LOAD AMPS (16.10KW)
480v 3 PHASE 60 HZ 34.75 FULL LOAD AMPS (16.10KW)

SUPPLY WATER: PRIME BLEND POLYMER SYSTEM
35 GPM AT 45 PSI (RECOMMEND FRESH WATER)

INTERMITTENT: INNER WASH 20 GPM @ 45 PSI PER CHANNEL (FILTRATE REUSE WATER ACCEPTABLE)
OUTER WASH 20 GPM @ 45 PSI PER CHANNEL (FILTRATE REUSE WATER ACCEPTABLE)

CONNECTIONS: SLUDGE FEED 6" FNPT SLUDGE BYPASS 4" FNPT
FILTRATE DISCHARGE 4" FNPT SUPPLY WATER 2" FNPT

DRAWN J. HILESKI	11/20/2012	The attached documents include information of a proprietary and confidential nature. Recipient of the attached documents agrees that such documents are proprietary and confidential to Prime Solution Inc. and recipient may not disclose such documents or the information contained therein without the express authority of Prime Solution Inc.
CHECKED		TITLE 48" QUAD ROTARY FAN PRESS SKID SYSTEM

PRIME
Dewatering Performance - Simplified
610 S. PLATT ST., OTSEGO, MI 49078
T:(269) 694-6666 F:(269) 694-1298

SIZE	DWG NO	REV
B	RFP48Q-SKE	

SCALE NTS SHEET 3 OF 3

APPENDIX D
OPINION OF CAPITAL AND CONSTRUCTION COSTS

HAZEN AND SAWYER
Environmental Engineers & Scientists

Cost Estimate for New Belt Filter Press Dewatering to Land Application Disposal

ITEM NO.	DESCRIPTION	QUANTITY	UNIT	UNIT PRICE	FACTOR	TOTAL
General/Civil						
C1	Site Work	1	LS	$0	1.00	$0
Structural						
S1	Building Improvements/Maintenance	1	LS	$700,000	1.00	$700,000
S2	Bridge Crane	0	EA	$40,000	1.25	$0
Mechanical						
M1	Belt Filter Press (2 duty, 2 future*, 1 backup)	5	EA	$475,000	1.25	$2,968,750
M2	Grinders	4	EA	$20,000	1.00	$80,000
M3	Feed Pump	5	EA	$20,000	1.00	$100,000
M4	Conveyors	1	LS	$1,200,000	1.00	$1,200,000
M5	Replace boost water pumps	2	EA	$20,000	1.00	$40,000
M6	Piping	1	LS	$0	1.00	$0
Polymer System						
M7	Bulk Tanks	2	EA	$5,000	1.00	$10,000
M8	Polymer Activation Units and Pumps	5	EA	$20,000	1.00	$100,000
M9	Aging Tanks	2	EA	$5,000	1.00	$10,000
M10	Polymer Transfer Pumps	5	EA	$2,000	1.00	$10,000
Electrical						
E1	Electrical	1	LS	$300,000	1.00	$300,000
Instrumentation						
I1	Instrumentation	1	LS	$400,000	1.00	$400,000
				SUBTOTAL		$5,918,750
				20 % Overhead, Profit, General Conditions		$1,183,750
				30% Management and Engineering		$2,130,750
				30% Contingency		$1,775,625
				PROJECT TOTAL		**$11,000,000**

This cost estimate includes replacing five belt filter presses, the belt conveyors with screw conveyors, five feed pumps, and the polymer system in the existing dewatering building. The building will also require improvements to the metal framing, piping, etc. as noted in the BPAR.

* Future meaning to meet plant capacity sludge production

Cost Estimate for Screw Press Dewatering to Land Application Disposal

ITEM NO.	DESCRIPTION	QUANTITY	UNIT	UNIT PRICE	FACTOR	TOTAL
General/Civil						
C1	Site Work	1	LS	$20,000	1.00	$20,000
Structural						
S1	Building (200' x 60')	12,000	SF	$200	1.00	$2,400,000
S2	Bridge Crane	1	EA	$40,000	1.25	$50,000
S3	Existing Dewatering Building Maintenance	0	LS	$400,000	1.00	$0
Mechanical						
M1	Screw Press (4 duty, 4 future*, 1 backup)	9	EA	$300,000	1.25	$3,375,000
M2	Feed Pump	9	EA	$20,000	1.00	$180,000
M3	Conveyors	1	LS	$180,000	1.00	$180,000
M4	Piping	1	LS	$100,000	1.00	$100,000
Polymer System						
M5	Bulk Tanks	2	EA	$5,000	1.00	$10,000
M6	Polymer Activation Units and Pumps	9	EA	$20,000	1.00	$180,000
M7	Aging Tanks	2	EA	$5,000	1.00	$10,000
M8	Polymer Transfer Pumps	9	EA	$2,000	1.00	$18,000
Electrical						
E1	Electrical	1	LS	$300,000	1.00	$300,000
Instrumentation						
I1	Instrumentation	1	LS	$400,000	1.00	$400,000
				SUBTOTAL		$7,223,000
				20 % Overhead, Profit, General Conditions		$1,444,600
				30% Management and Engineering		$2,600,280
				30% Contingency		$2,166,900
				PROJECT TOTAL		**$13,400,000**

This cost estimate includes a new elevated screw press building over a truck loading station. The building will consist of metal framing, roof, partial sidewalls, platforms for operations and maintenance, bridge crane, and truck loading conveyors to distribute dewatered cake uniformly in each truck. Feed pumps, grinders, and polymer components will be located an open space within the new building.

* Future meaning to meet plant capacity sludge production

Cost Estimate for Centrifuge Dewatering to Land Application Disposal

ITEM NO.	DESCRIPTION	QUANTITY	UNIT	UNIT PRICE	FACTOR	TOTAL
General/Civil						
C1	Site Work	1	LS	$20,000	1.00	$20,000
Structural						
S1	Building (120' x 60')	7,200	SF	$200	1.00	$1,440,000
S2	Bridge Crane	1	EA	$40,000	1.25	$50,000
S3	Existing Dewatering Building Maintenance	0	LS	$400,000	1.00	$0
Mechanical						
M1	Centrifuge (2 duty, 2 future*, 1 backup)	5	EA	$588,000	1.25	$3,675,000
M2	Grinders	4	EA	$20,000	1.00	$80,000
M3	Feed Pump	5	EA	$20,000	1.00	$100,000
M4	Conveyors	1	LS	$100,000	1.00	$100,000
M5	Piping	1	LS	$100,000	1.00	$100,000
Polymer System						
M6	Bulk Tanks	2	EA	$5,000	1.00	$10,000
M7	Polymer Activation Units and Pumps	5	EA	$20,000	1.00	$100,000
M8	Aging Tanks	2	EA	$5,000	1.00	$10,000
M9	Polymer Transfer Pumps	5	EA	$2,000	1.00	$10,000
Electrical						
E1	Electrical	1	LS	$300,000	1.00	$300,000
Instrumentation						
I1	Instrumentation	1	LS	$400,000	1.00	$400,000
				SUBTOTAL		$6,395,000
				20 % Overhead, Profit, General Conditions		$1,279,000
				30% Management and Engineering		$2,302,200
				30% Contingency		$1,918,500
				PROJECT TOTAL		**$11,900,000**

This cost estimate includes a new elevated centrifuge building over a truck loading station. The building will consist of metal framing, roof, partial sidewalls, platforms for operations and maintenance, bridge crane, and truck loading conveyors to distribute dewatered cake uniformly in each truck. Feed pumps, grinders, and polymer components will be located an open space within the new building.

* Future meaning to meet plant capacity sludge production

Cost Estimate for Rotary Fan Press Dewatering to Land Application Disposal

ITEM NO.	DESCRIPTION	QUANTITY	UNIT	UNIT PRICE	FACTOR	TOTAL
General/Civil						
C1	Site Work	1	LS	$20,000	1.00	$20,000
Structural						
S1	Building (160' x 60')	9,600	SF	$200	1.00	$1,920,000
S2	Bridge Crane	1	EA	$40,000	1.25	$50,000
S3	Existing Dewatering Building Maintenance	0	LS	$400,000	1.00	$0
Mechanical						
M1	Fan Press (3 duty, 3 future*, 1 backup)	7	EA	$590,000	1.25	$5,162,500
M2	Grinders	4	EA	$20,000	1.00	$80,000
M3	Feed Pump	7	EA	$20,000	1.00	$140,000
M4	Conveyors	1	LS	$140,000	1.00	$140,000
M5	Piping	1	LS	$100,000	1.00	$100,000
Polymer System						
M6	Bulk Tanks	2	EA	$5,000	1.00	$10,000
M7	Polymer Activation Units and Pumps	7	EA	$20,000	1.00	$140,000
M8	Aging Tanks	2	EA	$5,000	1.00	$10,000
M9	Polymer Transfer Pumps	7	EA	$2,000	1.00	$14,000
Electrical						
E1	Electrical	1	LS	$300,000	1.00	$300,000
Instrumentation						
I1	Instrumentation	1	LS	$400,000	1.00	$400,000
				SUBTOTAL		$8,486,500
				20 % Overhead, Profit, General Conditions		$1,697,300
				30% Management and Engineering		$3,055,140
				30% Contingency		$2,545,950
				PROJECT TOTAL		**$15,800,000**

This cost estimate includes a new elevated rotary fan press building over a truck loading station. The building will consist of metal framing, roof, partial sidewalls, platforms for operations and maintenance, bridge crane, and truck loading conveyors to distribute dewatered cake uniformly in each truck. Feed pumps, grinders, and polymer components will be located an open space within the new building.

* Future meaning to meet plant capacity sludge production

APPENDIX E
PATHOGEN REACTIVATION AND REGROWTH REPORT

HAZEN AND SAWYER
Environmental Engineers & Scientists

Technical Summary Document

PREPARED BY: Matt Van Horne (Hazen and Sawyer)

REVIEWED BY: Michael Bullard (Hazen and Sawyer)

DATE: January 12, 2010

SUBJECT: State of Knowledge of Pathogen Reactivation and Regrowth

1.0 INTRODUCTION

Under some conditions, anaerobically digested and centrifuge dewatered biosolids have been shown to contain concentrations of indicator organisms (generally fecal coliforms and *E. coli*) that exceed the Class B standards of 2,000,000 Most Probable Number (or Colony Forming Units) per gram of total dry solids. The increase in pathogen density is divided into two components: "sudden increase" (also sometimes called "reactivation") and "regrowth". Sudden Increase (SI) refers to the increase in density immediately following the dewatering process and regrowth refers to the increase in density during cake storage. The SI component of the increase in indicator bacteria tended to take place more frequently at facilities with thermophilic digesters (127°F – 140°F) as compared to those with mesophilic digesters (86°F – 104°F) and only at those facilities that utilize centrifuge dewatering equipment.

2.0 SUDDEN INCREASE

As summarized in Higgins et al. (2008) five general theories have emerged to potentially explain the SI phenomenon:

1. Statistical variability in the sampling
2. False positives associated with enumeration techniques
3. Contamination from the centrifuge
4. Regrowth of bacteria after dewatering
5. Improved culturability after dewatering, possibly due to:
    a. Floc breakup due to shear
    b. Removal of growth inhibitors during dewatering
    c. Protozoan grazing
    d. Reactivation of non-culturable bacteria followed by regrowth

A review of the literature by Higgins et al. (2008) eliminated statistical variability and false positives as viable causes of SI. Centrifuge contamination is maintained as a possible cause,

and would need to be addressed on a site-by-site basis, but may be unlikely as a significant increase in indicator organism density was observed at lag times of less than one hour following centrifuge dewatering and again at approximately 4 hours (attributed to regrowth). If a bacterial population was growing in the centrifuge a steady population growth would be anticipated as opposed to the observed step increase at the longer lag time.

An additional possibility for contamination is the polymer addition. Higgins (2010) identified polymer make-up water, dilution water and carrier water as possible sources of contamination for the dewatering process. One facility in the United Kingdom used non-disinfected plant effluent as polymer make-up water and saw their SI measurements eliminated after a switch to potable water for polymer make-up. The facility still experienced a significant regrowth component despite this change. Polymer systems have been sampled at other facilities and been found to not be sources of contamination but the dewatered cake still showed significant SI. Site specific assessments are also required to identify if this is a possible contributing factor.

Regrowth of the bacteria during and immediately after centrifuge dewatering is also an unlikely candidate since the residence time in a centrifuge is typically on the order of 20 minutes. Under the most ideal conditions, *E. coli* will double in population every 20 minutes, however, analysis of cake samples show an actual *E. coli* doubling time on the order of 2-4 hours, reflecting the non-ideal conditions present in the cake. Therefore regrowth during and immediately following centrifuge dewatering is an unlikely explanation for the entire 1+ order of magnitude increase observed in bacterial populations.

The elimination or minimization of those four possible causes leaves <u>improved culturability</u> as the probable remaining cause for the SI phenomenon. Higgins et al. (2008) reviewed the four sources of improved culturability as follows:

- **Floc breakup** – This option was generally dismissed as a significant factor in the observed SI. The addition of polymer to the digested sludge has the effect of further aggregating the solids particles and flocs into larger agglomerations, able to retain the grouped characteristics despite the shear applied by the centrifuge. Particle size assessments of digested liquid sludge and dewatered cake support this assertion showing a transition to larger particles sizes for the dewatered cake as compared to the liquid digested sludge. This aggregation may also lend itself to underestimation of indicator organism densities in the cake due to the increased potential for inadequate homogenization of the cake sample, possibly resulting in the observed readings actually being lower than the actual densities. Additionally, DNA evaluations were performed as another means of measuring bacterial populations, including non culturable populations, and these showed that not all bacterial species increased in population following dewatering as would be expected if the floc breakup theory was correct.
- **Growth inhibitor removal** – The removal or modification of a growth inhibitor from the biosolids, either by centrate removal or modification from polymer addition, did not appear to be a significant factor as lab centrifuged solids that had the centrate added back in (theoretically returning the inhibitor to the cake) exhibited the same characteristics as the cake alone. There may be some specific sites where this could be

a portion of the cause, but would need to be assessed on a site-by-site basis. One such assessment was performed by Gardner and Omeci (2008) and is discussed in the following section. The Gardner and Omeci study also identified potential limitations in the potential comparison of lab centrifugation processes and full scale equipment, possibly rejuvenating this option as a possible explanation.

- **Protozoan grazing** – Bacteria could be ingested by protozoa during the anaerobic digestion process and later released by the protozoa, while still remaining viable, from the shear effects of the centrifuge process. This might explain some non-culturability of the bacteria in the liquid phase and some observed SI effects. To date, this has not yet been studied in detail and more research is needed on this topic.
- **Reactivation of non-culturable bacteria** – The concept of non-culturable bacteria is not a new concept and variations on this state are possible, however both the sub-lethal injury and viable but not culturable (VBNC) mechanisms are manifested similarly so distinguishing the two is not critical to understanding the SI process. A quantitative polymerase chain reaction (qPCR) DNA quantification compared to standard culturing method (SCM) quantification would yield the following results if this pathway was the primary culprit of the SI phenomenon:

    1. qPCR results would be greater than the SCM results for the liquid digested sludge
    2. qPCR results should not change significantly through the dewatering process
    3. qPCR results and SCM results would be in agreement in the dewatered cake

    Based on experiments by Higgins et al. (2008) it was found that approximately 80% of the reactivation potential (defined as the difference between the qPCR and SCM results prior to dewatering; the quantity of non-culturable bacteria) was realized following dewatering. This also allows for the possibility that a portion of the bacteria in the digested sludge, 20% in this case, are non-viable or irreversibly non-culturable. The drawback to the qPCR method is its inability to distinguish between “live” and “dead” cells. These results appear to provide evidence that reactivation is a key component of SI however the method by which the reactivation occurs is still not understood.

3.0 REGROWTH

Distinguishable from SI, regrowth is observed after a longer time period following dewatering. Regrowth is generally attributed to the availability of substrates and ideal growing conditions for organisms in the dewatered cake (Higgins 2010). Regrowth has been found to be relatively independent of reactivation but tends to be a function of the total solids concentration in the cake. This increase in solids concentration as a result of centrifuge dewatering is greater than that resulting from belt filter press dewatering, lending more credence to the observed differences between the two processes. According to Qi (2008), higher solids concentrations generally will reduce the activity of methanogenic bacteria (relative to the activity of coliform bacteria), like those found in large populations in anaerobic digesters. The difference in activity level is possibly the result of the coliform bacteria’s decreased sensitivity to available free water.

As the activity level of these bacteria are reduced, their substrate usage levels would also be reduced, resulting in less competition for available substrate with indicator organisms such as fecal coliforms and *E. coli*. As these indicator organisms utilize a larger portion of the substrate, they will experience population increases, possibly accounting for the regrowth observed in centrifuge dewatered biosolids.

Chapman and Krugel (2008) theorized that the specific composition of the methanogenic population in an anaerobic digester may play a role in the level of activity of competing organisms in the dewatered cake. There are approximately 18 identified methanogenic bacteria genera, of which two are generally identified as the primary acetate-utilizers (converting aceteate to methane and carbon dioxide) in anaerobic digestion, *Methanosaeta* and *Methanosarcina*. This pathway for methane production is thought to produce approximately 70% of the methane produced in anaerobic digestion, with the remaining 30% produced by combining hydrogen and carbon dioxide. In addition to aceteate conversion, these genera also have the ability to metabolize volatile organic sulfur compounds (VOSCs; such as methanethiol, dimethyl sulfide and dimethyl disulfide), generally identified as major odor sources in dewatered biosolids, to less offensive metabolites.

Methanosaeta and *Methanosarcina* each have different shapes and cell wall compositions which impact their durability when exposed to physical disruptions that may cause cell lysing, such as extreme shear as found in centrifuge dewatering. The rod shaped fibrous cells of *Methanosaeta* are thought to be less able to survive the shear forces of the centrifuge process than the coccoidal shaped *Methanosarcina* that also have thick and rigid outer cell envelopes. Determining the dominant acetate-using genera in a given digested sludge sample can be achieved by observing the acetate concentrations in the digester. For concentrations below 200 mg/L (low organic loading), *Methanosaeta* appear to be the dominant species while *Methanosarcina* would dominate at concentrations exceeding 200 mg/L (high organic loading). Typical mesophilic digesters operate below the 200 mg/L threshold, leading to the assumption that *Methanosaeta* would dominate, while thermophilic digesters typically exceed that concentration, leading to the assumption that *Methanosarcina* would dominate. Acetate concentrations in an anaerobic digester vary with the organic loading, and as the HRT of a digester decreases (organic loadings increase) the acetate concentration would increase, presumably resulting in an increase in *Methanosarcina* populations. Conversely, higher digester HRTs would tend to select more for *Methanosaeta* as the organic loading and acetate concentration would drop.

Consolidating the observations of Chapman and Krugel (2008), it would seem to indicate that thermophilic anaerobic digesters with shorter HRTs would have higher organic loadings and therefore higher *Methanosarcina* populations, which are more resistant to lysing from the shear forces in centrifuges, and therefore would have provide more competition for organic substrates in the dewatered cake, thereby decreasing the regrowth potential of the cake sample. Conversely, lower organic loadings would have higher *Methanosaeta* populations and higher regrowth potential, which generally follows observed regrowth in thermophilic digesters but does not address mesophilic digesters where *Methanosaeta* is projected to dominate but regrowth is not as significant of an issue.

The data collected by Higgins et al. (2008) somewhat supports this conclusion as thermophilic anaerobic digesters with HRTs ranging from 15-24 days (generally long compared to a typical 12-14 day HRT) experienced fecal coliform regrowth. However, no data was provided to analyze the regrowth impacts from shorter HRT installations. Table 1 summarizes the connection between organic loading, methanogen genera and regrowth potential in dewatered cake based on the observations made by Chapman and Krugel (2008).

Table 1: Methanogen Genera Impact on Regrowth

Criteria	Comparative Analysis	
Hydraulic Residence Time	Short	Long
Organic Loading	High	Low
Acetate Concentration	High	Low
Dominant Methanogen Genera	*Methanosarcina*	*Methanosaeta*
Durability of Bacterial Cell	High	Low
Viable Population in Dewatered Cake	High	Low
Level of Substrate Utilization Competition	High	Low
Regrowth and Odor Generation Potential	**Lower**	**Higher**

Another theory for the base cause of regrowth was put forth by Gardner and Ormeci (2008) focusing on the role of the centrate in the regrowth phenomenon. They hypothesized that the centrifuge action removed a growth inhibitor from the digested sludge that would allow fecal coliforms and other bacteria species to grow. This study utilized an adenosine triphosphate (ATP) measurement to provide an assessment of the total number of bacteria in a sample. This measurement can also distinguish between “live” ATP and “dead” ATP to account for the ATP found in the sludge following cell lysing. Comparing these results to fecal coliform culturing methods allows the comparison of total bacterial counts to culturable fecal coliform counts. The study only assessed two facilities so the large scale applicability of the results may be limited however some significant insight into analysis methodology and bacterial activity was generated.

The main conclusion from this study was that for the one of the two facilities analyzed, the centrate appeared to have an inhibiting effect on bacterial growth. The removal of the centrate from the digested sludge enabled regrowth of all types of sludge bacteria, including fecal coliforms, to some extent. Based on chemical analysis of the centrate, sulphide was identified as a possible inhibitory compound. Removal of the centrate showed increases in regrowth of all types of bacteria although on varying time scales. Fecal coliforms tended to increase in population and peak after approximately 8-10 days of storage. Following that point, the concentrations tended to return to levels approximately equivalent to, or less than the initial concentrations. Total bacterial concentrations tended to show a steep reduction over the first 8-10 days then a gradual increase as time continues. These variations in behavior cast some doubt on the suitability of fecal coliforms to serve as an accurate indicator species for the overall bacterial activity of biosolids.

The final conclusion that was reached was the difference in cake and centrate characteristics between full scale centrifuges and lab scale centrifuges. The observations that were made using samples from an operating wastewater treatment facility were not able to be reproduced using lab scale equipment. The main location this difference was observed was in the toxicity of the centrate. The lab scale centrate was found to be less toxic than its full scale counterpart, possibly a result of the differences in applied shear between the two sets of equipment, which may also explain the tendency of the regrowth phenomenon to occur with high-solids centrifuges as opposed to low-solids centrifuges.

4.0 MANAGEMENT ALTERNATIVES

In general there are two classifications of solutions to the SI/regrowth issues: systematic and chemical.

Systematic solutions would require changes in plant operations or processes to utilize a different process to treat the biosolids. Multiple sources have identified high solids centrifuges as a main culprit for initiating SI and regrowth, so one alternative would be to use a belt filter press instead to reduce the SI/regrowth potential. Several other sources have identified multi-stage thermophilic anaerobic digestion as having the ability to reduce regrowth potential regardless of the dewatering process used. Alternatively, mesophilic anaerobic digestion has not typically been observed to result in SI/regrowth issues, however this type of sludge stabilization would require additional processes beyond digestion and dewatering to meet Class A biosolids standards.

High levels of shear from centrifuges, as summarized previously, have been identified as a significant physical pathway resulting in SI and regrowth. Another location where shear is imparted to the dewatered cake is in screw conveyors. According to Erdal et al. (2003), in addition to the shear impacts (which are still not fully understood as to their exact mechanism for promoting the pathogen regrowth), screw conveyors also promote certain conditions that may also play a role in regrowth and odor generation:

- Improved binding action of polymers
- Provide a homogeneously mixed environment with a consistent substrate concentration throughout the cake that allows for better dispersion of bacterial populations throughout the cake
- Changes the physical characteristics of the cake into a very viscous paste that reduces the ability of air to penetrate the cake and correspondingly can enhance growth rates of certain bacteria, including fecal coliforms

One option for mitigating additional shear and the other complications of screw conveyors would be to use belt conveyors or other low shear sludge conveyance methods.

The temperature drop in the biosolids following a thermophilic process has also been thought to be a cause of observed SI and regrowth (Iranpour et al., 2003). To mitigate this at the Hyperion Treatment Plant in Los Angeles, the biosolids handling equipment and piping were insulated to maintain temperatures through the on-site storage facilities. The effectiveness of this

improvement alone was difficult to assess as it occurred at the same time as plant modifications to implement two-stage thermophilic digestion, and the combination of these two improvements resulted in no observed regrowth through the point of land application.

Chemical solutions were most thoroughly discussed by Erdal et al. (2003 and 2004) in the work done at the Charlotte-Mecklenburg Utilities McAlpine Creek Wastewater Treatment Plant. Testing was performed to determine the possible cause of observed odor generation and fecal regrowth. The release of proteins by high shear forces imparted on the sludge by the centrifuge and their subsequent use as a substrate for fecal regrowth were cited as the main reasons. To address these issues ferric chloride, sodium hypochlorite and liquid lime were tested and it was found that ferric chloride and sodium hypochlorite provided some level of protection against regrowth. The lime dosages tested resulted in significant odor generation despite its control of fecal regrowth. A brief summary of the pilot-scale results include:

- A 47% lime solution at dosing of 1% (by weight) or greater can control fecal regrowth to Class B standards, however at higher doses the resulting pH increase resulted in significant ammonia releases and odor generation
- A 33% ferric chloride solution at doses of 6.5% (by weight) can control fecal regrowth, however the odor control effectiveness of these doses decreased as the cake aged possibly due to the slow increase in pH from the initial dosing
- A 6.15% sodium hypochlorite solution at doses between 1% and 10% (by weight) showed good control of fecal regrowth in fresh cake samples, however the results after 10 days of storage of the treated cake were not conclusive

A combination of ferric chloride and sodium hypochlorite addition was identified in preliminary trials as a possible method to control both odors and regrowth in the dewatered cake. Overall, the liquid lime feed, at low to moderate dose rates, was identified as providing the best combination of odor and regrowth control (Erdal et al. 2003). This was further investigated by Erdal et al. (2004) for lime addition only and lime addition with ferric chloride for additional odor control. An optimum dose of 5% (by weight) of lime was identified to provide effective fecal regrowth control while maintaining the pH below 11 to avoid “alkaline stabilization” of the cake. Ferric chloride was also added for some of the tests at a dose of 2% (by weight). Both the lime and lime/ferric chemical treatment regimes provided regrowth and odor control through conveyance, storage and land application.

Hendrickson et al. (2004) found that a continuous feed of 15 ppm of sodium hypochlorite into the dewatered cake produced Class B compliant biosolids. This alternative would need to be monitored for the generation of objectionable byproducts from the use of the chlorine-based disinfectant.

5.0 IMPACT OF COLIFORM REACTIVATION AND REGROWTH ON PATHOGENS

As some of the previously cited studies have shown, there is some concern that fecal coliform and *E. Coli* may not provide the most accurate view of overall pathogenic activity in biosolids due to the differences in behavior and growth patterns. Higgins et al. (2008) performed sampling for *Salmonella* in the digested sludge and in the dewatered and stored cake for both Class A

and Class B facilities and also for mesophilic and thermophilic anaerobic digesters. For Class A processes the sampling found that *Salmonella* was not present in either the digested or dewatered biosolids and no evidence of SI or regrowth was observed for *Salmonella*. Some of the facilities sampled, however, did show evidence of indicator organism SI or regrowth. For the Class B processes, regrowth was observed in two mesophilic digester systems but not in the thermophilic digester system.

Overall this evidence supports the following conclusions:

- Thermophilic anaerobic digestion appears to effectively manage *Salmonella* pathogens without SI or regrowth
- The EPA time/temperature regulations appear to effectively manage *Salmonella* populations while indicator organisms may be in excess of numerical standards
- Class B biosolids may contain pathogens, as expected, and the public access restrictions and exposure limitations will provide the necessary public safety for land application disposal, not a limit on microbial densities
- Fecal coliforms and *E. coli* are generally conservative indicators of the pathogenic activity of biosolids

6.0 REFERENCES

Chapman, T. and Krugel, S. (2008) A Review, Clues and Hypothesis to Explain Regrowth Issues. Water Environment Foundation 22nd Annual Residuals and Biosolids Conference and Exhibition. Philadelphia, PA.

Erdal, Z.K., Mendenhall, T.C., Neely, S.K., Wagoner, D.L. and Quigley, C. (2003) Implementing Improvements in a North Carolina Residuals Management Program. WEF/AWWA/CWEA Joint Residuals and Biosolids Management Conference. Baltimore, MD.

Erdal, Z.K., Wagoner, D.L., Quigley, C., Mendenhall, T.C. and Neely, S.K. (2004) Maintaining Class B Biosolids Post-Dewatering Through Low-Level Lime Dosing. Water Environment Foundation WEFTEC 2004, New Orleans, LA.

Gardner, J. and Ormeci, B. (2008) Fate and Survival of Fecal Coliform Through Centrifuge Dewatering and Role of Centrate in Growth Inhibition. Water Environment Foundation 22nd Annual Residuals and Biosolids Conference and Exhibition. Philadelphia, PA.

Hendrickson, D.A., Denard, D., Farrell, J., Higgins, M. and Murthy, S. (2004) Reactivation of Fecal Coliforms after Anaerobic Digestion and Dewatering. Water Environment Foundation 18th Annual Residuals and Biosolids Conference and Exhibition. Salt Lake City, UT.

Higgins, M.J., Chen Y-C., Hendricksen, D., and Murthy, S.N. (2008) Evaluation of Bacterial Pathogen and Indicator Densities After Dewatering of Anaerobically Digested Biosolids Phase II

and III – Final Report. Water Environment Research Foundation Report No 04-CTS-3T, Alexandria, VA.

Higgins, M.J. (2010) What Do We Know About Sudden Increase and Regrowth? Water Environment Federation WEFTEC 2010 *Improving Out Understanding and Management of Biosolids Regrowth, Odors and Sudden Increases (ROSI) in Indicator Organisms* Workshop, New Orleans, LA.

Iranpour, R., Cox, H.H.J., Hernandez, G., Redd, K., Fan, S., Moghaddam, O., Abkian, V., Mundine, J., Haug, R.T., and Kearney, R.J. (2003) Production of EQ Biosolids at Hyperion Treatment Plant: Problems and Solutions for Reactivation/Growth of Fecal Coliforms. Water Environment Foundation WEFTEC 2003, Los Angeles, CA.

Qi, Y., Dentel, S.K. and Herson, D.S. (2008) Effect of Dewatering on Fecal Coliforms and Methanogens in Anaerobically Digested Biosolids. Water Environment Foundation 22nd Annual Residuals and Biosolids Conference and Exhibition. Philadelphia, PA.