LOCATION MAP

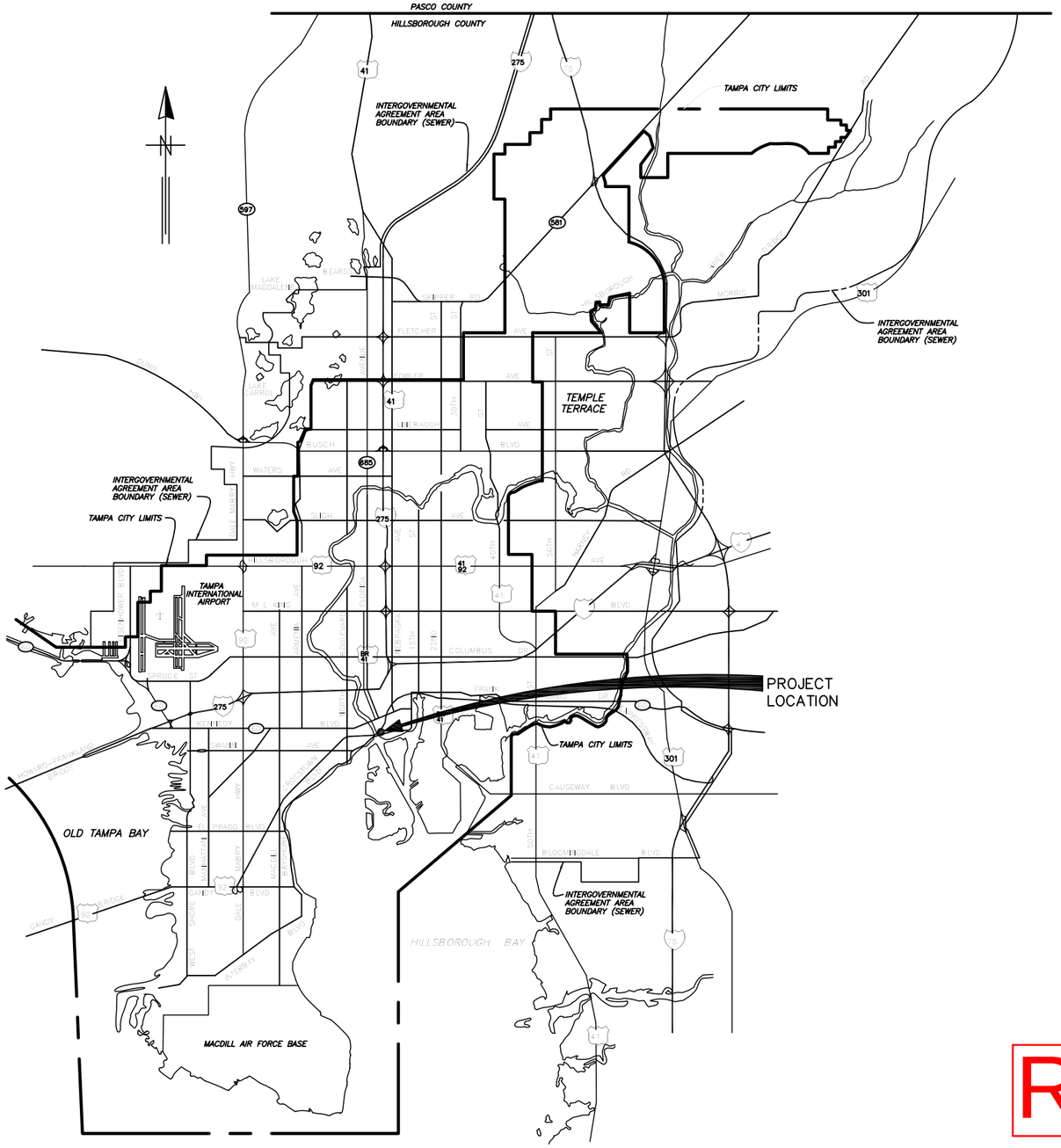

CITY of TAMPA

WASTEWATER DEPARTMENT

PLANS FOR

KRAUSE PS REHABILITATION

CONTRACT NUMBER 14-C-00009

MAY 1, 2014

CONFORMED 1/27/15

RED LINES

EDT

GREELEY AND HANSEN

billerreinhart STRUCTURAL GROUP INC.

GLOBAL SANCHEZ, INC. GLOBAL-SANCHEZ.COM
BUILDING SYSTEMS ENGINEERING
3825 HENDERSON BOULEVARD, SUITE 103
Tampa, FL 33629

B080-001

LOCATION MAP

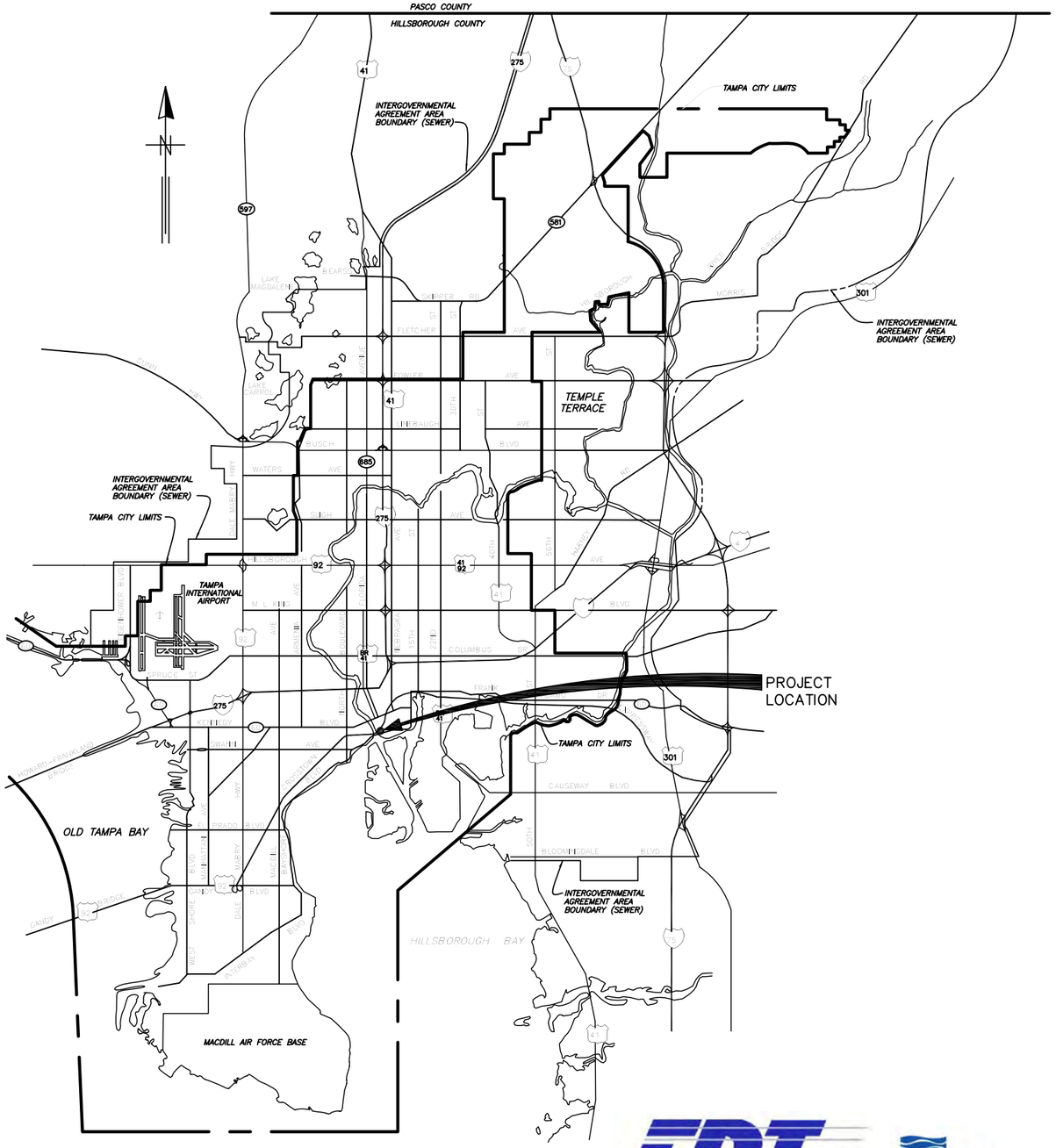

CITY of TAMPA

WASTEWATER DEPARTMENT

PLANS FOR

KRAUSE PS REHABILITATION

CONTRACT NUMBER 14-C-00009

RED LINES

ENGINEER OF RECORD:
BOB E. HALLMAN, P.E.
FLORIDA REGISTRATION NO. 20761

EDT | GREELEY AND HANSEN | billerreinhart STRUCTURAL GROUP INC. | GLOBAL SANCHEZ, INC. BUILDING SYSTEMS ENGINEERING 3825 HENDERSON BOULEVARD, SUITE 103 Tampa, FL 33629

Engineering Design Technologies Corp.
P.O. Box 152403
Tampa, FL 33684-2403
813.289.8080
813.282.9184 FAX
engineering@edt1.com
Certificate of Authorization Number: 4795

CITY of TAMPA
WASTEWATER DEPARTMENT

KRAUSE PS REHABILITATION

COVER SHEET

NO.	DATE	REVISIONS
1	1/27/15	CONFORMED

DRAWN: RWB
DESIGN: STK
QC: BEH
DATE: 05/01/14

COVER

B080-002

DRAWING INDEX

CIVIL DRAWINGS

G-1 GENERAL NOTES
G-2 MECHANICAL SITE PLAN
G-3 MECHANICAL YARD PIPING
G-4 METER REPLACEMENT
G-5 BYPASS DETAILS
G-6 TEMPORARY BYPASS-CONCEPTUAL PLAN
G-7 STANDARD DETAILS
G-8 CONCEPTUAL MAINTENANCE OF TRAFFIC
G-9 BYPASS AND MISCELLANEOUS DETAILS

MECHANICAL DEMOLITION DRAWINGS

D-1 LOWER LEVEL MECHANICAL DEMOLITION PLAN
D-2 UPPER LEVEL MECHANICAL DEMOLITION PLAN
D-3 MECHANICAL DEMOLITION SECTIONS
D-4 WATER, AIR AND PRIMING SYSTEM DIAGRAMS

MECHANICAL DRAWINGS

M-1 LOWER LEVEL PLAN
M-2 UPPER LEVEL PLAN
M-3 SECTIONS AND DETAILS
M-4 NEW AIR PIPING DIAGRAMS AND NEW SUCTION TUBE DETAILS
M-5 AIR VACUUM PRIMING SYSTEM AND SUMP PUMP DIAGRAMS
M-6 UPPER LEVEL PLAN
M-7 SCREEN AREA SECTIONS AND DETAILS FOR DEBRIS REMOVAL EQUIPMENT
M-8 WET WELL LEVELS

STRUCTURAL DRAWINGS

S-1 GENERAL STRUCTURAL NOTES
S-2 GENERAL STRUCTURAL NOTES
S-3 GENERAL STRUCTURAL NOTES
S-4 GENERAL STRUCTURAL NOTES
S-5 EXISTING PLANS WITH NEW STRUCTURAL MODIFICATION & ADDITIONS
S-6 EXISTING PLANS WITH NEW STRUCTURAL MODIFICATION & ADDITIONS
S-7 EXISTING PLANS WITH NEW STRUCTURAL MODIFICATION & ADDITIONS
S-8 EXISTING PLANS WITH NEW STRUCTURAL MODIFICATION & ADDITIONS
S-9 EXISTING PLANS WITH NEW STRUCTURAL MODIFICATION & ADDITIONS
S-10 TRANSFORMER FOUNDATION PLAN
S-11 TRANSFORMER PLATFORM PLAN
S-12 SECTIONS & DETAILS
S-13 SECTIONS & DETAILS
S-14 SECTIONS & DETAILS
S-15 SECTIONS & DETAILS
S-16 SECTIONS & DETAILS
S-17 SECTIONS & DETAILS
S-18 SECTIONS & DETAILS
S-19 SECTIONS & DETAILS
S-20 SECTIONS & DETAILS
S-21 SECTIONS & DETAILS
S-22 SECTIONS & DETAILS
S-23 SECTIONS & DETAILS
S-24 SECTIONS & DETAILS
S-25 STRUCTURAL DETAIL
S-26 STRUCTURAL DETAIL
S-27 STRUCTURAL DETAIL
S-28 ELEVATION
S-29 PLAN
S-30 SECTION
S-31 PLAN
S-32 SECTIONS & DETAILS
S-33 SECTIONS & DETAILS
S-34 SECTIONS AND DETAILS
S-35 SECTIONS & DETAILS
S-36 HOIST BEAM PLAN
S-37 SECTIONS AND DETAILS

ELECTRICAL/INSTRUMENTATION DRAWINGS

E-1 ELECTRICAL LEGEND & ABBREVIATIONS
E-2 ELECTRICAL GENERAL NOTES
E-3 ELECTRICAL DEMOLITION PLAN (UPPER LEVEL) (SHEET 1 OF 2)
E-4 ELECTRICAL DEMOLITION PLAN (UPPER LEVEL) (SHEET 2 OF 2)
E-5 ELECTRICAL DEMOLITION PLAN (LOWER LEVEL)
E-6 ELECTRICAL EQUIPMENT LAYOUT (UPPER LEVEL – FLOOR ELEV. 7.54' NAVD) (SHEET 1 OF 2)
E-7 ELECTRICAL EQUIPMENT LAYOUT (UPPER LEVEL – FLOOR ELEV. 7.54' NAVD) (SHEET 2 OF 2)
E-8 ELECTRICAL EQUIPMENT LAYOUT (LOWER LEVEL – FLOOR ELEV. –5.99' NAVD)
E-9 CONDUIT ROUTING PLAN – POWER (UPPER LEVEL – FLOOR ELEV. 7.54' NAVD) (SHEET 1 OF 2)
E-10 CONDUIT ROUTING PLAN – POWER (UPPER LEVEL – FLOOR ELEV. 7.54' NAVD) (SHEET 2 OF 2)
E-11 CONDUIT ROUTING PLAN – POWER (LOWER LEVEL – FLOOR ELEV. –5.99' NAVD)
E-12 CONDUIT ROUTING PLAN – CONTROLS (UPPER LEVEL – FLOOR ELEV. 7.54' NAVD) (SHEET 1 OF 2)
E-13 CONDUIT ROUTING PLAN – CONTROLS (UPPER LEVEL – FLOOR ELEV. 7.54' NAVD) (SHEET 2 OF 2)
E-14 CONDUIT ROUTING PLAN – CONTROLS (LOWER LEVEL – FLOOR ELEV. –5.99' NAVD)
E-15 SWITCHBOARD-KPS ELECTRICAL ONE-LINE DIAGRAM (SHEET 1 OF 2)
E-16 SWITCHBOARD-KPS ELECTRICAL ONE-LINE DIAGRAM (SHEET 2 OF 2)
E-17 MCC-KPS ELECTRICAL ONE-LINE DIAGRAM (SHEET 1 OF 2)
E-18 MCC-KPS ELECTRICAL ONE-LINE DIAGRAM (SHEET 2 OF 2)
E-19 ELECTRICAL RISER DIAGRAM (SHEET 1 OF 4)
E-20 ELECTRICAL RISER DIAGRAM (SHEET 2 OF 4)
E-21 ELECTRICAL RISER DIAGRAM (SHEET 3 OF 4)
E-22 ELECTRICAL RISER DIAGRAM (SHEET 4 OF 4)
E-23 KEYED NOTES
E-24 GROUNDING GRID DETAILS

ENGINEER OF RECORD:
BOB E. HALLMAN, P.E.
FLORIDA REGISTRATION NO. 20761

Engineering Design Technologies Corp.
P.O. Box 152403
Tampa, FL 33684-2403
813.289.8080
813.282.9184 FAX
engineering@edt1.com
Certificate of Authorization Number: 4795

CITY of TAMPA
WASTEWATER DEPARTMENT

KRAUSE PS REHABILITATION

DRAWING INDEX
(SHEET 1 OF 2)

RED LINES

NO.	DATE	REVISIONS
1	1/27/15	CONFORMED

DRAWN: RWB
DESIGN: STK
QC: BEH
DATE: 05/01/14

INDEX-1

B080-003

DRAWING INDEX

ELECTRICAL/INSTRUMENTATION DRAWINGS

E-25 EXHAUST FAN & SUPPLY FAN LAYOUT

E-26 ELECTRICAL LIGHTING & POWER PLAN (UPPER LEVEL – FLOOR ELEV. 7.54' NAVD) (SHEET 1 OF 2)

E-27 ELECTRICAL LIGHTING & POWER PLAN (UPPER LEVEL – FLOOR ELEV. 7.54' NAVD) (SHEET 2 OF 2)

E-28 ELECTRICAL LIGHTING & POWER PLAN (LOWER LEVEL – FLOOR ELEV. –5.99' NAVD)

E-29 TYPICAL AFD CONNECTION DIAGRAM (SHEET 1 OF 2)

E-30 TYPICAL AFD CONNECTION DIAGRAM (SHEET 2 OF 2)

E-31 AIR COMPRESSOR & PUMP SUCTION VALVE CONTROL DIAGRAMS

E-32 VALVE CONTACT DEVELOPMENT CHARTS

E-33 REMOTE CIRCUIT BREAKER PANEL (RCBP) DETAILS (SHEET 1 OF 3)

E-34 REMOTE CIRCUIT BREAKER PANEL (RCBP) DETAILS (SHEET 2 OF 3)

E-35 REMOTE CIRCUIT BREAKER PANEL (RCBP) DETAILS (SHEET 3 OF 3)

E-36 CIRCUIT BREAKER CONTROL DIAGRAM (SHEET 1 OF 4)

E-37 CIRCUIT BREAKER CONTROL DIAGRAM (SHEET 2 OF 4)

E-38 CIRCUIT BREAKER CONTROL DIAGRAM (SHEET 3 OF 4)

E-39 CIRCUIT BREAKER CONTROL DIAGRAM (SHEET 4 OF 4)

E-40 PUMP/MOTOR CONNECTION DETAIL

E-41 SWITCHBOARD CONDUIT DETAILS

E-42 MAGNETIC FLOW METER CONNECTION DETAIL

E-43 ELECTRICAL DETAILS

E-44 ELECTRICAL DETAILS

E-45 ELECTRICAL DETAILS

E-46 ELECTRICAL DETAILS

E-47 ELECTRICAL PANELBOARD SCHEDULE

E-48 LUMINAIRE SCHEDULE

E-49 CONDUIT SCHEDULE

E-50 CONDUIT SCHEDULE

E-51 CONDUIT SCHEDULE

E-52 CONDUIT SCHEDULE

E-53 CONDUIT SCHEDULE

E-54 CONDUIT SCHEDULE

E-55 CONDUIT SCHEDULE

E-56 CONDUIT SCHEDULE

I-1 CONTROL PANEL/PLC POWER CONNECTIONS

I-2 PROPOSED ANNUNCIATOR RISER DIAGRAM & PARTIAL EQUIPMENT BACK PANEL LAYOUT

I-3 PLC INTERCONNECTION DIAGRAM (SHEET 1 OF 6)

I-4 PLC INTERCONNECTION DIAGRAM (SHEET 2 OF 6)

I-5 PLC INTERCONNECTION DIAGRAM (SHEET 3 OF 6)

I-6 PLC INTERCONNECTION DIAGRAM (SHEET 4 OF 6)

I-7 PLC INTERCONNECTION DIAGRAM (SHEET 5 OF 6)

I-8 PLC INTERCONNECTION DIAGRAM (SHEET 6 OF 6)

I-9 BUBBLER PANEL DETAILS (SHEET 1 OF 2)

I-10 BUBBLER PANEL DETAILS (SHEET 2 OF 2)

I-11 TEMPERATURE ALARM/MONITOR DETAILS

HVAC DRAWINGS

M0.1 MECHANICAL LOWER LEVEL DEMOLITION PLAN

M2.1 MECHANICAL LOWER LEVEL DEMOLITION PLAN

M2.2 MECHANICAL UPPER LEVEL DEMOLITION PLAN

M4.1 MECHANICAL LOWER LEVEL RENOVATION PLAN

M4.2 MECHANICAL UPPER LEVEL (LOW) RENOVATION PLAN

M4.3 MECHANICAL UPPER LEVEL (HIGH) RENOVATION PLAN

M8.1 MECHANICAL SECTION

M9.1 MECHANICAL DETAILS

M10.1 MECHANICAL CONTROLS / SEQUENCE OF OPERATIONS

M11.1 MECHANICAL FAN SCHEDULE

ENGINEER OF RECORD:
BOB E. HALLMAN, P.E.
FLORIDA REGISTRATION NO. 20761

Engineering Design Technologies Corp.
P.O. Box 152403
Tampa, FL 33684-2403
813.289.8080
813.282.9184 FAX
engineering@edt1.com

Certificate of Authorization Number: 4795

CITY of TAMPA
WASTEWATER DEPARTMENT

KRAUSE PS REHABILITATION

DRAWING INDEX
(SHEET 2 OF 2)

RED LINES

NO.	DATE	REVISIONS
1	1/27/15	CONFORMED

DRAWN: RWB
DESIGN: STK
QC: BEH
DATE: 05/01/14

INDEX-2

B080-004

GENERAL NOTES:

1. CONTRACTOR SHALL COORDINATE ALL CONSTRUCTION ACTIVITIES WITH THE ENGINEER AND THE CITY OF TAMPA WASTEWATER DEPARTMENT PERSONNEL PRIOR TO COMMENCING CONSTRUCTION ACTIVITIES.
2. ALL ELEVATIONS SHOWN ARE BASED ON 1988 NAVD.
3. EXISTING DIMENSIONS AND ELEVATIONS ARE BASED ON THE BEST INFORMATION AVAILABLE. TRUE DIMENSIONS AND ELEVATIONS SHALL BE DETERMINED IN THE FIELD PRIOR TO LAYOUT AND SHOP DRAWING SUBMITTALS.
4. ALL SUBMITTALS AND SHOP DRAWINGS SHALL BE ORIGINALS OR HIGH QUALITY COPIES (EASILY READABLE). NO FAXED SHEETS OR POOR QUALITY COPIES WILL BE ACCEPTED FOR SUBMITTAL REVIEW.
5. THE CONTRACTOR IS RESPONSIBLE FOR PROVIDING, INSTALLING, LEVELING AND ALIGNING MOTOR AND PUMP. PROCEDURES FOR INSTALLATION, AS OUTLINED IN THE HYDRAULICS INSTITUTE STANDARDS, MOST CURRENT EDITION, SHALL BE ADHERED TO. SEE SPECIFIC PROVISIONS. IF THERE IS A CONFLICT BETWEEN THE REQUIREMENTS OF THE CONTRACT SPECIFICATIONS AND THE HYDRAULIC INSTITUTE STANDARDS, THE MOST STRINGENT STANDARD SHALL BE FOLLOWED.
6. REPLACE ALL AIR SUPPLY PIPING AND VACUUM PIPING. LAY–OUT NEW PIPING AS REQUIRED FOR THE NEW EQUIPMENT. ISOLATION BALL VALVES AND PIPE UNIONS SHALL BE PROVIDED TO ALLOW REMOVAL OF EQUIPMENT. PIPING SHALL BE TYPE K HARD DRAWN COPPER WITH CAST BRASS SOLDERED FITTINGS. ALL JOINTS SHALL BE THREADED OR SOLDERED. COPPER PIPE SHALL MEET THE REQUIREMENTS AND SHALL BE PAINTED IN ACCORDANCE WITH THE CONTRACT SPECIFICATIONS.
7. PUMP ANCHOR BOLTS SHALL BE PER PUMP MANUFACTURER'S RECOMMENDATIONS. ANCHOR BOLTS SHALL BE DOUBLE–NUTTED AND SHALL HAVE SUFFICIENT LENGTH SO THAT THE BOLTS EXTEND BEYOND THE FASTENING NUTS BY A MINIMUM OF ½ INCH.
8. ALL HARDWARE, UNLESS OTHERWISE NOTED, SHALL BE TYPE 316 STAINLESS STEEL.
9. PROPOSED STEEL SPOOL PIECES AND FITTINGS (INCLUDING PUMP DISCHARGE AND SUCTIONS REDUCERS) SHALL BE FABRICATED TO SUIT THE DIMENSIONS OF THE PROPOSED EQUIPMENT OR LAYOUT, AND SHALL BE ASTM A 36 STEEL WITH A MINIMUM WALL THICKNESS OF ½ INCH STEEL PIPE SHALL BE LINED WITH COAL TAR EPOXY (MINIMUM 3/32" THICK) IN ACCORDANCE WITH AWWA C203. FABRICATED STEEL FITTINGS SHALL BE MANUFACTURED BY AN AWWA CERTIFIED FABRICATOR.
10. ALL FIELD WELDS SHALL CONFORM TO PROCEDURES OUTLINED IN AWWA M 11 AND AWWA C 206.
11. CONTRACTOR SHALL PROCURE THE SERVICES OF AN INDEPENDENT CERTIFIED WELDING INSPECTOR TO TEST ALL FIELD WELDS. CERTIFIED WELD INSPECTOR SHALL PERFORM AS A MINIMUM A VISUAL INSPECTION AND EITHER A DYE PENETRATING TINT OR MAG PARTICLE TEST TO ASSERT QUALITY OF FIELD WELDS.
12. BURIED DUCTILE IRON PIPE SHALL BE MINIMUM PRESSURE CLASS 200 AND SHALL A HAVE CEMENT MORTAR LINING, EXCEPT WHERE REQUIRED TO HAVE CERAMIC EPOXY LINING. ALL FITTINGS, BENDS AND VALVES FOR THIS PIPELINE SHALL BE POLYETHYLENE ENCASED AND INSTALLED USING CLASS C BEDDING, UNLESS OTHERWISE SHOWN OR DIRECTED.
13. RESTRAIN ALL NEW DUCTILE IRON PIPE, VALVES AND FITTINGS. BURIED DUCTILE IRON PIPE SHALL BE MECHANICAL JOINT TYPE AND RESTRAINED BY EXTERNAL JOINT RESTRAINERS "MEGALUG SERIES 1100" AS MANUFACTURED BY EBBA IRON OR APPROVED EQUAL.
14. EXPOSED DUCTILE IRON PIPE SHALL BE FLANGED, MINIMUM CLASS 53 AND SHALL HAVE CERAMIC EPOXY LINER.
15. THE CONTRACTOR SHALL INSTALL THE FORCE MAIN TO THE ELEVATIONS AND SLOPES SHOWN ON THE DRAWINGS. THERE SHALL BE NO INTERMEDIATE HIGH OR LOW POINTS BETWEEN V.P.I.'S.
16. CONTRACTOR SHALL RESTORE ANY LANDSCAPING, SIDEWALK, CURBING, FENCING, SODDING AND SPRINKLER SYSTEM PIPING THAT MAY HAVE BEEN DAMAGED DURING CONSTRUCTION TO ITS ORIGINAL CONDITION OR BETTER.
17. THE CONTRACTOR SHALL REMOVE ALL DEBRIS FROM WETWELL, PRESSURE WASH ALL WETWELL CONCRETE SURFACES, PREPARE CONCRETE SURFACE AND APPLY 125 MILS OF AN APPROVED COATING SYSTEM IN ACCORDANCE WITH TECHNICAL SPECIFICATION NO. 52 – MANHOLE AND STRUCTURE REHABILITATION.
18. OSHA STANDARD SAFETY EQUIPMENT SUCH AS, BUT NOT LIMITED TO, SAFETY HARNESSES, GAS MONITORS, LOWER EXPLOSIVE LIMIT(LEL) DETECTORS, BREATHING APPARATUS, ETC. SHALL BE UTILIZED WHERE THE WORK DICTATES THEIR USE.
19. CONTRACTOR SHALL PRESSURE WASH ALL EXISTING WALLS AND CEILINGS WITHIN THE PUMP ROOM AND THE WET WELL TO REMOVE ALL LOOSE PAINT AND DEBRIS FROM THE WALLS. CONTRACTOR SHALL CONTAIN ALL PAINT DEBRIS AND PREVENT FROM ENTERING THE SEWER SYSTEM AND DISPOSE OF PROPERLY. CONTRACTOR SHALL PAINT ALL INTERIOR WALLS OF THE PUMP ROOM BELOW ELEVATION +7.54 (LOWER LEVEL), IN ACCORDANCE WITH THE SPECIFICATIONS. REFER TO PLAN SHEET S–7 FOR CLEANING AND COATING OF THE STEEL ROOF FRAMING.

DEMOLITION NOTES:

1. ALL DIMENSIONS ARE APPROXIMATE. ACTUAL DIMENSIONS SHALL BE DETERMINED IN THE FIELD.
2. SALVAGEABLE MATERIALS AS DETERMINED BY THE WASTEWATER DEPARTMENT PERSONNEL SHALL BE DELIVERED TO THE CITY OF TAMPA'S HOWARD F. CURREN AWTP, LOCATED AT 2700 MARITIME BLVD., TAMPA, FL 33605. NON–SALVAGEABLE MATERIALS ARE TO BE REMOVED FROM SITE AND PROPERLY DISPOSED OF AT THE CONTRACTOR'S EXPENSE. IN GENERAL, ALL PUMP AND CONTROLS EQUIPMENT SHALL REMAIN PROPERTY OF THE CITY AND BE CONSIDERED SALVAGEABLE. REFER TO SPECIFIC PROVISIONS.
3. CONTRACTOR SHALL CUT ALL EXPOSED REINFORCING STEEL TO A DEPTH OF 1–INCH BELOW THE EXPOSED SURFACE AND THE OPENING SHALL BE SEALED WITH GROUT.

LEGEND

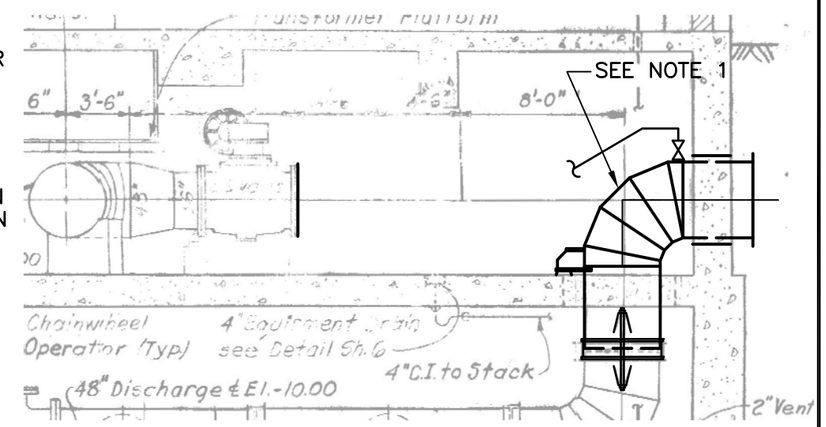

NOTES:

1. ALL WORK INCLUDED IN THIS CONTRACT IS SHOWN IN BOLD. LIGHT LINEWEIGHT DENOTES EQUIPMENT, STRUCTURES, PIPING, ETC. THAT WILL REMAIN AND BE REUSED AND IS ENTENDED AS BACKGROUND INFORMATION, EXCEPT WHERE NOTED OTHERWISE IN THESE PLANS BY BOLD ANNOTATION.

RED LINES

GREELEY AND HANSEN
1715 N. WESTSHORE BLVD., STE. 464
TAMPA, FLORIDA 33607
CERTIFICATE OF AUTHORIZATION NO. 37

P.E. NAME: FREDDY J. BETANCOURT P.E. NO. 68072
P.E. NAME:
DATE:

EDT Engineering Design Technologies Corp.
P.O. Box 152403
Tampa, FL 33684-2403
813.289.8080
813.282.9184 FAX
engineering@edt1.com
Certificate of Authorization Number: 4795

CITY of TAMPA
WASTEWATER DEPARTMENT

KRAUSE PS REHABILITATION

GENERAL NOTES

NO.	DATE	REVISIONS
2	1/27/15	CONFORMED
1	7/11/14	ADD NOTE 19

DRAWN: J. WHITE
DESIGN: FJB
QC: DCH
DATE: 01/27/15

SHEET G-1

B080-005

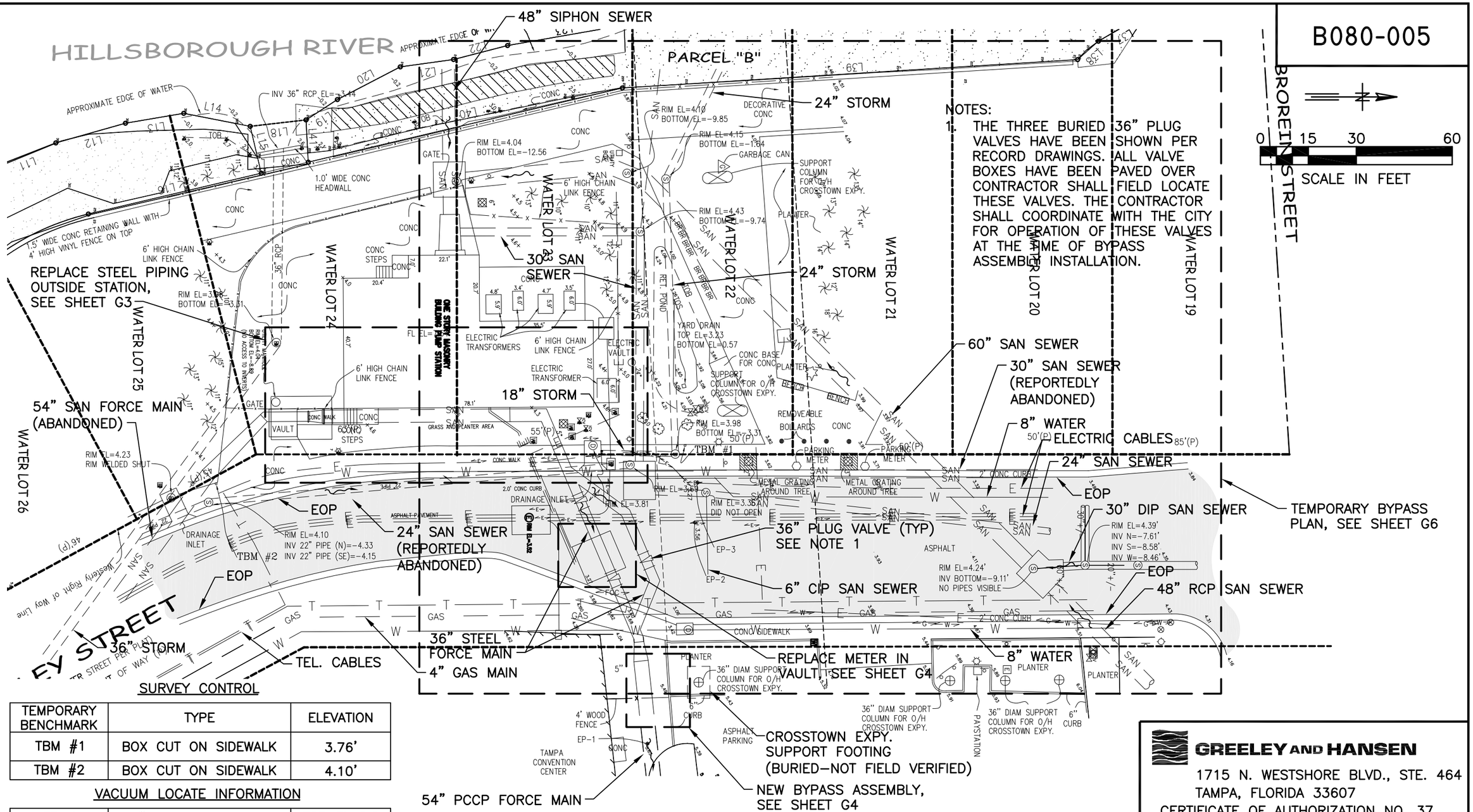

SURVEY CONTROL

TEMPORARY BENCHMARK	TYPE	ELEVATION
TBM #1	BOX CUT ON SIDEWALK	3.76'
TBM #2	BOX CUT ON SIDEWALK	4.10'

VACUUM LOCATE INFORMATION

EP–1	54" PCCP FORCE MAIN	TOP EL 0.2
EP–2	ELECTRICAL CONDUITS	TOP EL 0.3
EP–3	ELECTRICAL CABLE	TOP EL –1.2

MECHANICAL SITE PLAN

SCALE: 1" = 30'

GREELEY AND HANSEN
1715 N. WESTSHORE BLVD., STE. 464
TAMPA, FLORIDA 33607
CERTIFICATE OF AUTHORIZATION NO. 37

P.E. NAME: FREDDY J. BETANCOURT P.E. NO. 68072
P.E. NAME:
DATE:

Engineering Design Technologies Corp.
P.O. Box 152403
Tampa, FL 33684-2403
813.289.8080
813.282.9184 FAX
engineering@edt1.com
Certificate of Authorization Number: 4795

CITY of TAMPA
WASTEWATER DEPARTMENT

KRAUSE PS REHABILITATION

MECHANICAL SITE PLAN

RED LINES

NO.	DA
1	1/27

NO CHANGES

DRAWN: J. WHITE
DESIGN: FJB
QC: DCH
DATE: 01/27/15

SHEET G-2

B080-006

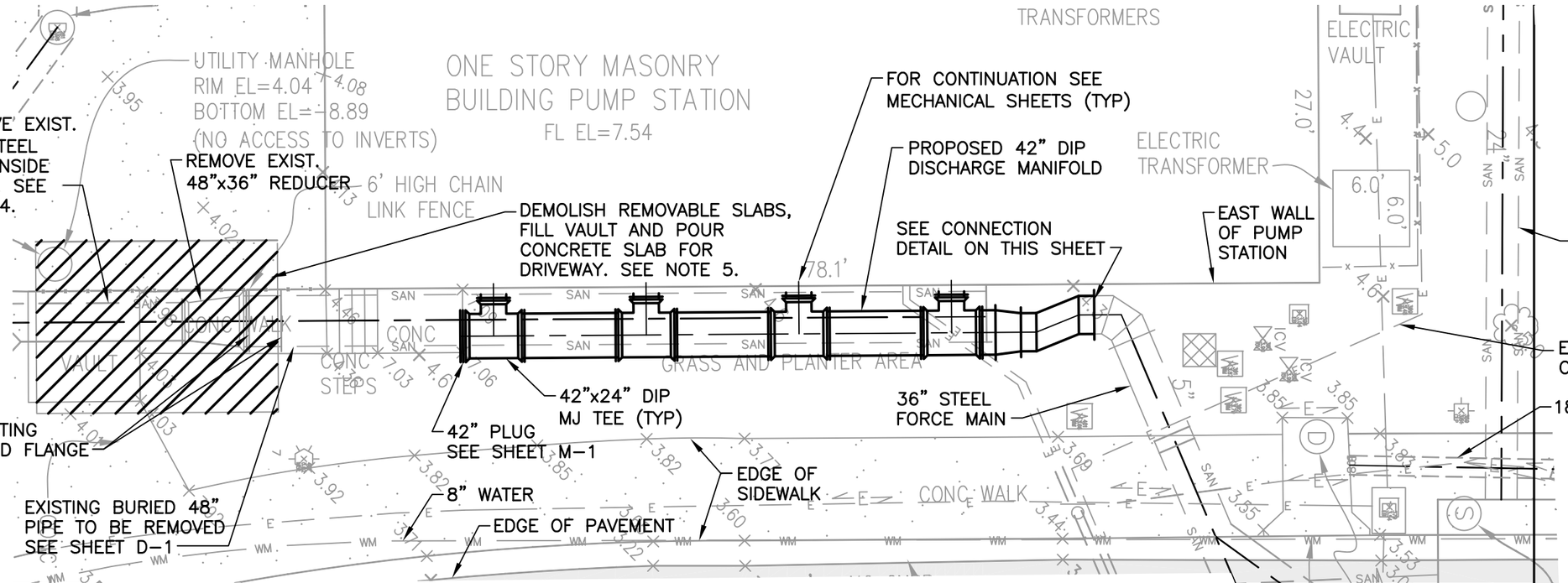

MECHANICAL SITE PLAN

SCALE: 1" = 10'

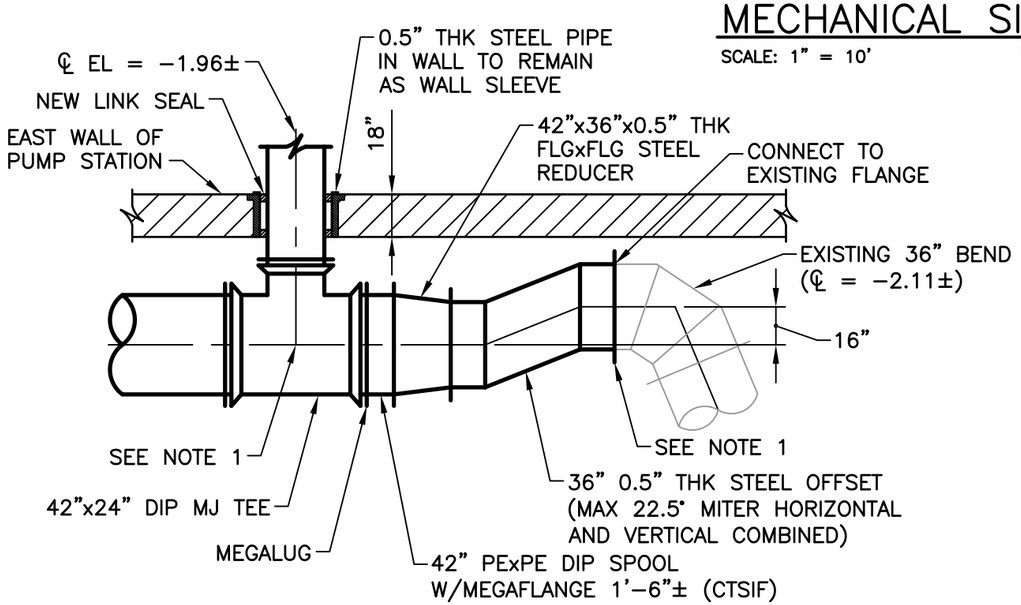

CONNECTION DETAIL

SCALE: 3/16" = 1'-0"

NOTES:

1. CONTRACTOR SHALL FIELD VERIFY LOCATION OF AND ELEVATION EXISTING FLANGE ON 36" STEEL BEND AND CENTER OF WALL PENETRATION. THIS INFORMATION SHALL BE INCLUDED IN SHOP DRAWING FOR FABRICATED OFFSET.
2. CONTRACTOR SHALL ASSEMBLE CONNECTION FROM EXISTING BEND AND CONSTRUCT SOUTHWARD USING THE 42" DIP PExPE SPOOL CUT TO SIZE IN FIELD FOR ALIGNMENT.
3. 36" STEEL OFFSET FITTING AND 42"x36" STEEL REDUCER SHALL MEET AWWA C208.
4. REMOVE PIPE INSIDE THE VAULT, AS SHOWN. CAP PIPE EXTENDING SOUTH OF VAULT WITH MASONRY BULKHEAD, REFER TO SHEET G-9.
5. REMOVE MANHOLE FRAME AND COVER AND FILL VAULT WITH EXCAVATABLE FLOWABLE FILL. SEE SHEET S-18 FOR FLOWABLE FILL SPECIFICATION. CUT 2 LF OF VERTICAL WALLS OF VAULT, COMPACT DIRT AND POUR 8" THK REINFORCED SLAB FOR DRIVEWAY. APPROXIMATE VAULT DIMENSIONS ARE 11' WIDE, 17' LONG AND AN AVERAGE OF 10' DEEP. REINFORCE 8-INCH SLAB WITH TWO MATS (TOP AND BOTTOM) OF #5 BARS @ 12 ON CENTER EACH WAY.

GREELEY AND HANSEN
1715 N. WESTSHORE BLVD., STE. 464
TAMPA, FLORIDA 33607
CERTIFICATE OF AUTHORIZATION NO. 37

P.E. NAME: FREDDY J. BETANCOURT P.E. NO. 68072
P.E. NAME:

RED LINES

Changes
See Sheet G-3A

Engineering Design Technologies Corp.
P.O. Box 152403
Tampa, FL 33684-2403
813.289.8080
813.282.9184 FAX
engineering@edt1.com
Certificate of Authorization Number: 4795

CITY of TAMPA
WASTEWATER DEPARTMENT

KRAUSE PS REHABILITATION

MECHANICAL
YARD PIPING

NO.	DA
1	1/2

DRAWN: J. WHITE
DESIGN: FJB
QC: DCH
DATE: 01/27/15

SHEET G-3

B080-010

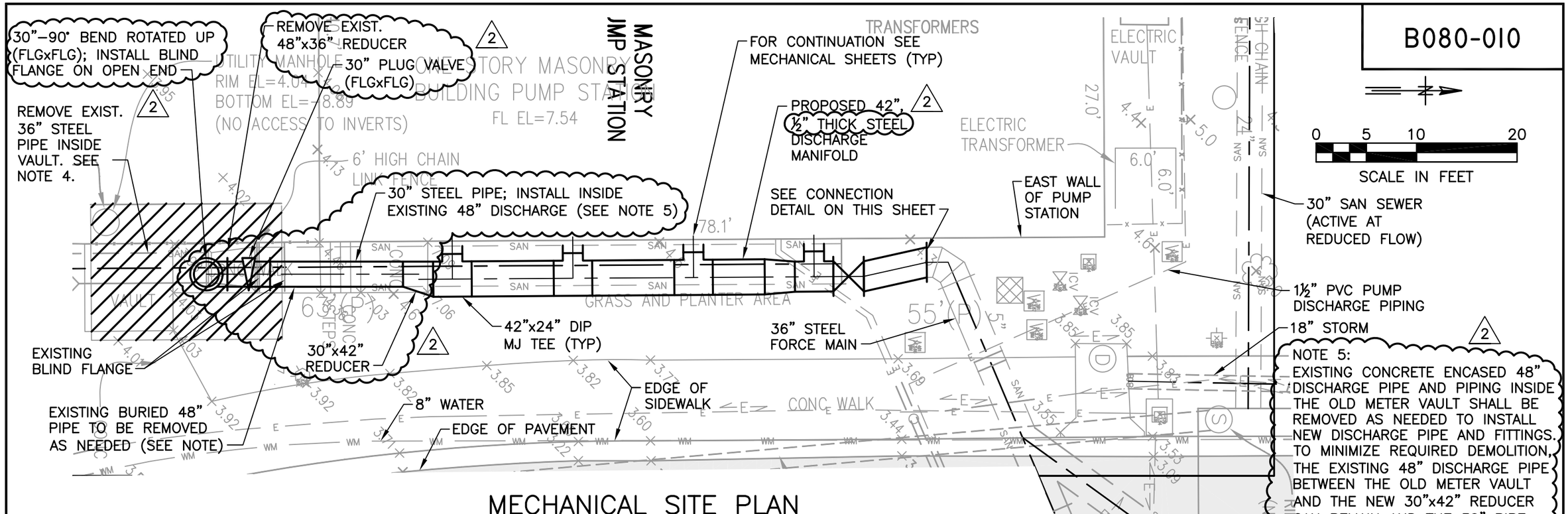

MECHANICAL SITE PLAN

SCALE: 1" = 10'

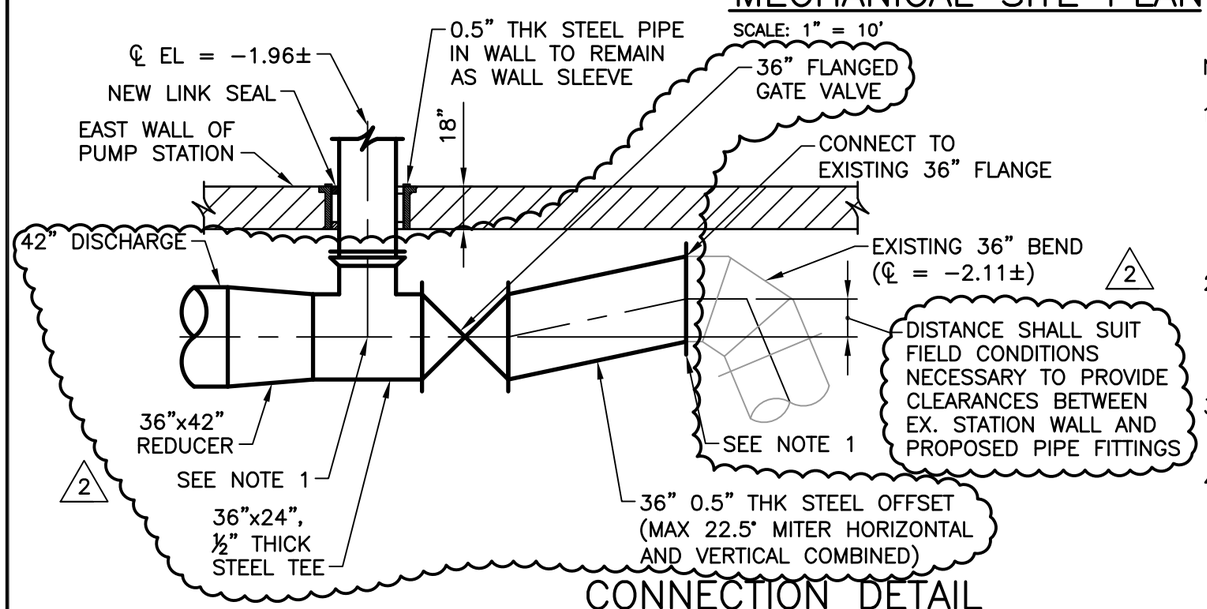

CONNECTION DETAIL

SCALE: 3/16" = 1'–0"

NOTES:

1. CONTRACTOR SHALL FIELD VERIFY LOCATION OF AND ELEVATION EXISTING FLANGE ON 36" STEEL BEND AND CENTER OF WALL PENETRATION. THIS INFORMATION SHALL BE INCLUDED IN SHOP DRAWING FOR FABRICATED OFFSET.
2. CONTRACTOR SHALL ASSEMBLE CONNECTION FROM EXISTING BEND AND CONSTRUCT SOUTHWARD USING THE 42" DIP PExPE SPOOL CUT TO SIZE IN FIELD FOR ALIGNMENT.
3. 36" STEEL OFFSET FITTING AND 42"x36" STEEL REDUCER SHALL MEET AWWA C208.
4. REMOVE PIPE INSIDE THE VAULT, AS SHOWN.

GREELEY AND HANSEN
1715 N. WESTSHORE BLVD., STE. 464
TAMPA, FLORIDA 33607
CERTIFICATE OF AUTHORIZATION NO. 37

P.E. NAME: FREDDY J. BETANCOURT P.E. NO. 68072
P.E. NAME:

Engineering Design Technologies Corp.
P.O. Box 152403
Tampa, FL 33684-2403
813.289.8080
813.282.9184 FAX
engineering@edt1.com
Certificate of Authorization Number: 4795

CITY of TAMPA
WASTEWATER DEPARTMENT

KRAUSE PS REHABILITATION

MECHANICAL
YARD PIPING

NO.	DATE	REVISIONS
2	10	URATION
1	1/	

DRAWN: J. WHITE
DESIGN: FJB
QC: DCH
DATE: 05/01/14

RED LINES

Revised G-3

Sheet G-3A

Layout1, 10/7/2015 11:32:35 AM

B080-007

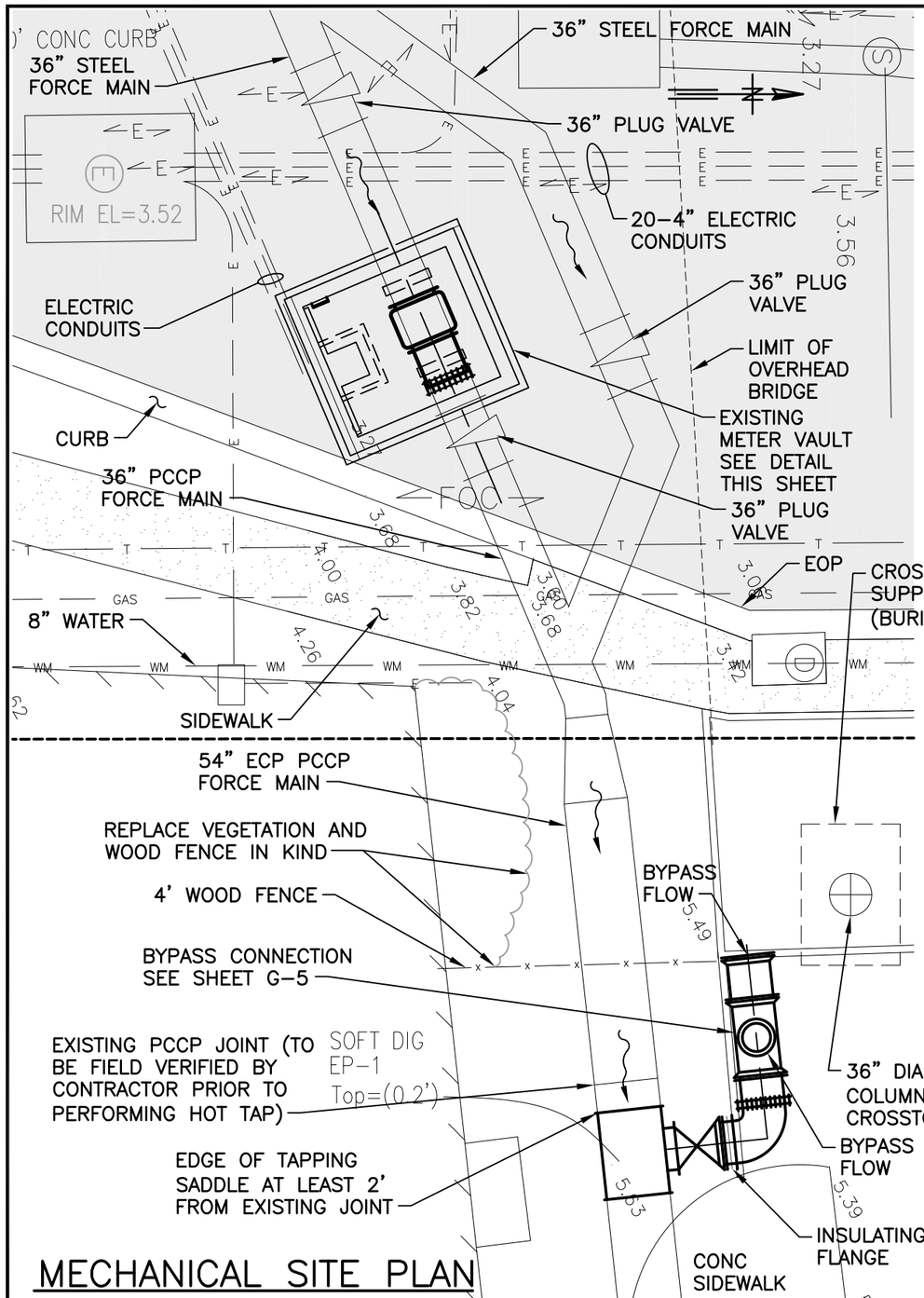

MECHANICAL SITE PLAN

SCALE: 1" = 10'

0 5 10 20

SCALE IN FEET

NOTES:
1. REMOVABLE SLABS COVERED BY ASPHALT ROAD SURFACE.

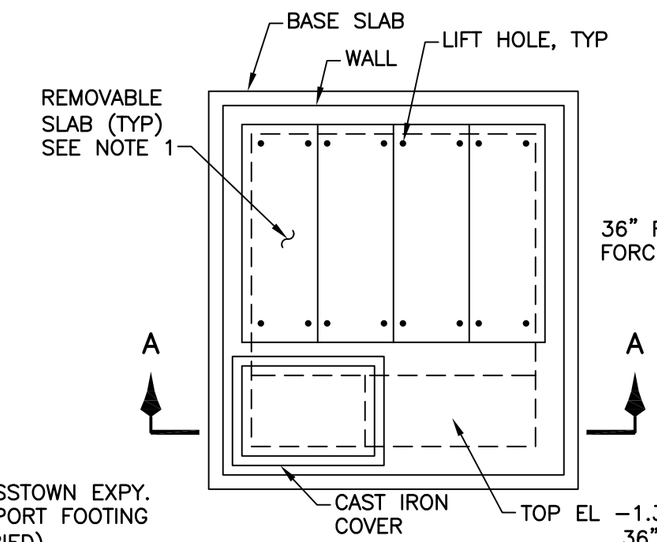

TOP PLAN VIEW

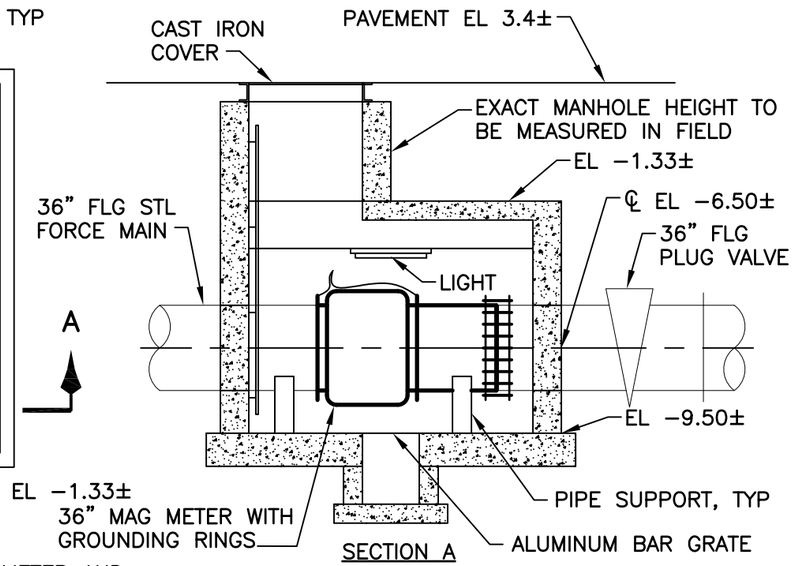

SECTION A

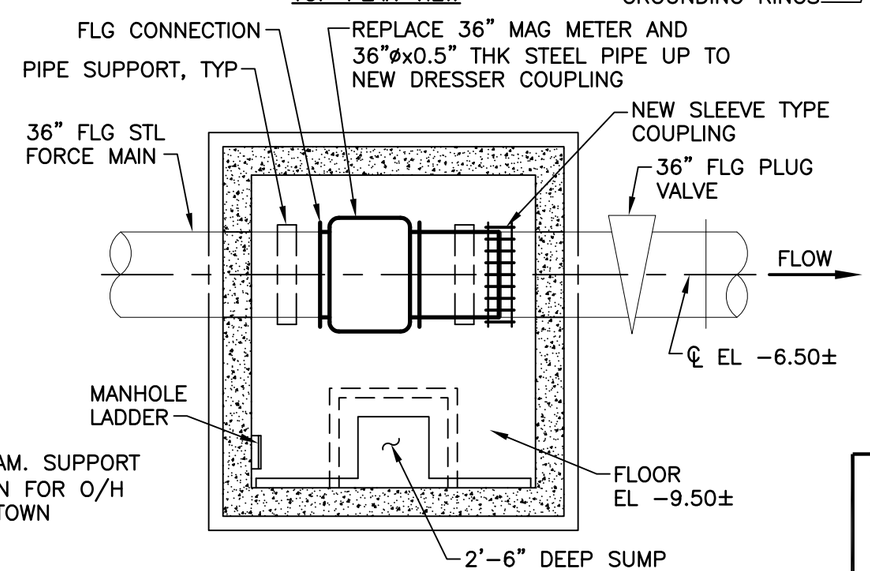

SECTIONAL PLAN VIEW

EXISTING METER VAULT DETAIL

SCALE: 3/16" = 1'-0"

NOTES:
1. CAREFULLY EXCAVATE AND EXPOSE REMOVABLE TOP SLABS AS NEEDED TO ACCOMMODATE INSTALLATION OF NEW FLOW METER.
2. REPAIR ANY DAMAGE TO TOP SLAB. SLAB JOINTS SHALL BE PROPERLY SEALED DURING REINSTALLATION. SEAL JOINTS WITH RN-103 RAM-NEK PREFORMED JOINT SEALANT OR APPROVED EQUAL.

GREELEY AND HANSEN
1715 N. WESTSHORE BLVD., STE. 464
TAMPA, FLORIDA 33607
CERTIFICATE OF AUTHORIZATION NO. 37

P.E. NAME: FREDDY J. BETANCOURT P.E. NO. 68072

RED LINES

Changes
See Sheet G-6A

EDT
Engineering Design Technologies Corp.
P.O. Box 152403
Tampa, FL 33684-2403
813.289.8080
813.282.9184 FAX
engineering@edt1.com
Certificate of Authorization Number: 4795

CITY of TAMPA
WASTEWATER DEPARTMENT

KRAUSE PS REHABILITATION

METER REPLACEMENT

NO.	D
1	1/

DRAWN: J.WHITE
DESIGN: FJB
QC: DCH
DATE: 01/27/15

SHEET G-4

B080-008

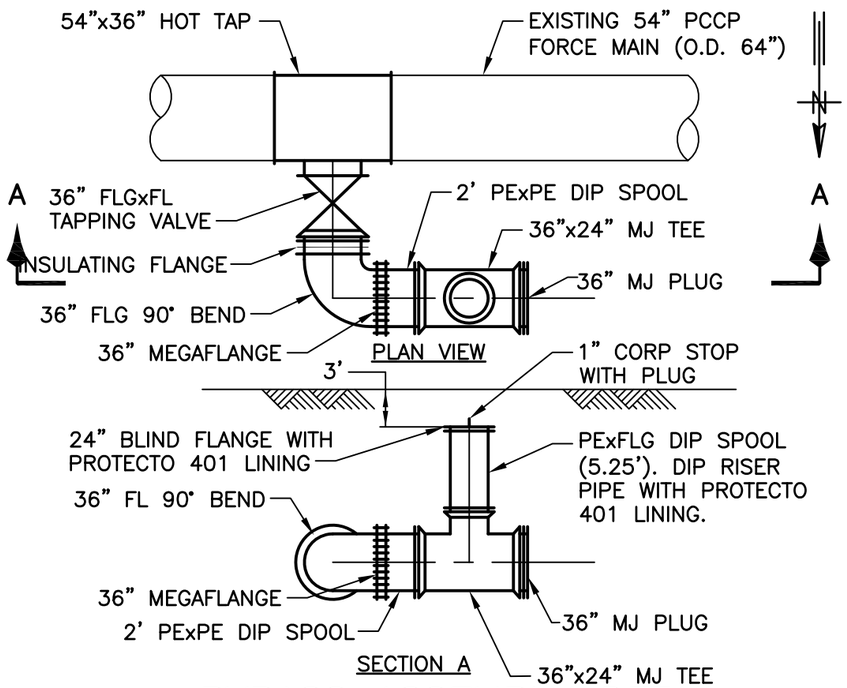

BYPASS ASSEMBLY DETAIL

NOT TO SCALE

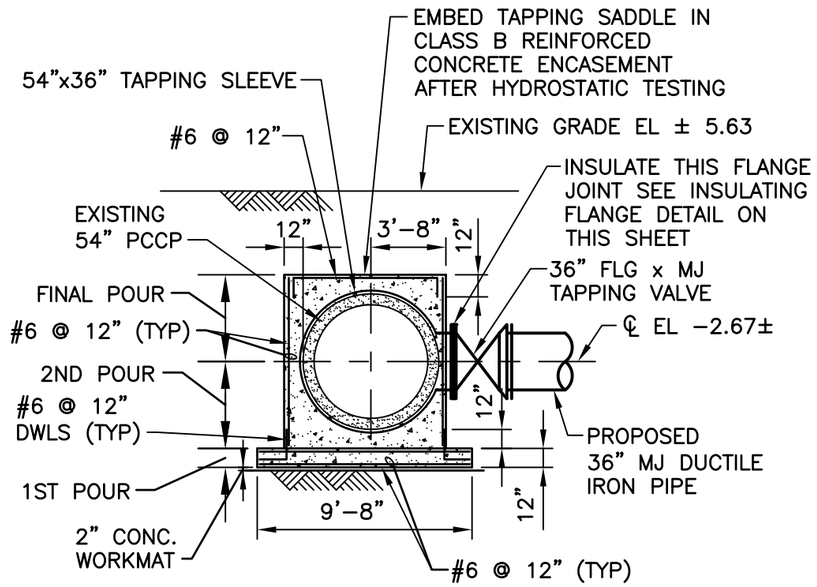

DETAIL OF PIPE CONNECTION TO EXISTING 54" PCCP

NOT TO SCALE

NOTES:

1. CONTRACTOR SHALL PROVIDE ADEQUATE TEMPORARY SUPPORT TO EXISTING PIPE WHILE THE NEW SUPPORT SLAB IS BEING CONSTRUCTED. CONTRACTOR SHALL SUBMIT SHOP DRAWING, INDICATING INSTALLATION PROCEDURES FOR APPROVAL PRIOR TO INITIATING THE WORK.
2. CONTRACTOR SHALL TAKE EXTREME CARE CONSTRUCTING NEW SUPPORT SLAB AND ENCASEMENT IN ORDER TO PREVENT ANY DAMAGE TO EXISTING PIPE. ALL THE ABOVE WORK SHALL BE DONE IN THE PRESENCE OF THE ENGINEER.
3. THE SUPPORT SLAB MAY BE CONSTRUCTED IN SECTIONS WITH KEYWAY JOINTS AND WITH REINFORCING LAPPED 2' MIN.
4. ALL CONCRETE SHALL BE CLASS B.
5. EXTEND CONCRETE ENCASEMENT A MINIMUM OF 12" AROUND TAPPING SADDLE, EXCEPT FOR NORTH FACE AS SHOWN TO PERMIT ASSEMBLY OF INSULATING FLANGE JOINT. CONCRETE ENCASEMENT SHALL EXTEND A MINIMUM OF 12" EAST AND WEST OF THE TAPPING SADDLE.

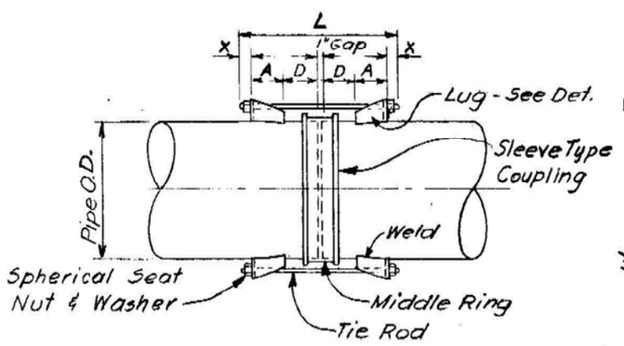

HARNESS ASSEMBLY

NOT TO SCALE

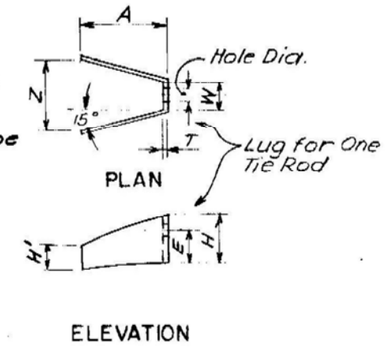

DETAIL OF LUG

NOT TO SCALE

PIPE SIZE	WALL THICKNESS	PIPE O.D.	MIDDLE RING COUPLING		HARNESS TIE ROD				HARNESS LUGS - MINIMUM DIMENSIONS									
			LENGTH	THICKNESS	NO.	DIA.	X	L	D	A	W	Z	T	E	H	H'	HOLE DIA.	WELD SIZE
36"	1/2"	37"	7"	3/8"	2	1 3/8"	1 7/8"	36 3/4"	8 1/2"	7 1/2"	2 13/16"	7"	1/2"	3 3/4"	5 3/8"	2 1/2"	1 1/2"	5/16"

DETAILS OF HARNESSED SLEEVE – TYPE COUPLING JOINT

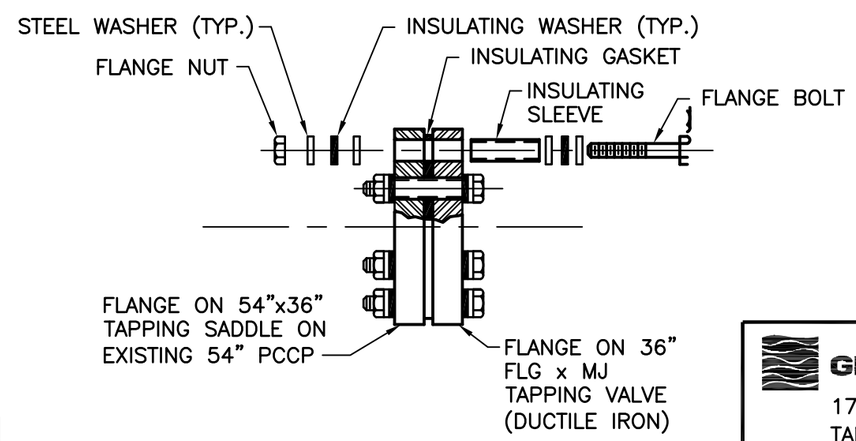

INSULATING FLANGE

NOT TO SCALE

GREELEY AND HANSEN
1715 N. WESTSHORE BLVD., STE. 464
TAMPA, FLORIDA 33607
CERTIFICATE OF AUTHORIZATION NO. 37

P.E. NAME: FREDDY J. BETANCOURT P.E. NO. 68072

P.E. NAME: _____

DATE: _____

Engineering Design Technologies Corp.
P.O. Box 152403
Tampa, FL 33684-2403
813.289.8080
813.282.9184 FAX
engineering@edt1.com
Certificate of Authorization Number: 4795

CITY of TAMPA
WASTEWATER DEPARTMENT

KRAUSE PS REHABILITATION

BYPASS DETAILS

RED LINES

NO.	DATE
1	1/27

NO CHANGES

DRAWN: J. WHITE
DESIGN: FJB
QC: DCH
DATE: 01/27/15

SHEET G-5

B080-009

NOTES:

1. RIVERWALK ACCESS SHALL REMAIN OPEN DURING CONSTRUCTION.
2. CONTRACTOR SHALL INSTALL 3 INFLATABLE PLUGS TO SEAL WASTEWATER FLOW DURING CONSTRUCTION.
3. ONE LANE OF TRAFFIC SHALL REMAIN OPEN DURING CONSTRUCTION FOR EXITING PARKING GARAGE. TEMPORARY CLOSURE FOR INSTALLATION OF TEMPORARY BYPASS PIPE SHALL BE LIMITED TO 24 HOURS, SCHEDULED WITH A MINIMUM TWO WEEK NOTICE TO THE CITY.
4. REFER TO SPECIAL PROVISION FOR SIZING REQUIREMENT OF BYPASS PUMPING SYSTEM.
5. 30" SANITARY SEWER IS ACTIVE BUT AT A VERY REDUCED FLOW (ESTIMATED PEAK FLOW RATE IS 1,000 GPM). THIS SANITARY SYSTEM IS NOT CONNECTED WITH THE 60" SANITARY INTERCEPTOR AND THUS REQUIRES A SEPARATE BYPASS SYSTEM. CONTRACTOR SHALL COORDINATE WITH CITY OF TAMPA TO SIZE PUMP APPROPRIATELY. BYPASS SYSTEM SHALL INCLUDE A FULLY REDUNDANT BACKUP.
6. ALL LANDSCAPE DISTURBED DUE TO BYPASS INSTALLATION SHALL BE REPLACED IN KIND.
7. ROADWAY SHALL BE FULLY RESTORED AFTER BYPASS IS COMPLETE. REFER TO SHEET G-9 FOR RESTORATION DETAIL.
8. MAINTAIN ACCESS TO THE CITY PARKING LOT UNDER THE CROSSTOWN EXPRESSWAY AUTHORITY DURING CONSTRUCTION. BYPASS PIPE CAN EITHER BE BURIED ACROSS ENTRANCE LOCATED UNDER THE ASPHALT PAVEMENT OF ASHLEY ST. OR THE CONCRETE DRIVEWAY AND PARTIALLY PLACED WITH A STEEL RAMP ACROSS FOR CAR ACCESS AS SHOWN ON DETAIL PLAN SHEET G-9. AFTER REMOVAL OF THE BYPASS PUMPING SYSTEM, RESTORE TRENCH BACKFILL COMPACTED TO AT LEAST 98 PERCENT OF THE MODIFIED PROCTOR MAXIMUM DRY DENSITY (ASTM D-1557). REPLACE ASPHALT IN ACCORDANCE WITH THE TYPICAL PAVING DETAIL ON PLAN SHEET G-9 OR POUR 8" CONCRETE REINFORCED SLAB FOR DRIVEWAY, DEPENDING ON LOCATION CHOSEN BY THE CONTRACTOR AND APPROVED BY THE ENGINEER. REINFORCE 8-INCH SLAB WITH TWO MATS (TOP AND BOTTOM) OF #5 BARS @ 12" ON CENTER EACH WAY.

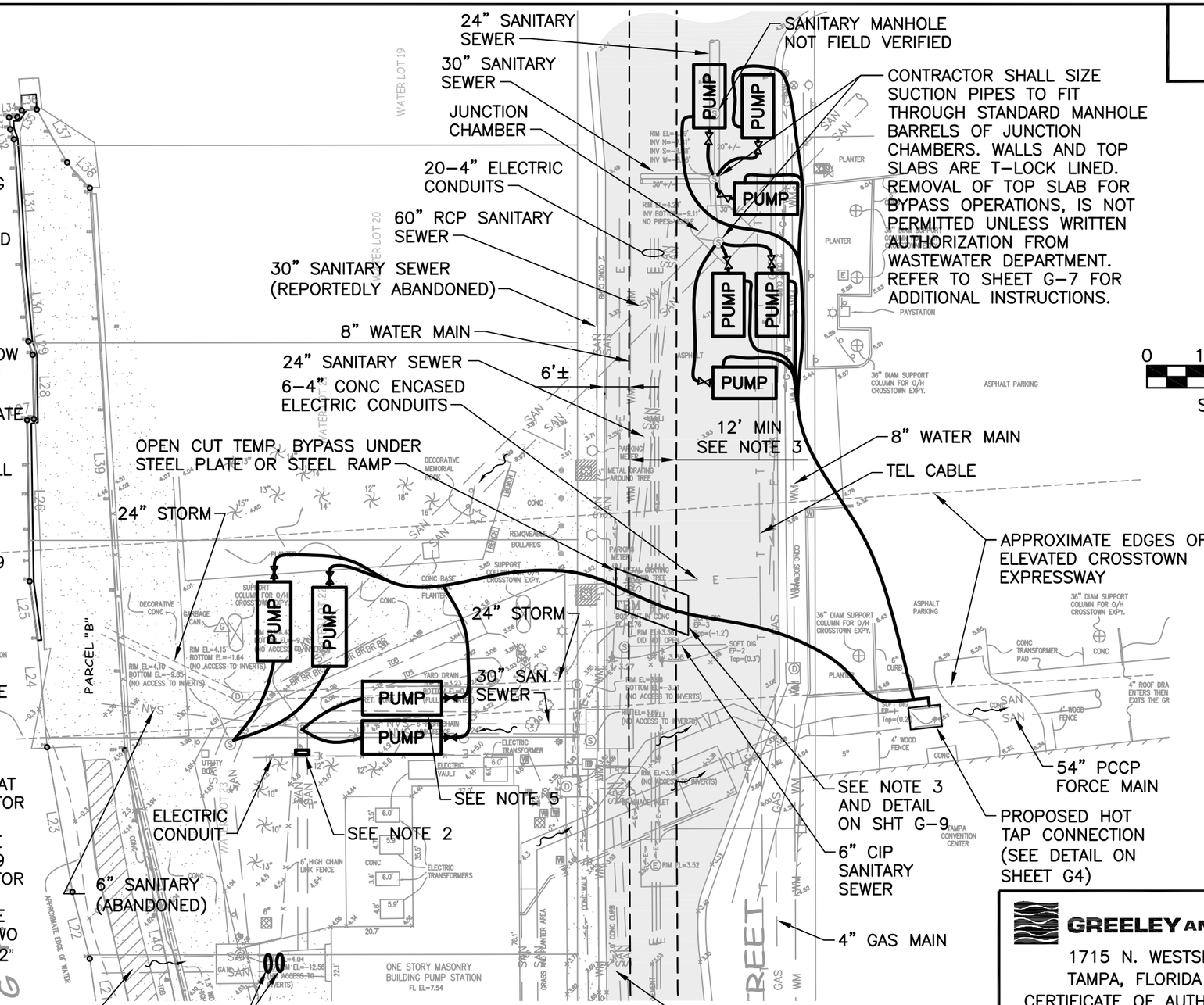

PLAN VIEW
SCALE: 1" = 30'

GREELEY AND HANSEN
1715 N. WESTSHORE BLVD., STE. 464
TAMPA, FLORIDA 33607
CERTIFICATE OF AUTHORIZATION NO. 37

P.E. NAME: FREDDY J. BETANCOURT P.E. NO. 68072

P.E. NAME:_____

Engineering Design Technologies Corp.
P.O. Box 152403
Tampa, FL 33684-2403
813.289.8080
813.282.9184 FAX
engineering@edt1.com
Certificate of Authorization Number: 4795

CITY of TAMPA
WASTEWATER DEPARTMENT

KRAUSE PS REHABILITATION

TEMPORARY BYPASS-CONCEPTUAL PLAN

RED LINES

NO.	DAT
2	1/27/
1	7/11

CHANGES SEE G-6A

DRAWN: J. WHITE
DESIGN: FJB
QC: DCH
DATE: 01/27/15

SHEET G-6

B080-009

NOTES:

1. RIVERWALK ACCESS SHALL REMAIN OPEN DURING CONSTRUCTION.
2. CONTRACTOR SHALL INSTALL 3 INFLATABLE PLUGS TO SEAL WASTEWATER FLOW DURING CONSTRUCTION.
3. ONE LANE OF TRAFFIC SHALL REMAIN OPEN DURING CONSTRUCTION FOR EXITING PARKING GARAGE. TEMPORARY CLOSURE FOR INSTALLATION OF TEMPORARY BYPASS PIPE SHALL BE LIMITED TO 24 HOURS, SCHEDULED WITH A MINIMUM TWO WEEK NOTICE TO THE CITY.
4. REFER TO SPECIAL PROVISION FOR SIZING REQUIREMENT OF BYPASS PUMPING SYSTEM.
5. 30" SANITARY SEWER IS ACTIVE BUT AT A VERY REDUCED FLOW (ESTIMATED PEAK FLOW RATE IS 1,000 GPM). THIS SANITARY SYSTEM IS NOT CONNECTED WITH THE 60" SANITARY INTERCEPTOR AND THUS REQUIRES A SEPARATE BYPASS SYSTEM. CONTRACTOR SHALL COORDINATE WITH CITY OF TAMPA TO SIZE PUMP APPROPRIATELY. BYPASS SYSTEM SHALL INCLUDE A FULLY REDUNDANT BACKUP.
6. ALL LANDSCAPE DISTURBED DUE TO BYPASS INSTALLATION SHALL BE REPLACED IN KIND.
7. ROADWAY SHALL BE FULLY RESTORED AFTER BYPASS IS COMPLETE. REFER TO SHEET G-9 FOR RESTORATION DETAIL.
8. MAINTAIN ACCESS TO THE CITY PARKING LOT UNDER THE CROSSTOWN EXPRESSWAY AUTHORITY DURING CONSTRUCTION. BYPASS PIPE CAN EITHER BE BURIED ACROSS ENTRANCE LOCATED UNDER THE ASPHALT PAVEMENT OF ASHLEY ST. OR THE CONCRETE DRIVEWAY AND PARTIALLY PLACED WITH A STEEL RAMP ACROSS FOR CAR ACCESS AS SHOWN ON DETAIL PLAN SHEET G-9. AFTER REMOVAL OF THE BYPASS PUMPING SYSTEM, RESTORE TRENCH BACKFILL COMPACTED TO AT LEAST 98 PERCENT OF THE MODIFIED PROCTOR MAXIMUM DRY DENSITY (ASTM D-1557). REPLACE ASPHALT IN ACCORDANCE WITH THE TYPICAL PAVING DETAIL ON PLAN SHEET G-9 OR POUR 8" CONCRETE REINFORCED SLAB FOR DRIVEWAY, DEPENDING ON LOCATION CHOSEN BY THE CONTRACTOR AND APPROVED BY THE ENGINEER. REINFORCE 8-INCH SLAB WITH TWO MATS (TOP AND BOTTOM) OF #5 BARS @ 12" ON CENTER EACH WAY.
9. INSTALLATION OF HOT TAP SHALL BE A MINIMUM OF 3 FEET FROM NEAREST JOINT. CONTRACTOR TO FIELD VERIFY LOCATION OF JOINTS. LOCATIONS ON DRAWINGS ARE ESTIMATES. 3

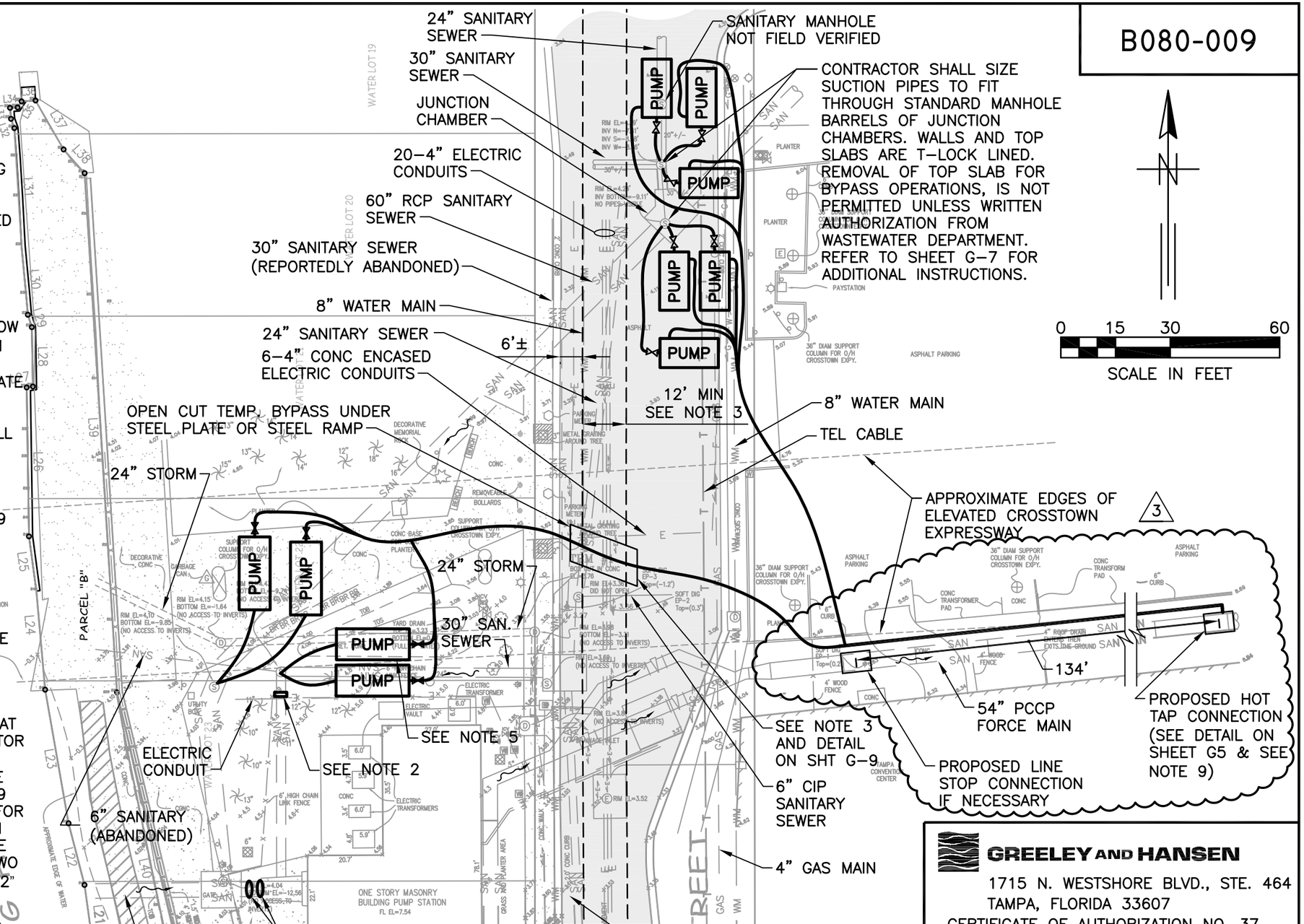

PLAN VIEW

SCALE: 1" = 30'

GREELEY AND HANSEN
1715 N. WESTSHORE BLVD., STE. 464
TAMPA, FLORIDA 33607
CERTIFICATE OF AUTHORIZATION NO. 37

P.E. NAME: FREDDY J. BETANCOURT P.E. NO. 68072

P.E. NAME:

Engineering Design Technologies Corp.
P.O. Box 152403
Tampa, FL 33684-2403
813.289.8080
813.282.9184 FAX
engineering@edt1.com

Certificate of Authorization Number: 4795

CITY of TAMPA
WASTEWATER DEPARTMENT

KRAUSE PS REHABILITATION

TEMPORARY BYPASS-CONCEPTUAL PLAN

NO.	DATE	REVISIONS
3	9/24/15	REV TAPPING LOCATION, ADD NOTE 9
2	1/27/	
1	7/11	

RED LINES

Revised G-6

DRAWN: J. WHITE
DESIGN: FJB
QC: DCH
DATE: 01/27/15

Sheet G-6A

G6, 10/7/2015 10:25:14 AM

B080-010

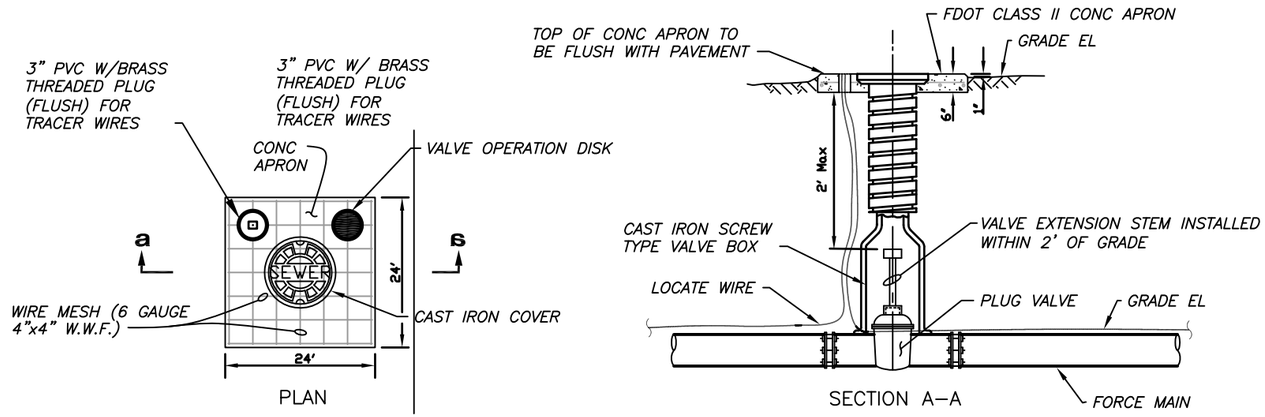

VALVE BOX DETAIL

NOT TO SCALE

IMPORTANT – FOR EACH OPERABLE VALVE

PROVIDE A BRASS IDENTIFICATION TAG ANCHORED TO THE CONCRETE APRON THAT IS A MINIMUM 2" IN DIAMETER AND 1/8–INCH THICK. THE TAG SHALL BE ENGRAVED WITH "SEWER", SIZE OF VALVE, TYPE OF VALVE, AND DIRECTION AND NUMBER OF TURNS TO OPEN.

FOR EXAMPLE, A 4–INCH PLUG VALVE ON A WASTEWATER FORCE MAIN THAT REQUIRES 1/4 TURNS TO THE LEFT (COUNTERCLOCKWISE) TO BE FULLY OPEN WOULD REQUIRE THE FOLLOWING IDENTIFICATION TAG.

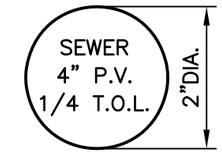

VALVE OPERATION DISK DETAIL

NOT TO SCALE

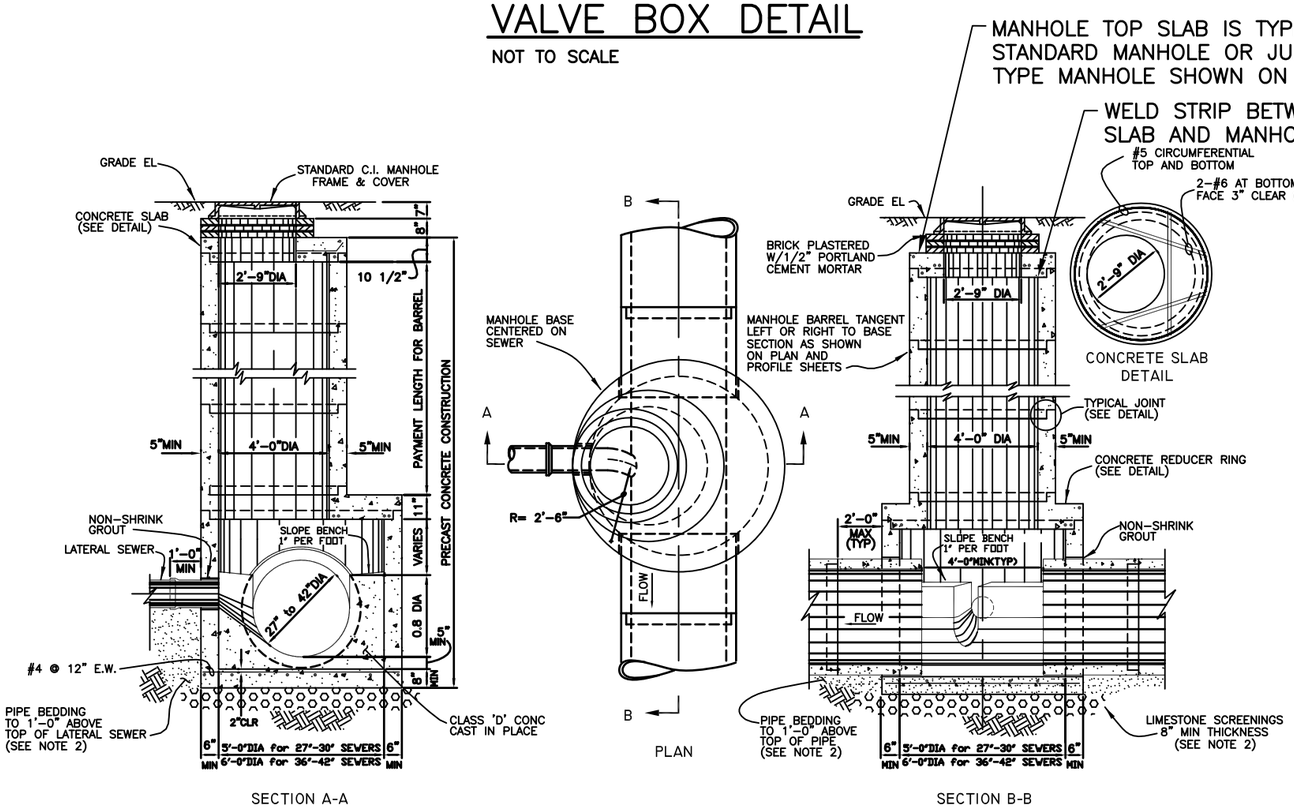

STANDARD MANHOLE – DEEP TYPE FOR SEWERS 27" THROUGH 42" IN DIAMETER

NOT TO SCALE

NOTES:

1. CONTRACTOR SHALL ONLY PROCEED TO REMOVE TOP SLAB IF WRITTEN AUTHORIZATION HAS BEEN PROVIDED BY THE CITY.
2. CONTRACTOR SHALL PROVIDE A SAFE ENVIRONMENT AND TAKE ALL NECESSARY PRECAUTIONS FOR HIS WORKERS TO PERFORM ANY WORK INSIDE MANHOLES. OSHA STANDARD SAFETY EQUIPMENT SUCH AS, BUT NOT LIMITED TO, SAFETY HARNESSES, GAS MONITORS, LOWER EXPLOSIVE LIMITS (LEL) DETECTORS, BREATHING APPARATUS, ETC SHALL BE UTILIZED WHERE WORK DICTATES THEIR USE.
3. MANHOLE TOP SLABS AND BARRELS ARE PLASTIC SHEET LINED. IF TOP SLAB IS REQUIRED TO BE REMOVED FOR BYPASS PUMPING, CONTRACTOR SHALL CUT LINER JUST BELOW WELD STRIP JOINT BETWEEN TOP SLAB AND BARREL. REPLACEMENT TOP SLAB SHALL BE T–LOK LINED, AND T–LOK JOINT BETWEEN TOP SLAB AND BARREL SHALL BE COVERED WITH 275 MILS OF CPP GEL (MANUFACTURED BY EPOXYTEC) BY A CERTIFIED APPLICATOR OR APPROVED EQUAL.

GREELEY AND HANSEN
1715 N. WESTSHORE BLVD., STE. 464
TAMPA, FLORIDA 33607
CERTIFICATE OF AUTHORIZATION NO. 37

P.E. NAME: FREDDY J. BETANCOURT P.E. NO. 68072
P.E. NAME:
DATE:

Engineering Design Technologies Corp.
P.O. Box 152403
Tampa, FL 33684-2403
813.289.8080
813.282.9184 FAX
engineering@edt1.com
Certificate of Authorization Number: 4795

CITY of TAMPA
WASTEWATER DEPARTMENT

KRAUSE PS REHABILITATION

STANDARD DETAILS

RED LINES

NO.	DA	
1	1/27	

NO CHANGES

DRAWN: J.WHITE
DESIGN: FJB
QC: DCH
DATE: 01/27/15

SHEET G-7

B080-011

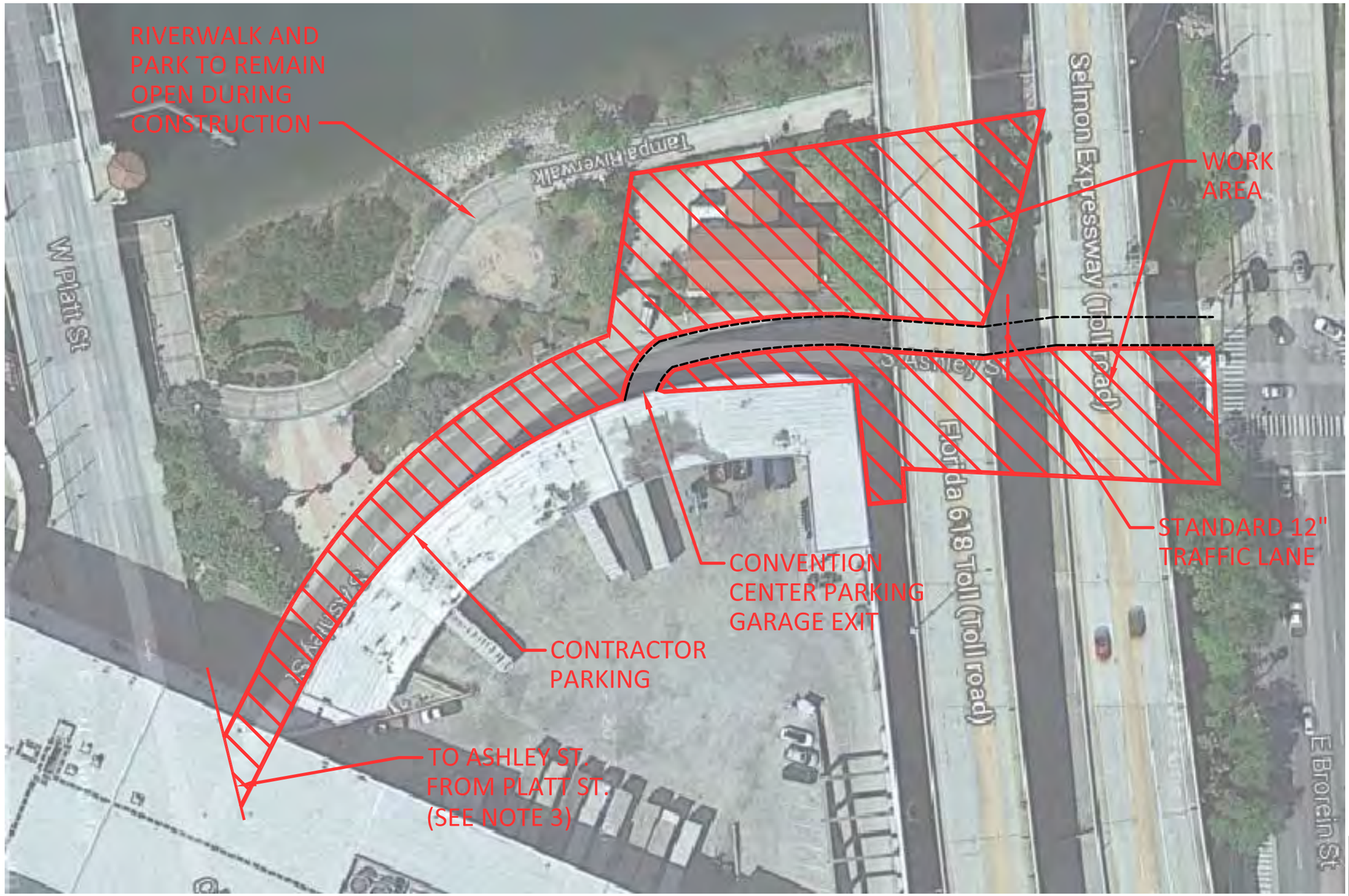

CONSTRUCTION AREA

NOT TO SCALE

NOTES:

1. CONTRACTOR SHALL ARRANGE A SECURE STAGING AREA NEAR THE SITE FOR ALL CONSTRUCTION EQUIPMENT AND REQUIRED MACHINERY.
2. CONTRACTOR SHALL PROVIDE DETAILED MOT PLAN TO BE SUBMITTED WITH ROW PERMIT APPLICATION TO THE CITY OF TAMPA.
3. ACCESS TO ASHLEY STREET FROM PLATT STREET SHALL BE CLOSED TO THE PUBLIC DURING CONSTRUCTION
4. CONTRACTOR SHALL SECURE THE PUMP STATION SITE, BYPASS PUMPING SYSTEM OR ANY TEMPORARY EQUIPMENT OR MATERIAL LAYOUT AREA WITH TEMPORARY PERIMETER SECURITY FENCES OF AT LEAST 6' OF HEIGHT.

GREELEY AND HANSEN
1715 N. WESTSHORE BLVD., STE. 464
TAMPA, FLORIDA 33607
CERTIFICATE OF AUTHORIZATION NO. 37

P.E. NAME: FREDDY J. BETANCOURT P.E. NO. 68072

P.E. NAME: _____
DATE: _____

EDT Engineering Design Technologies Corp.
P.O. Box 152403
Tampa, FL 33684-2403
813.289.8080
813.282.9184 FAX
engineering@edt1.com
Certificate of Authorization Number: 4795

CITY of TAMPA
WASTEWATER DEPARTMENT

KRAUSE PS REHABILITATION

CONCEPTUAL MAINTENANCE OF TRAFFIC

NO.	DATE	
1	1/27/1	CONTRACTED

RED LINES

NO CHANGES

DRAWN: J.WHITE
DESIGN: FJB
QC: DCH
DATE: 01/27/15

SHEET G-8

B080-012

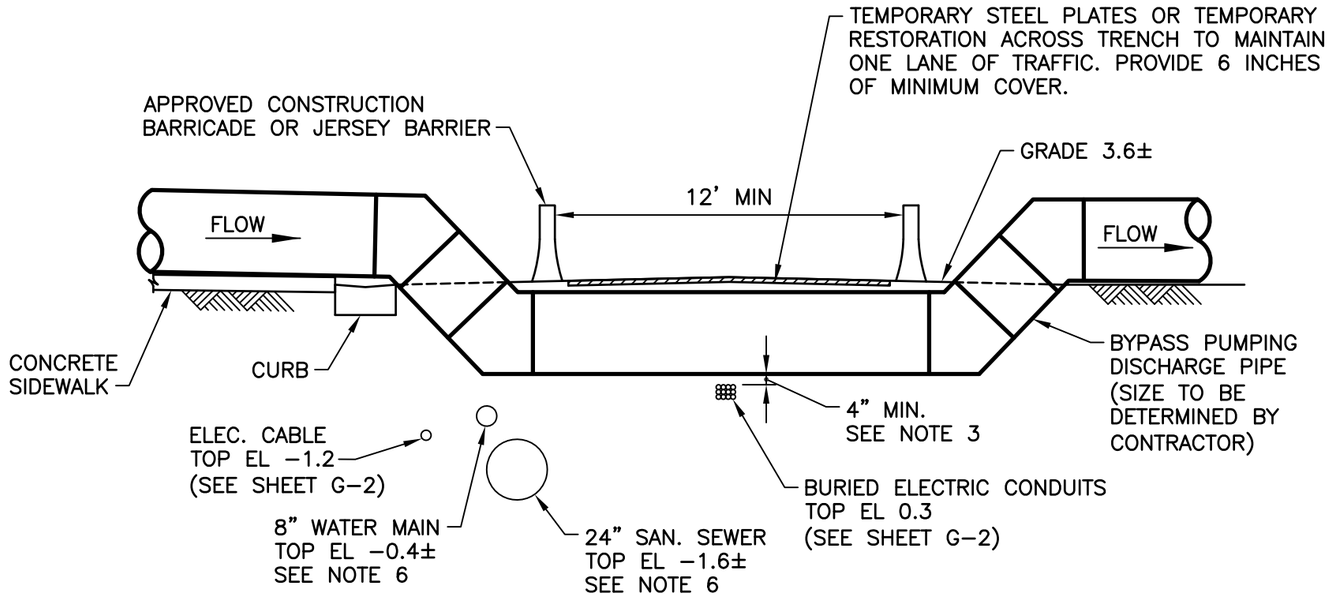

BURIED BYPASS PIPE DETAIL

NOT TO SCALE

NOTES:

1. CONTRACTOR SHALL PROVIDE THE CITY AT LEAST TWO WEEKS OF ADVANCED NOTICE PRIOR TO CLOSING LANES OF TRAFFIC FOR INSTALLATION OF BYPASS DISCHARGE PIPE ACROSS ASHLEY STREET.
2. CONTRACTOR SHALL INSTALL AT LEAST 18 FEET OF TEMPORARY PIPE UNDERGROUND AND SHALL EITHER PROVIDE TEMPORARY RESTORATION OR SECURE DRIVABLE STEEL PLATES SO THAT TRAFFIC CAN RESUME.
3. CONTRACTOR SHALL LOCATE IN ADVANCE THE CROSSING UTILITIES, AND SHALL EXERCISE CAUTION DURING INSTALLATION, PROVIDING PROTECTION TO OTHER UTILITIES AS NECESSARY. PROVIDE MIN. 4" CLEARANCE TO ALL UTILITIES.
4. BYPASS DISCHARGE PIPE SHALL BE DESIGNED TO MEET THE HYDRAULIC REQUIREMENTS OF THIS APPLICATION AND BE ABLE TO WITHSTAND THE TEMPORARY LOADINGS FROM TRAFFIC AND RESTORATION WITHOUT FAILING.
5. CONTRACTOR SHALL RESTORE PAVEMENT AS SHOWN ON DETAIL. CONTRACTOR SHALL ALSO RESTORE AND CURB, SIDEWALK OR OTHER INCIDENTAL ITEM DISTURBED IN KIND, TO ITS ORIGINAL CONDITION OR BETTER.
6. CONTRACTOR SHALL FIELD VERIFY ELEVATION OF THE CROSSING UTILITIES ALONG THE ALIGNMENT OF THE BYPASS PUMPING DISCHARGE PIPE.

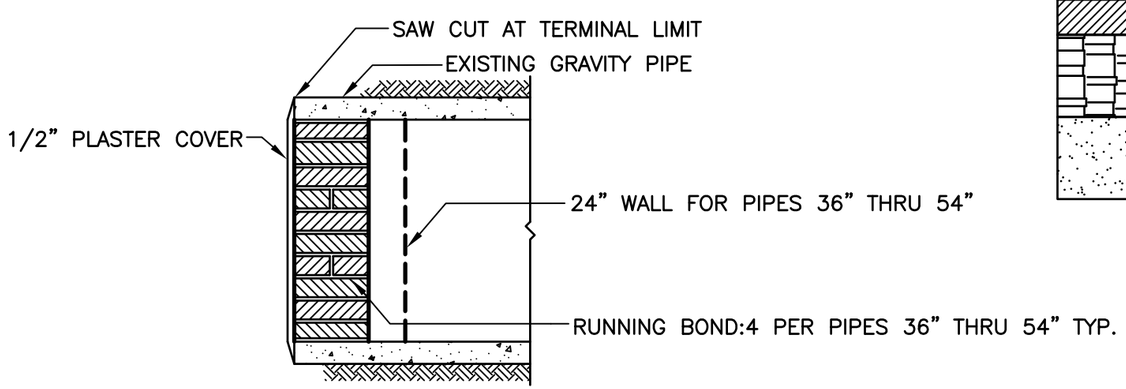

TYPICAL SECTION VIEW

NOTE:
1. BRICK SHALL CONFORM TO ASTM C32.
2. MASONRY CEMENT SHALL CONFORM TO ASTM C 91 AND C 270.

MASONRY BULKHEAD DETAIL

NOT TO SCALE

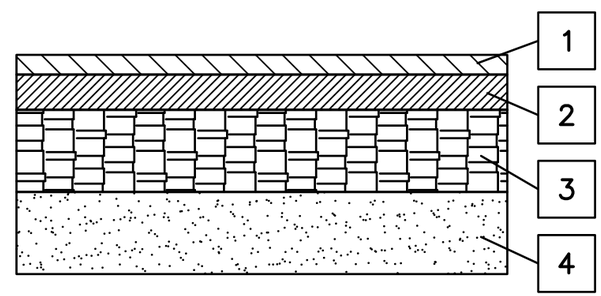

NOTES:

1. 1" MINIMUM THICKNESS, TYPE S−3 (FC−9.5) ASPHALTIC CONCRETE OVERLAY.
2. TYPE S−1 (SP−12.5) ASPHALTIC CONCRETE SURFACE COURSE 2" MIN. THICKNESS.
3. LIMEROCK OR CRUSHED CONCRETE BASE, 12" MIN. THICKNESS
4. 12" STABILIZED SUB−BASE (MINIMUM LAB−40) OR TRENCH BACKFILL COMPACTED TO AT LEAST 98 PERCENT MODIFIED PROCTOR MAXIMUM DRY DENSITY (ASTM D−1557).

TYPICAL PAVING SECTION

NOT TO SCALE

GREELEY AND HANSEN
1715 N. WESTSHORE BLVD., STE. 464
TAMPA, FLORIDA 33607
CERTIFICATE OF AUTHORIZATION NO. 37

P.E. NAME: FREDDY J. BETANCOURT P.E. NO. 68072
P.E. NAME:
DATE:

EDT Engineering Design Technologies Corp.
P.O. Box 152403
Tampa, FL 33684-2403
813.289.8080
813.282.9184 FAX
engineering@edt1.com
Certificate of Authorization Number: 4795

CITY of TAMPA
WASTEWATER DEPARTMENT

KRAUSE PS REHABILITATION

BYPASS AND MISCELLANEOUS DETAILS

NO.	DATE	CONTENT
1	1/27/	

RED LINES

NO CHANGES

DRAWN: J.WHITE
DESIGN: FJB
QC: DCH
DATE: 01/27/15

SHEET G-9

B080-013

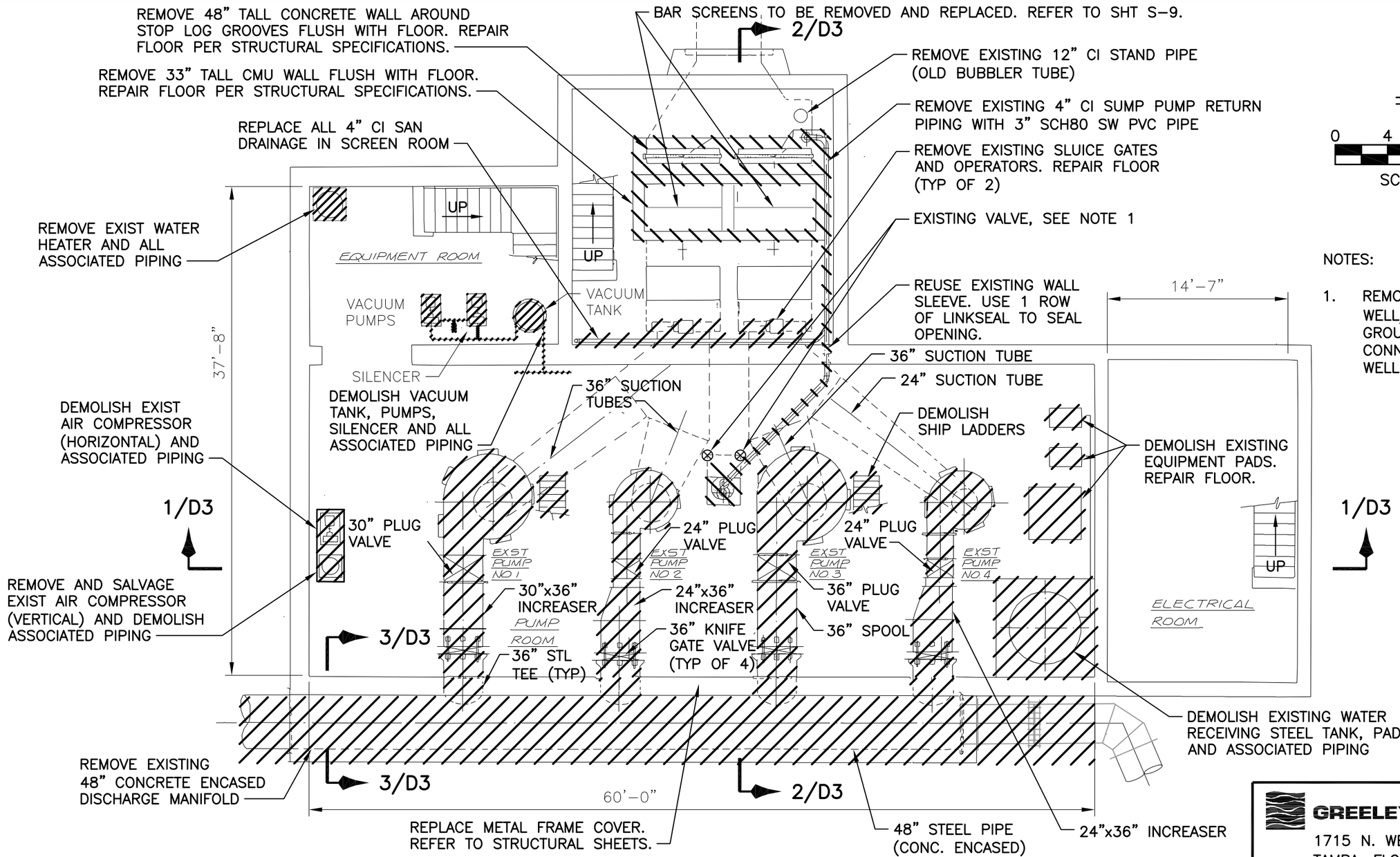

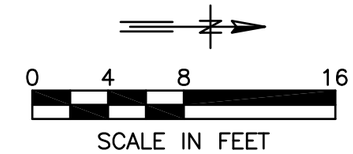

NOTES:

1. REMOVE EXISTING 6" WET WELL/SUMP BYPASS VALVES. GROUT OPENING TO ELIMINATE CONNECTION BETWEEN WET WELL AND SUMP.

LOWER LEVEL MECHANICAL DEMOLITION PLAN – FLR EL –5.99

SCALE: 1/8" = 1'-0"

LEGEND:

DENOTES AREA TO BE DEMOLISHED

GREELEY AND HANSEN
1715 N. WESTSHORE BLVD., STE. 464
TAMPA, FLORIDA 33607
CERTIFICATE OF AUTHORIZATION NO. 37

P.E. NAME: FREDDY J. BETANCOURT P.E. NO. 68072

P.E. NAME:
DATE:

Engineering Design Technologies Corp.
P.O. Box 152403
Tampa, FL 33684-2403
813.289.8080
813.282.9184 FAX
engineering@edt1.com
Certificate of Authorization Number: 4795

CITY of TAMPA
WASTEWATER DEPARTMENT

KRAUSE PS REHABILITATION

LOWER LEVEL MECHANICAL DEMOLITION PLAN

NO.	DATE	
1	1/27/15	CONFORMED

RED LINES

NO CHANGES

DRAWN: J.WHITE
DESIGN: FJB
QC: DCH
DATE: 01/27/15

SHEET D-1

B080-014

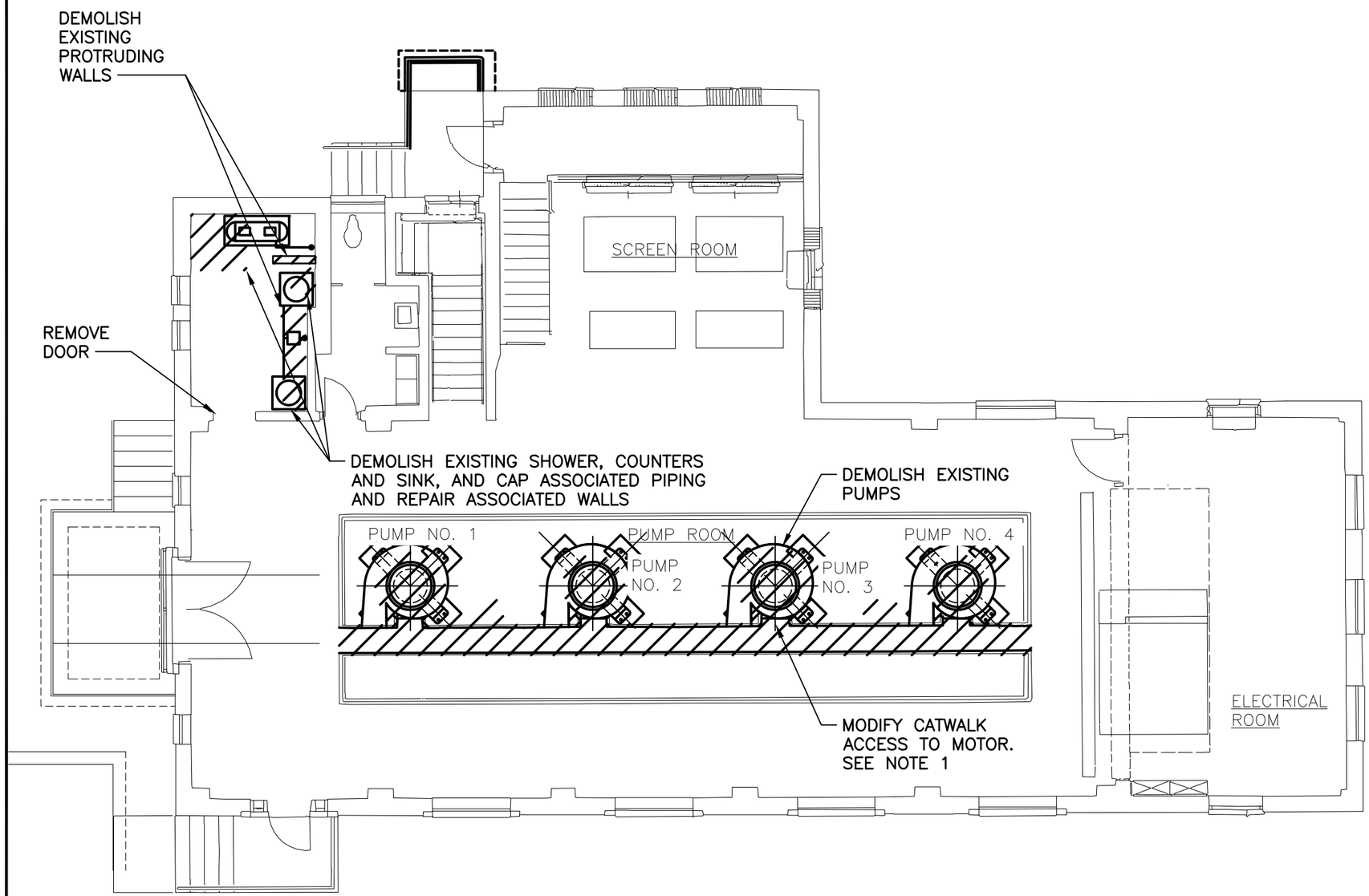

0 4 8 16
SCALE IN FEET

UPPER LEVEL MECHANICAL DEMOLITION PLAN

SCALE: 1/8" = 1'-0"

NOTES:

1. COORDINATE THIS SHEET WITH SHEET M-2 AND STRUCTURAL SHEET FOR NEW MOTOR LOCATION AND CATWALK MODIFICATIONS.

LEGEND:

DENOTES AREA TO BE DEMOLISHED

GREELEY AND HANSEN
1715 N. WESTSHORE BLVD., STE. 464
TAMPA, FLORIDA 33607
CERTIFICATE OF AUTHORIZATION NO. 37

P.E. NAME: FREDDY J. BETANCOURT P.E. NO. 68072
P.E. NAME:
DATE:

Engineering Design Technologies Corp.
P.O. Box 152403
Tampa, FL 33684-2403
813.289.8080
813.282.9184 FAX
engineering@edt1.com
Certificate of Authorization Number: 4795

CITY of TAMPA
WASTEWATER DEPARTMENT

KRAUSE PS REHABILITATION

UPPER LEVEL MECHANICAL DEMOLITION PLAN

NO.	DATE	CONTENTS
1	1/27/	

RED LINES
NO CHANGES

DRAWN: J.WHITE
DESIGN: FJB
QC: DCH
DATE: 01/27/15

SHEET D-2

B080-015

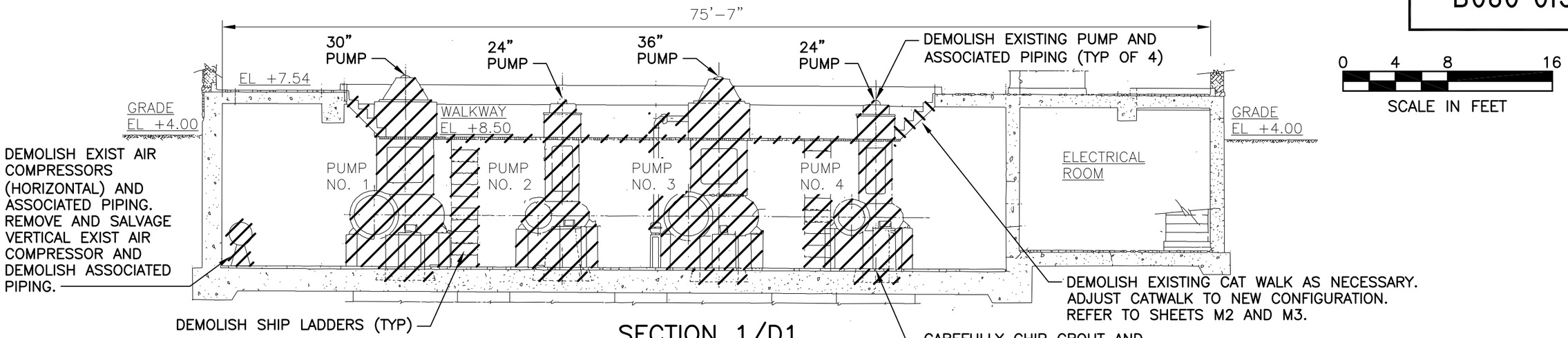

0 4 8 16
SCALE IN FEET

SECTION 1/D1

SCALE: 1/8" = 1'-0"

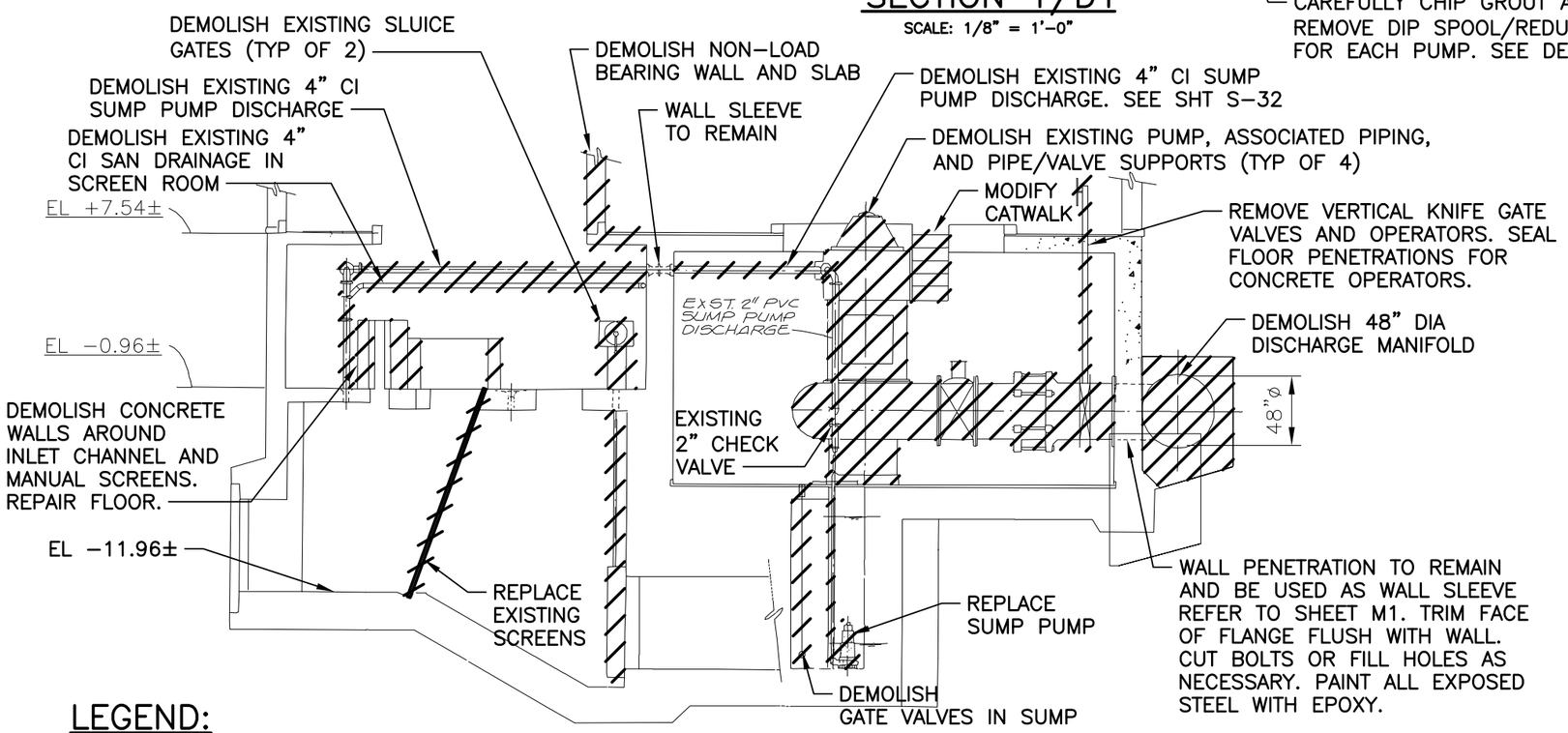

SECTION 2/D1

SCALE: 1/8" = 1'-0"

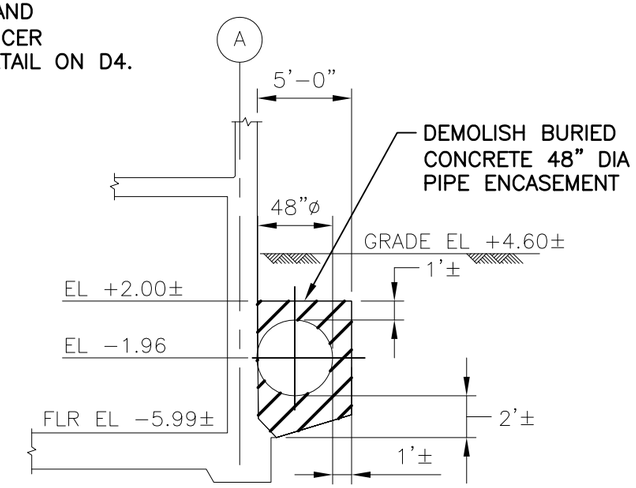

SECTION 3/D1

SCALE: 1/8" = 1'-0"

LEGEND:

DENOTES AREA TO BE DEMOLISHED

GREELEY AND HANSEN
1715 N. WESTSHORE BLVD., STE. 464
TAMPA, FLORIDA 33607
CERTIFICATE OF AUTHORIZATION NO. 37

P.E. NAME: FREDDY J. BETANCOURT P.E. NO. 68072
P.E. NAME:
DATE:

Engineering Design Technologies Corp.
P.O. Box 152403
Tampa, FL 33684-2403
813.289.8080
813.282.9184 FAX
engineering@edt1.com
Certificate of Authorization Number: 4795

CITY of TAMPA
WASTEWATER DEPARTMENT

KRAUSE PS REHABILITATION

MECHANICAL DEMOLITION SECTIONS

NO.	DATE	
1	1/27/15	CONFORMED

RED LINES
NO CHANGES

DRAWN: J.WHITE
DESIGN: FJB
QC: DCH
DATE: 01/27/15

SHEET D-3

B080-016

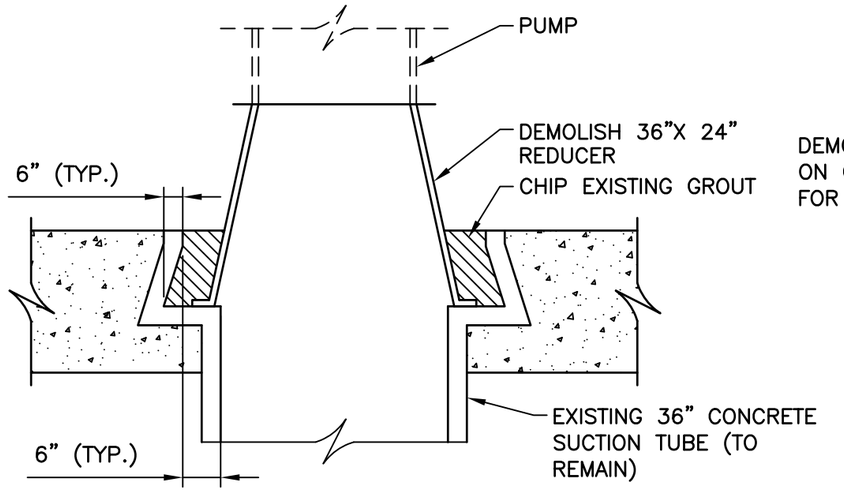

36" SUCTION TUBE DETAIL FOR PUMPS 1 & 2

NOT TO SCALE

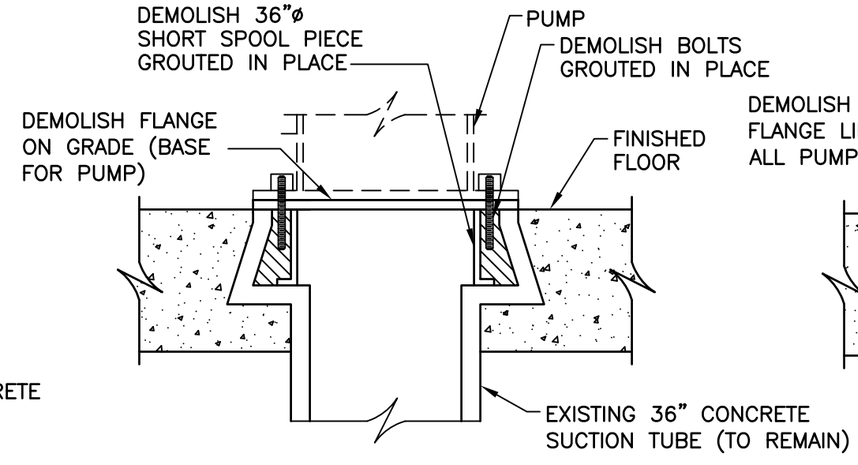

36" SUCTION TUBE DETAIL FOR PUMP NO. 3

NOT TO SCALE

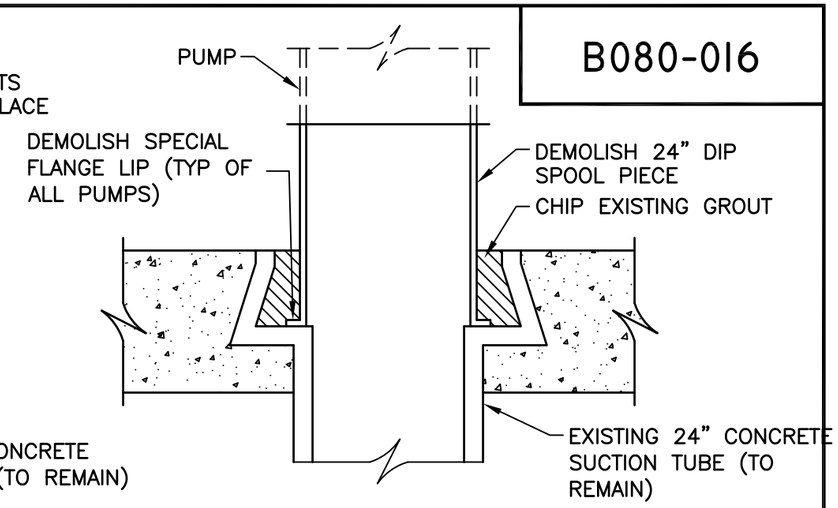

24" SUCTION TUBE DETAIL FOR PUMP NO. 4

NOT TO SCALE

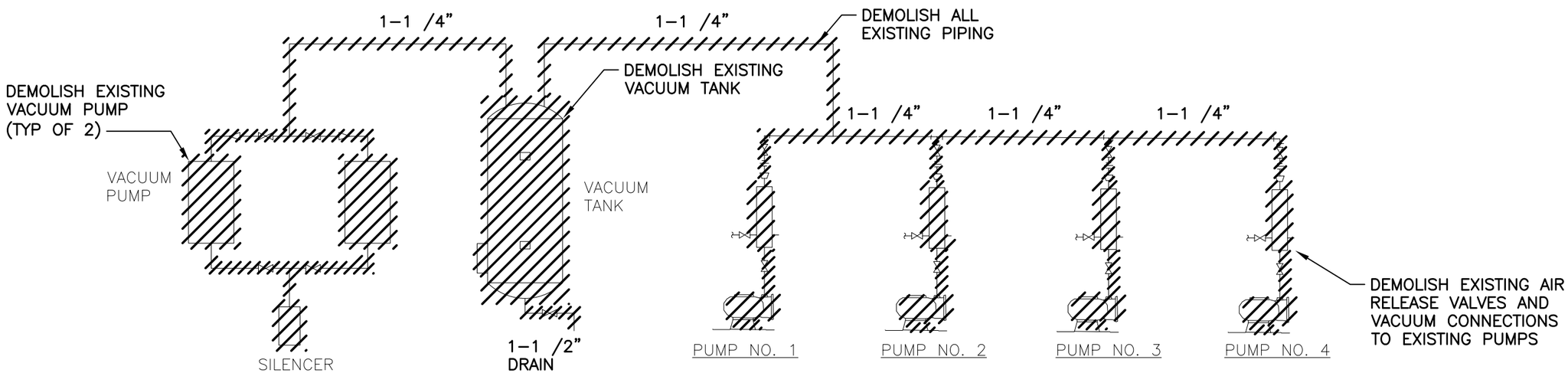

LEGEND:

DENOTES AREA TO BE DEMOLISHED

GREELEY AND HANSEN
1715 N. WESTSHORE BLVD., STE. 464
TAMPA, FLORIDA 33607
CERTIFICATE OF AUTHORIZATION NO. 37

P.E. NAME: FREDDY J. BETANCOURT P.E. NO. 68072

P.E. NAME:
DATE:

Engineering Design Technologies Corp.
P.O. Box 152403
Tampa, FL 33684-2403
813.289.8080
813.282.9184 FAX
engineering@edt1.com
Certificate of Authorization Number: 4795

CITY of TAMPA
WASTEWATER DEPARTMENT

KRAUSE PS REHABILITATION

WATER, AIR AND PRIMING SYSTEM DIAGRAMS

NO.	DATE	
1	1/27/15	CONFORMED

RED LINES

NO CHANGES

DRAWN: J.WHITE
DESIGN: FJB
QC: DCH
DATE: 01/27/15

SHEET D-4

B080-017

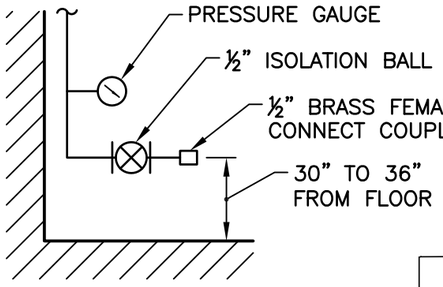

AIR VALVE CONNECTION DETAIL

NOT TO SCALE

STEEL INCREASER DETAIL

NOT TO SCALE

* DISTANCE TO BE FIELD VERIFIED AND COORDINATED WITH PUMP SUPPLIER. CONTRACTOR SHALL PROVIDE A LIST OF FIELD MEASURED DISTANCES AND CORRESPONDING INCREASER DESIGN DIMENSIONS PER AWWA C208, FOR EACH PUMP, AS PART OF THE SHOP DRAWINGS FOR STEEL INCREASERS.

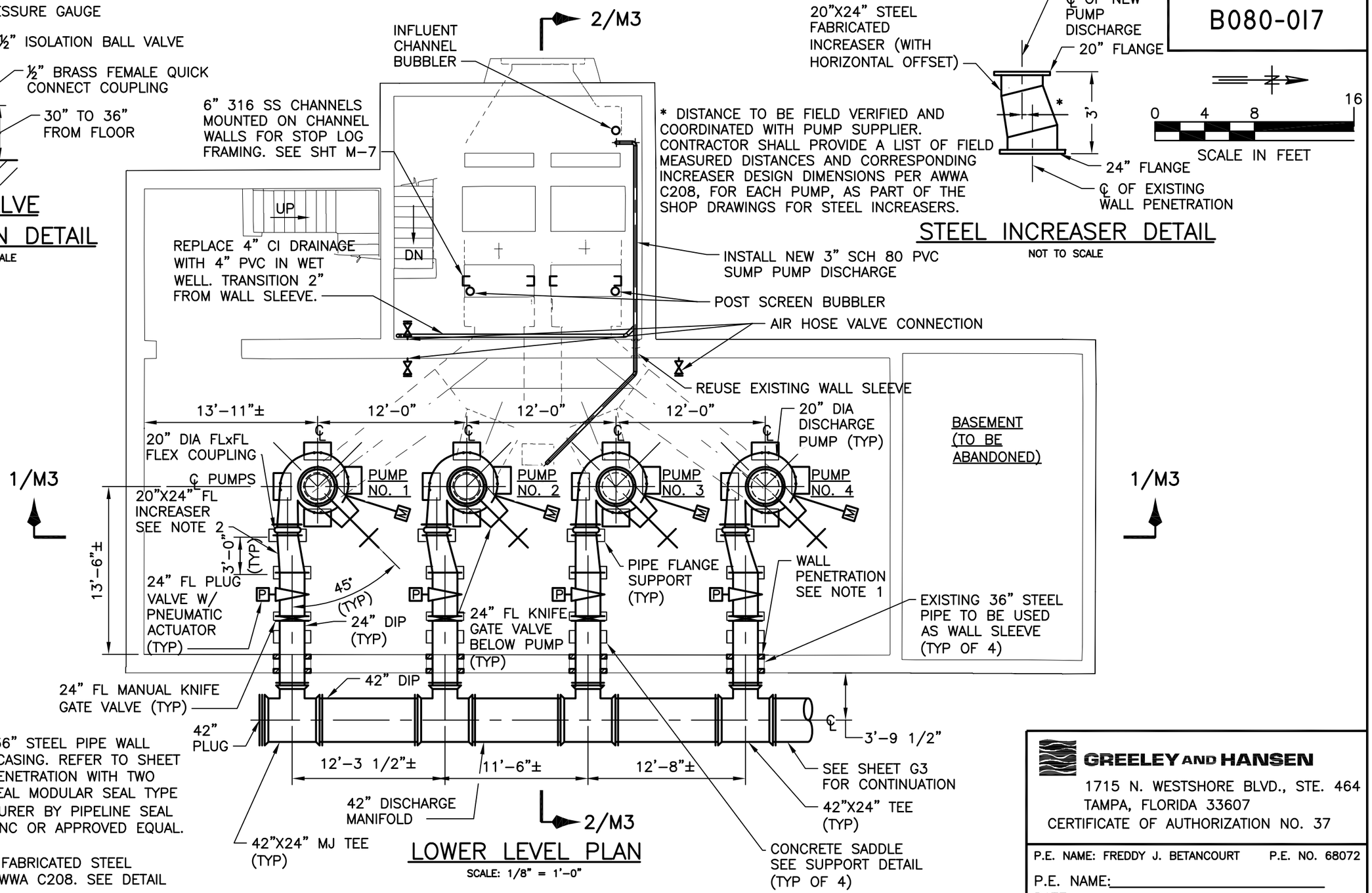

LOWER LEVEL PLAN

SCALE: 1/8" = 1'-0"

NOTES:

1. REUSE EXISTING 36" STEEL PIPE WALL PENETRATION AS CASING. REFER TO SHEET D3. SEAL WALL PENETRATION WITH TWO ROWS OF LINK-SEAL MODULAR SEAL TYPE "C" AS MANUFACTURER BY PIPELINE SEAL AND INSULATOR, INC OR APPROVED EQUAL.
2. 20"X24" CUSTOM FABRICATED STEEL INCREASER PER AWWA C208. SEE DETAIL ON THIS SHEET.

GREELEY AND HANSEN
1715 N. WESTSHORE BLVD., STE. 464
TAMPA, FLORIDA 33607
CERTIFICATE OF AUTHORIZATION NO. 37

P.E. NAME: FREDDY J. BETANCOURT P.E. NO. 68072
P.E. NAME:
DATE:

Engineering Design Technologies Corp.
P.O. Box 152403
Tampa, FL 33684-2403
813.289.8080
813.282.9184 FAX
engineering@edt1.com
Certificate of Authorization Number: 4795

CITY of TAMPA
WASTEWATER DEPARTMENT

KRAUSE PS REHABILITATION

LOWER LEVEL PLAN

NO.	DAT	
1	1/27/15	CONFORMED

RED LINES
NO CHANGES

DRAWN: J.WHITE
DESIGN: FJB
QC: DCH
DATE: 01/27/15

SHEET M-1

B080-018

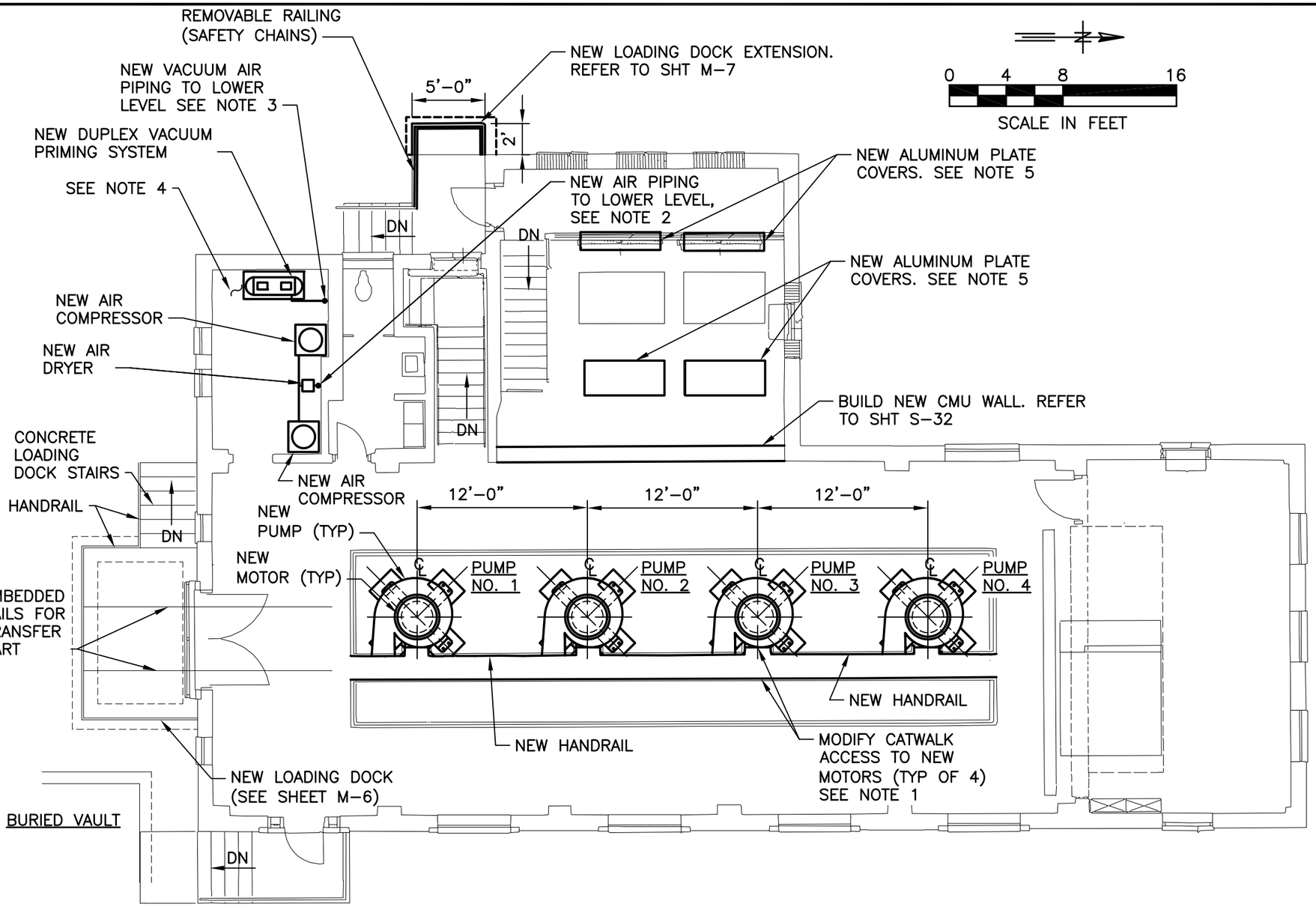

UPPER LEVEL PLAN

SCALE: 1/8" = 1'-0"

NOTES:

1. MODIFY CATWALK EXTENSIONS TO NEW MOTORS. CATWALK EDGE TO BE 9-INCHES CLEAR OF MOTOR FRAME. COORDINATE WITH MOTOR MANUFACTURER. PROPOSED CATWALK TO BE LEVEL AT ELEVATION 7.54 (TO MATCH EXISTING FLOOR ELEVATION). SUPPORT COLUMNS AND HANDRAILS TO BE REPLACED. SEE SHT S-34.
2. FIELD ROUTE NEW AIR PIPING TO EACH NEW PNEUMATIC PLUG VALVE ACTUATOR. PIPING SHALL PENETRATE FLOOR SLAB TO LOWER LEVEL AND SHALL BE ROUTED SUSPENDED FROM FLOOR SLAB WITH PIPE HANGERS.
3. FIELD ROUTE NEW VACUUM PIPING TO EACH NEW PUMP ASSEMBLY. PIPE SHALL PENETRATE FLOOR SLAB TO LOWER LEVEL AND SHALL BE ROUTED SUSPENDED FROM FLOOR SLAB WITH PIPE HANGERS.
4. NEW AIR COMPRESSORS, VACUUM PUMPS AND AIR DRYER SHALL HAVE ALL ELECTRICAL COMPONENTS ABOVE ELEVATION +10.0'. INSTALL MECHANICAL EQUIPMENT PADS AS SHOWN ON SHEET S-33. IF REQUIRED RAISE ELEVATION OF EQUIPMENT WITH STANDS.
5. CONSTRUCT NEW 1/2" ALUMINUM CHECKERED PLATE, ASTM B209 -07, NON-SLIP DIAMOND PATTERN, MINIMUM YIELD STRENGTH FY= 35 KSI. FOLLOW DETAIL PROVIDED FOR SUMP PUMP COVER ON SHEET S-33.

GREELEY AND HANSEN
1715 N. WESTSHORE BLVD., STE. 464
TAMPA, FLORIDA 33607
CERTIFICATE OF AUTHORIZATION NO. 37

P.E. NAME: FREDDY J. BETANCOURT P.E. NO. 68072
P.E. NAME:
DATE:

Engineering Design Technologies Corp.
P.O. Box 152403
Tampa, FL 33684-2403
813.289.8080
813.282.9184 FAX
engineering@edt1.com
Certificate of Authorization Number: 4795

CITY of TAMPA
WASTEWATER DEPARTMENT

KRAUSE PS REHABILITATION

UPPER LEVEL PLAN

NO.	DATE	
1	1/27/15	CONFORMED

RED LINES

NO CHANGES

DRAWN: J.WHITE
DESIGN: FJB
QC: DCH
DATE: 01/27/15

SHEET M-2

B080-019

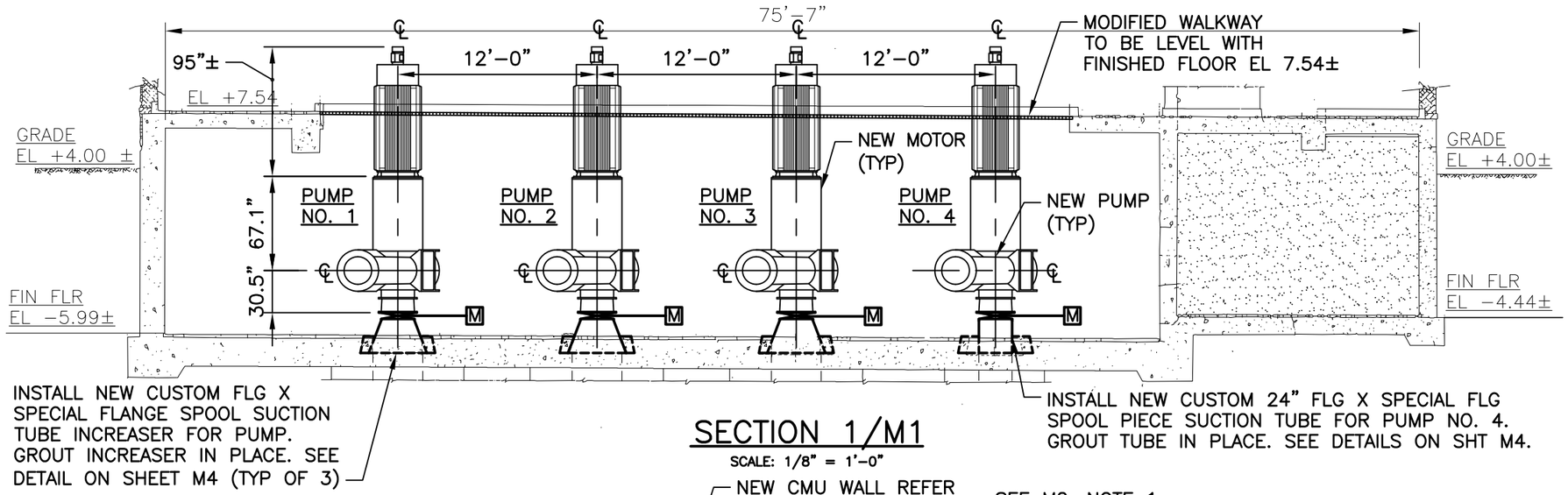

SECTION 1/M1

SCALE: 1/8" = 1'-0"

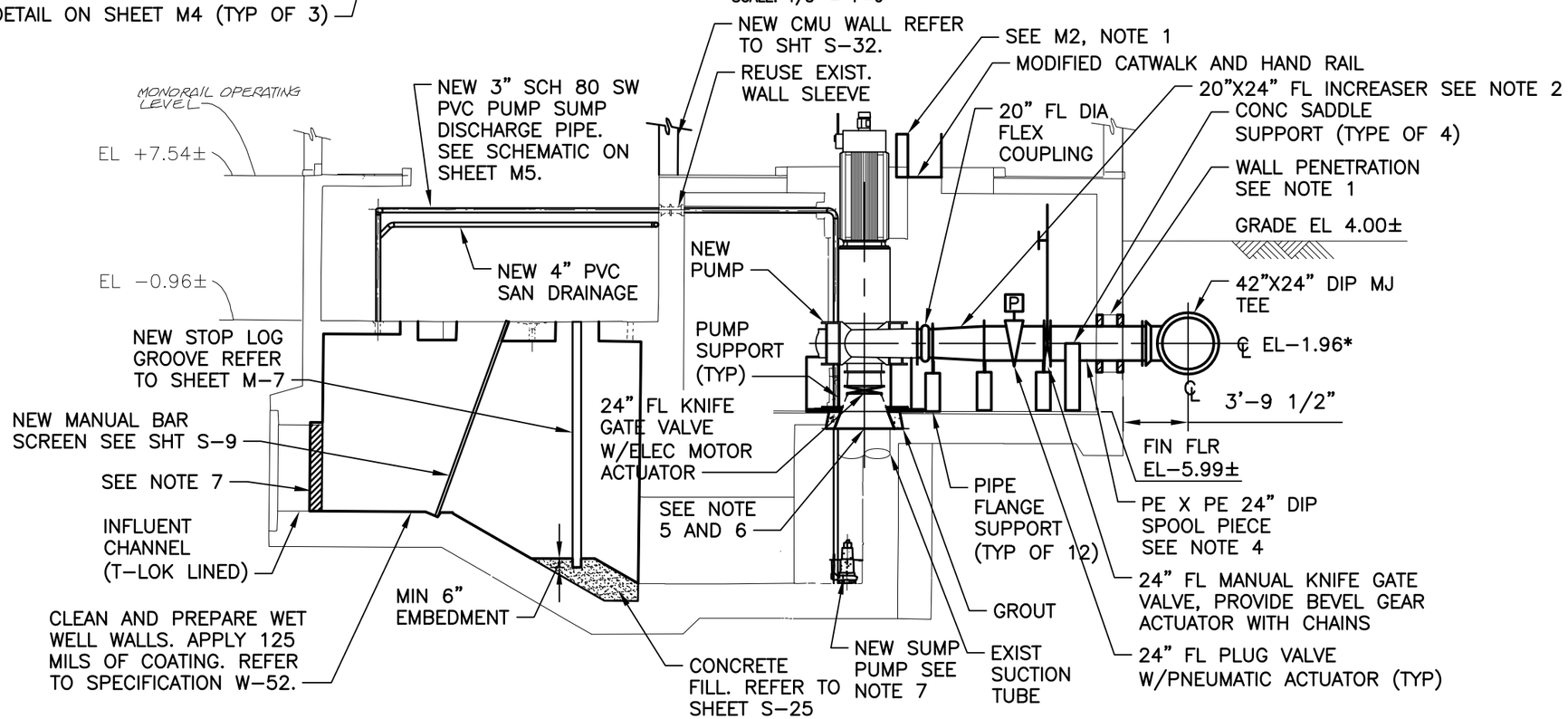

SECTION 2/M1

SCALE: 1/8" = 1'-0"

NOTES:

1. REUSE EXISTING WALL PENETRATION. SEAL WALL PENETRATION WITH TWO NEW ROWS OF LINK-SEAL MODULAR SEAL TYPE "C" AS MANUFACTURER BY PIPELINE SEAL AND INSULATOR, INC OR APPROVED EQUAL.
2. 20"X24" CUSTOM FABRICATED STEEL INCREASER. SEE DETAIL ON SHEET M-1
3. *CL TO BE ADJUSTED BASED ON EXISTING WALL PENETRATIONS.
4. PE X PE DIP SPOOL PIECE TO BE CUT TO SUIT IN FIELD. LENGTH TO BE DETERMINED PER ACTUAL LAY LENGTH OF OTHER COMPONENTS SHOWN. CONNECT THE SPOOL PIECE WITH THE KNIFE GATE VALVE BY USING A RESTRAINED FLANGE ADAPTER, MEGA FLANGE AS MANUFACTURED BY EBAA IRON INC. OR APPROVED EQUAL.
5. REPLACE EXISTING SUMP PUMP COVER WITH 1/2" THICK CHECKERED PLATE. SEE SHT S-33.
6. PROVIDE NEW STAINLESS STEEL CONNECTION HARDWARE FOR REDUCER TO SUCTION PIPE ASSEMBLY.
7. COAT A MINIMUM OF 6-INCHES OF OVERLAP ON THE T-LOK LINED INFLUENT CHANNEL.
8. PROVIDE SUBMERSIBLE, SINGLE SEAL, FLOOR MOUNTED, 1/2 HP WASTEWATER SUMP PUMP MODEL NO. 1411, AS MANUFACTURED BY WEIL PUMP COMPANY OR APPROVED EQUAL.

GREELEY AND HANSEN
1715 N. WESTSHORE BLVD., STE. 464
TAMPA, FLORIDA 33607
CERTIFICATE OF AUTHORIZATION NO. 37

P.E. NAME: FREDDY J. BETANCOURT P.E. NO. 68072
P.E. NAME:
DATE:

Engineering Design Technologies Corp.
P.O. Box 152403
Tampa, FL 33684-2403
813.289.8080
813.282.9184 FAX
engineering@edt1.com
Certificate of Authorization Number: 4795

CITY of TAMPA
WASTEWATER DEPARTMENT

KRAUSE PS REHABILITATION

SECTIONS AND DETAILS

RED LINES

NO. 1 1/ D NO CHANGES

DRAWN: J.WHITE
DESIGN: FJB
QC: DCH
DATE: 01/27/15

SHEET M-3

B080-020

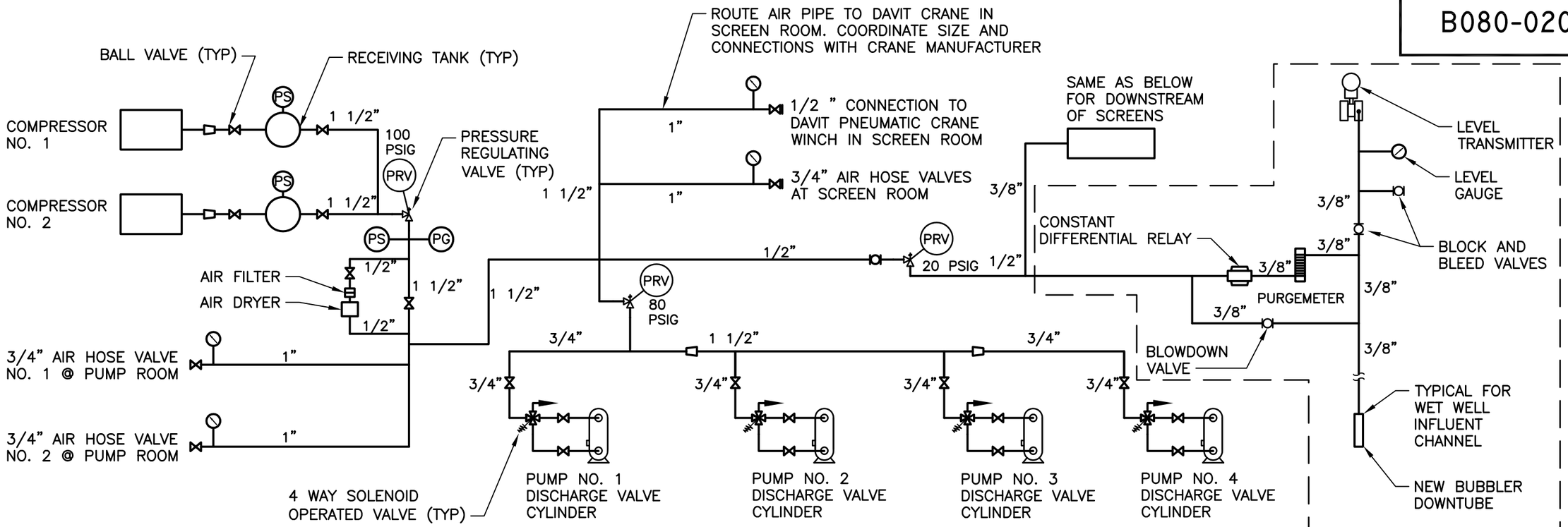

NEW AIR PIPING SCHEMATIC DIAGRAM

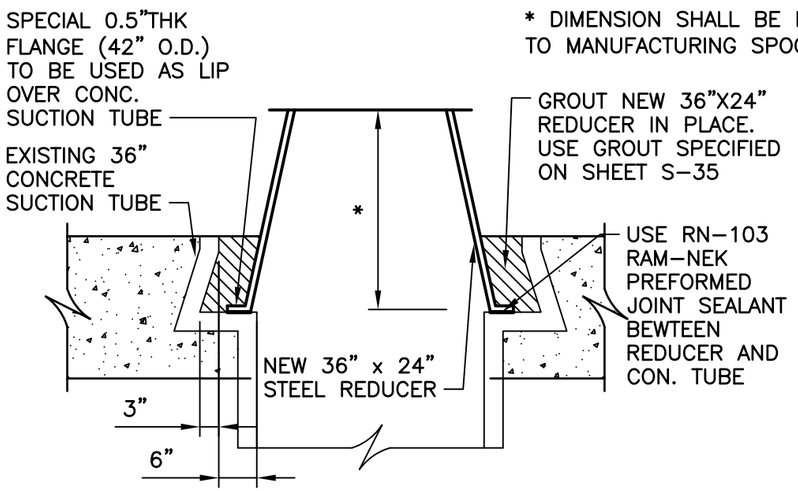

NEW SUCTION TUBE DETAIL FOR PUMPS 1, 2 & 3

NOT TO SCALE

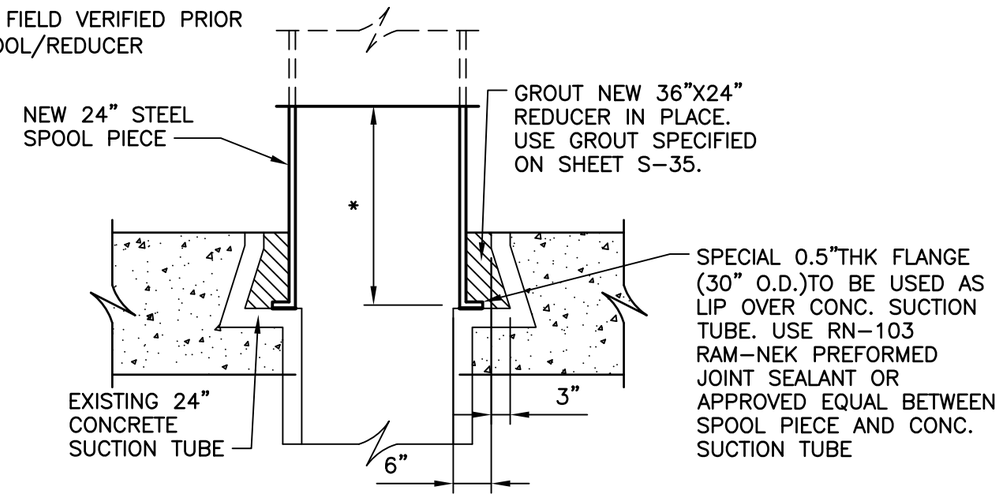

NEW SUCTION TUBE DETAIL FOR PUMP 4

NOT TO SCALE

NOTES:

1. REFER TO SPECIFICATIONS FOR APPROVED PIPE HANGER SYSTEMS. INSTALL NUMBER OF PIPE HANGERS AS REQUIRED. QUANTITY AND SPACING OF HANGER SHALL BE AS RECOMMENDED BY MANUFACTURER.

GREELEY AND HANSEN
1715 N. WESTSHORE BLVD., STE. 464
TAMPA, FLORIDA 33607
CERTIFICATE OF AUTHORIZATION NO. 37

P.E. NAME: FREDDY J. BETANCOURT P.E. NO. 68072

P.E. NAME:
DATE:

Engineering Design Technologies Corp.
P.O. Box 152403
Tampa, FL 33684-2403
813.289.8080
813.282.9184 FAX
engineering@edt1.com
Certificate of Authorization Number: 4795

CITY of TAMPA
WASTEWATER DEPARTMENT

KRAUSE PS REHABILITATION

NEW AIR PIPING DIAGRAMS AND NEW SUCTION TUBE DETAILS

RED LINES

NO.	DAT	
1	7/3/14	REV. 4 ADDED CONNECTION FOR CRANE

NO CHANGES

DRAWN: J. WHITE
DESIGN: FJB
QC: DCH
DATE: 01/27/15

SHEET M-4

B080-021

NOTES:

1. REFER TO SPECIFICATIONS FOR APPROVED PIPE HANGER SYSTEMS. INSTALL NUMBER OF PIPE HANGERS AS REQUIRED. QUANTITY AND SPACING OF HANGER SHALL BE AS RECOMMENDED BY MANUFACTURER.

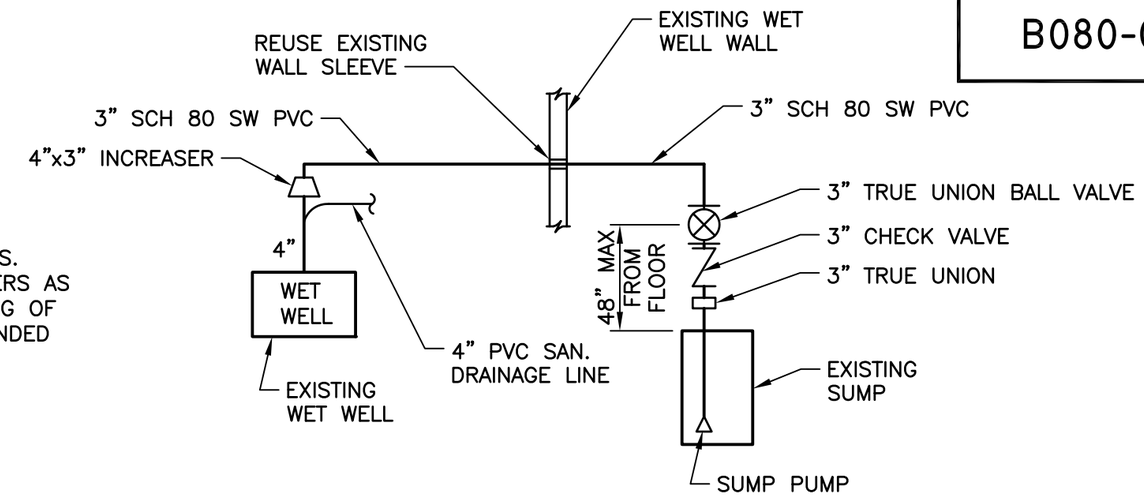

SUMP PUMP RETURN SCHEMATIC DIAGRAM

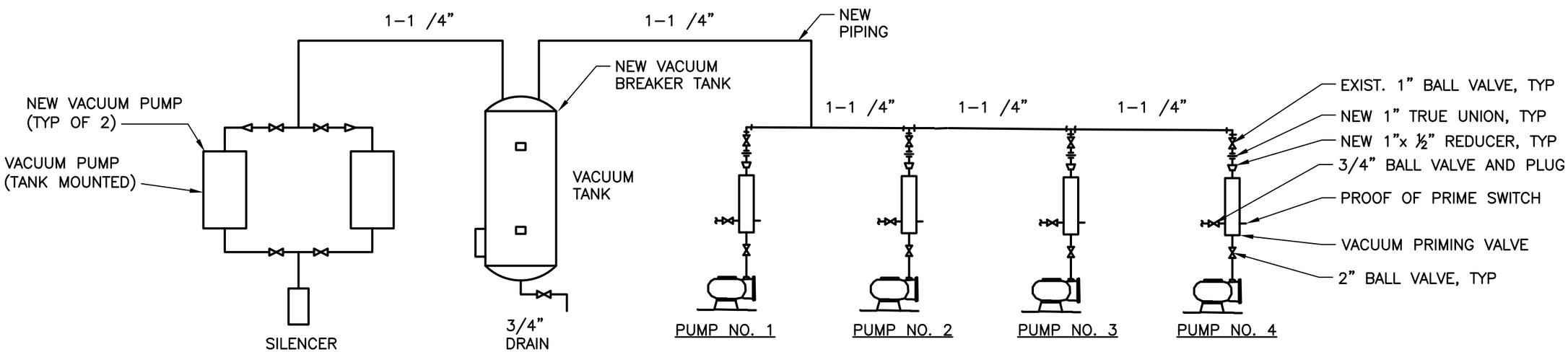

VACUUM SYSTEM SCHEMTAIC DIAGRAM

GREELEY AND HANSEN
1715 N. WESTSHORE BLVD., STE. 464
TAMPA, FLORIDA 33607
CERTIFICATE OF AUTHORIZATION NO. 37

P.E. NAME: FREDDY J. BETANCOURT P.E. NO. 68072

P.E. NAME:
DATE:

Engineering Design Technologies Corp.
P.O. Box 152403
Tampa, FL 33684-2403
813.289.8080
813.282.9184 FAX
engineering@edt1.com
Certificate of Authorization Number: 4795

CITY of TAMPA
WASTEWATER DEPARTMENT

KRAUSE PS REHABILITATION

AIR VACUUM PRIMING SYSTEM AND SUMP PUMP DIAGRAMS

RED LINES

NO.	DATE
1	1/27/

NO CHANGES

DRAWN: J. WHITE
DESIGN: FJB
QC: DCH
DATE: 01/27/15

SHEET M-5

B080-022

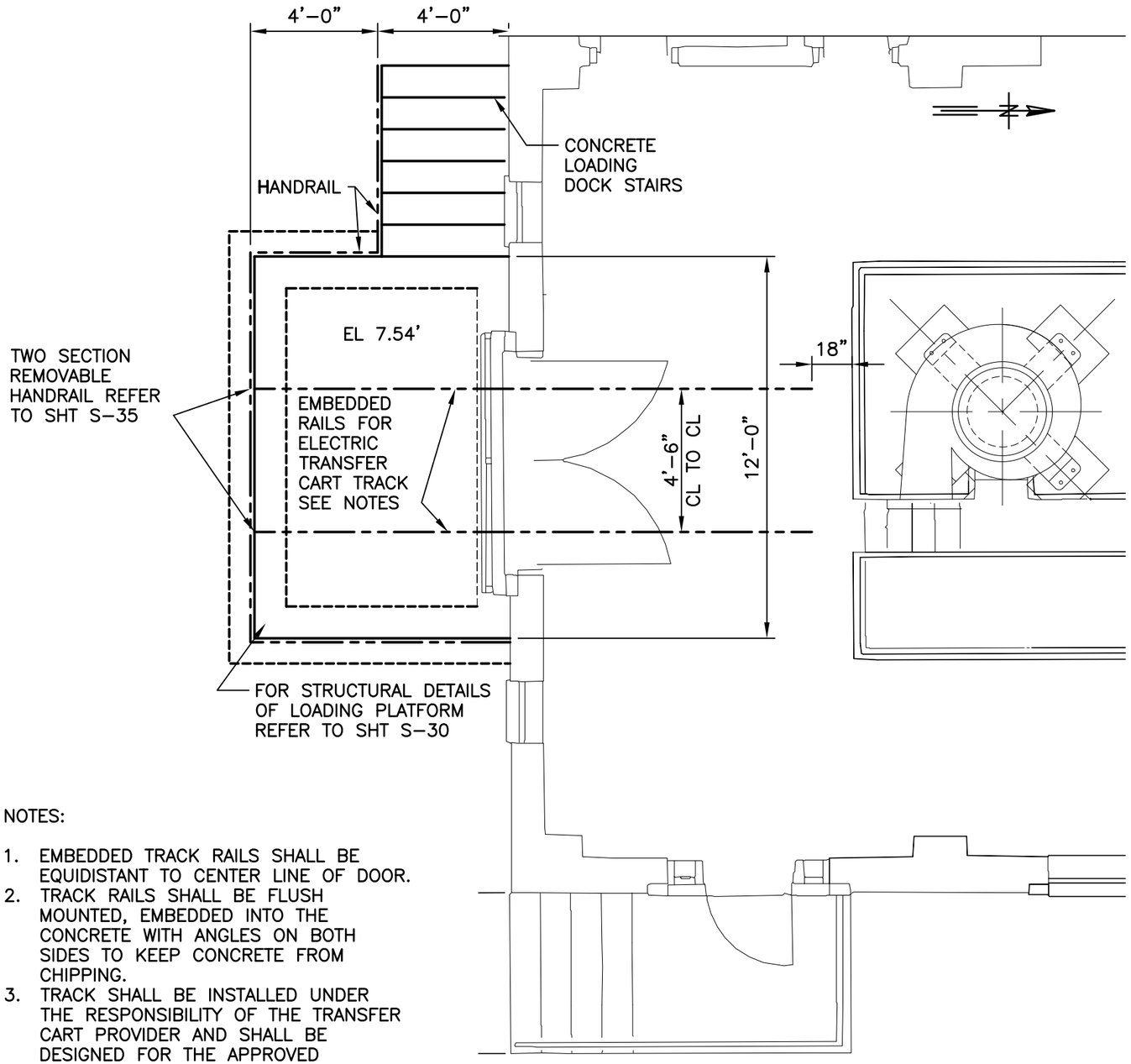

LOADING PLATFORM

UPPER LEVEL PLAN – FLR EL 7.54

SCALE: 1/4" = 1'-0"

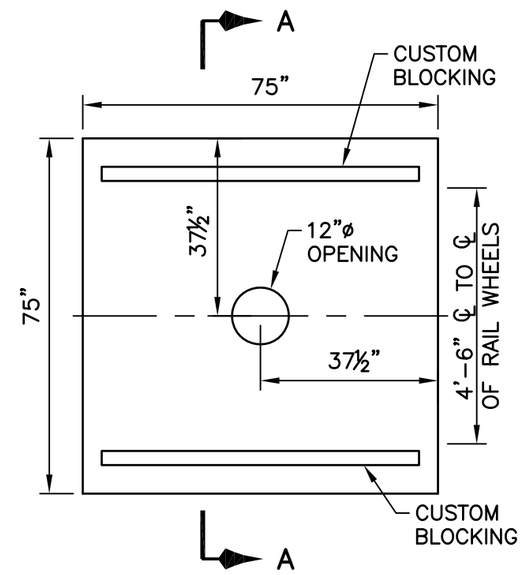

PLAN VIEW

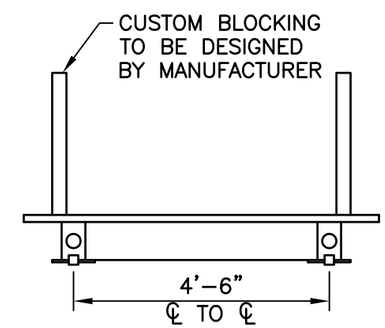

SECTION A

TRANSFER CART DETAILS

SCALE: 1/4" = 1'-0"

NOTES:

1. PROVIDE A SOLID TOP, ELECTRICALLY ASSISTED TRANSFER CART FOR A CAPACITY OF 6.5 TONS.
2. PROVIDE SUITABLE EMBEDDED TRACK RAIL SYSTEM DESIGNED FOR ELECTRICALLY ASSISTED TRANSFER CART. INSTALLATION OF TRACKS SHALL BE RESPONSIBILITY OF TRANSFER CART MANUFACTURER.
3. PROVIDE A 12" DIAMETER OPENING IN CENTER OF SOLID TOP. CART HEIGHT SHALL NOT EXCEED 12 INCHES. IF DESIGN REQUIRES CART HEIGHT HIGHER THAN 12 INCHES, THEN MANUFACTURER SHALL COORDINATE WITH PUMP SUPPLIER AND FIELD DIMENSIONS SO THAT IMMERSIBLE MOTORS CLEAR THE EXISTING DOORWAY.
4. PROVIDE CUSTOM BLOCKING DESIGNED BY TRANSFER CART MANUFACTURER IN COORDINATION WITH PUMP SUPPLIER. PROVIDE BLOCKING SUITABLE TO UPHOLD PROPOSED PUMPS AND IMMERSIBLE MOTORS.

NOTES:

1. EMBEDDED TRACK RAILS SHALL BE EQUIDISTANT TO CENTER LINE OF DOOR.
2. TRACK RAILS SHALL BE FLUSH MOUNTED, EMBEDDED INTO THE CONCRETE WITH ANGLES ON BOTH SIDES TO KEEP CONCRETE FROM CHIPPING.
3. TRACK SHALL BE INSTALLED UNDER THE RESPONSIBILITY OF THE TRANSFER CART PROVIDER AND SHALL BE DESIGNED FOR THE APPROVED TRANSFER CART AND EXPECTED LOADS. EQUIPMENT LOADING PLATFORM UPPER LEVEL PLAN.

GREELEY AND HANSEN
1715 N. WESTSHORE BLVD., STE. 464
TAMPA, FLORIDA 33607
CERTIFICATE OF AUTHORIZATION NO. 37

P.E. NAME: FREDDY J. BETANCOURT P.E. NO. 68072

P.E. NAME:
DATE:

Engineering Design Technologies Corp.
P.O. Box 152403
Tampa, FL 33684-2403
813.289.8080
813.282.9184 FAX
engineering@edt1.com
Certificate of Authorization Number: 4795

CITY of TAMPA
WASTEWATER DEPARTMENT

KRAUSE PS REHABILITATION

UPPER LEVEL PLAN

NO.	DAT	
1	7/30/14	MOD. CAPACITY TO 6.5 TONS

RED LINES

NO CHANGES

DRAWN: J.WHITE
DESIGN: FJB
QC: DCH
DATE: 01/27/15

SHEET M-6

B080-023

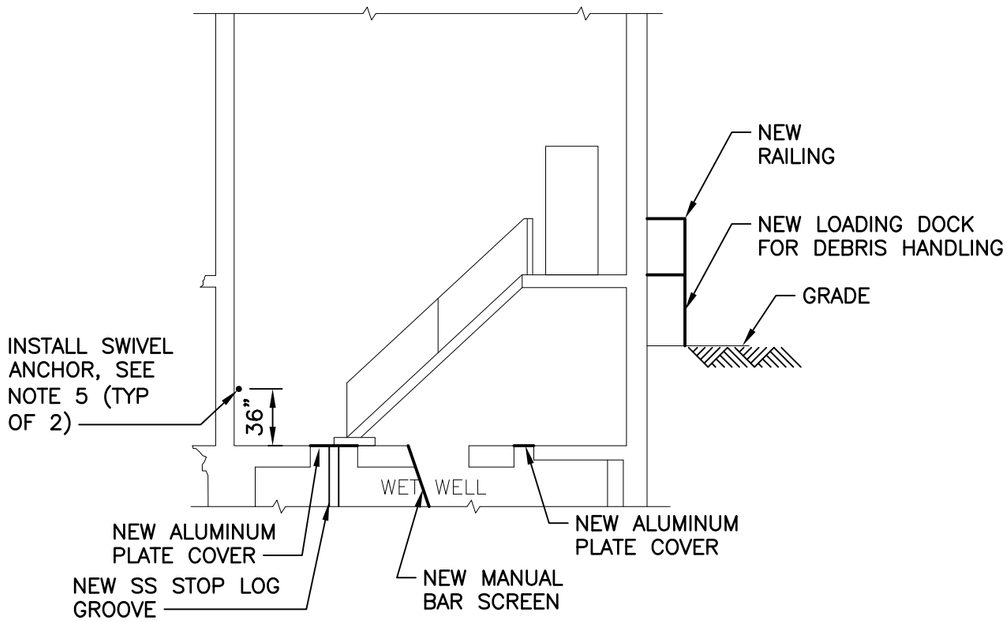

SECTION 1/M5

SCALE: 1/8" = 1'-0"

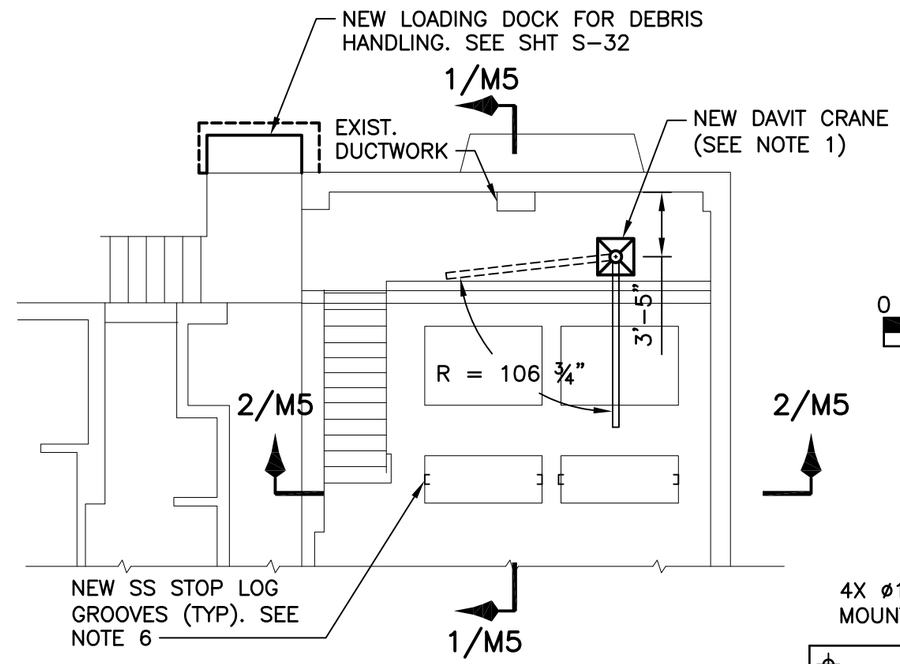

PLAN/SCREEN ROOM

SCALE: 1/8" = 1'-0"

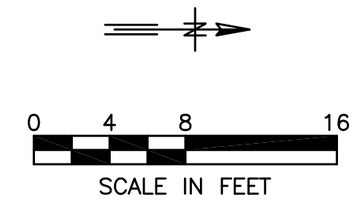

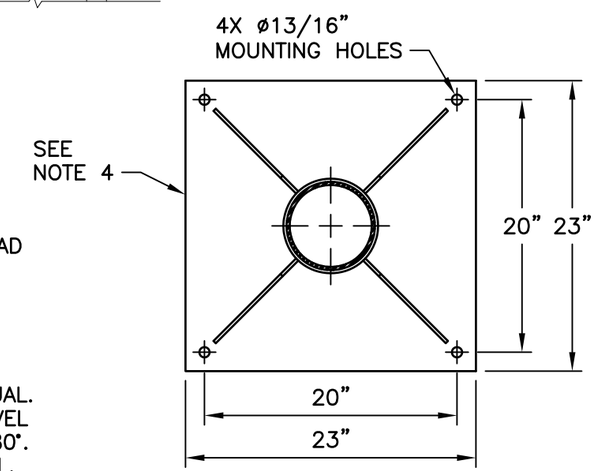

CRANE BASE PLATE DETAIL

NOT TO SCALE

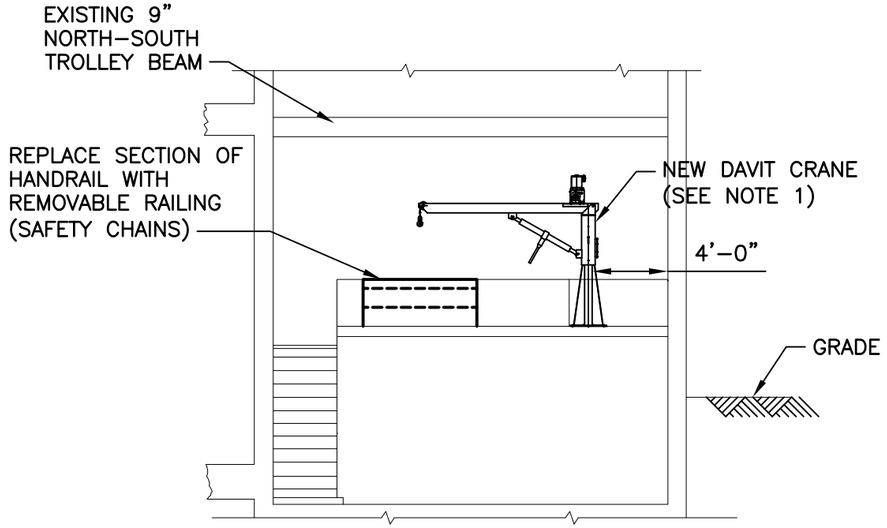

SECTION 2/M5

SCALE: 1/8" = 1'-0"

NOTES:

1. INSTALL NEW THERN SERIES 572 DAVIT CRANE (MIN. 1,700 LB LOAD RATING) TO INCLUDE PNEUMATIC WINCH – 572E3PN, ADJUSTABLE SCREW JACK SJ2, PNEUMATIC CONTROLS – 477PN – CNTRL, PNEUMATIC WINCH HOSES – 477PN-HS6, AND A MINIMUM OF 36 FEET OF 5/16" DIA. 304 STAINLESS STEEL WIRE.

2. INSTALL TO 5K HYBRID MEGA SWIVEL ANCHORS OR APPROVED EQUAL. INSTALL ANCHORS IN CONCRETE WALL FOR FALL PROTECTION. SWIVEL ANCHORS SHALL BE CAPABLE OF ROTATING 360° AND FLIPPING 180°. LOCATION OF ANCHORS TO BE COORDINATED WITH CITY PERSONNEL.

3. SECURE SS STOP LOG GROOVES TO EXISTING CHANNEL WALLS WITH HILTI COUNTERSUNK STAINLESS STEEL SS316L KWIK BOLT 3 ANCHORS (C3/8X4) SPACED AT 4 INCHES ON CENTER. INSTALL ANCHORS PER MANUFACTURER'S RECOMMENDATIONS. PRE-DRILL WALL SURFACE MOUNTED STAINLESS STEEL STOP LOG CHANNEL TO ACCOMMODATE COUNTERSUNK ANCHOR HEAD. ANCHORS ARE DESIGNED FOR WATER DEPTH OF 20 FEET MAXIMUM.

4. ANCHOR USING ¾" DIAMETER HILTI RODS (AISI GRADE 304/316 STAINLESS STEEL) OR APPROVED EQUAL. EMBED RODS 8-3/4" FROM TOP OF FINISHED SLAB. ADHERE RODS WITH HILTI HIT-RE 500 EPOXY. INSTALL RODS AND EPOXY PER MANUFACTURER. ASSUME SLAB TO BE 8-INCHES THICK WITH 2-INCHES CONCRETE TOPPING.

GREELEY AND HANSEN
1715 N. WESTSHORE BLVD., STE. 464
TAMPA, FLORIDA 33607
CERTIFICATE OF AUTHORIZATION NO. 37

P.E. NAME: FREDDY J. BETANCOURT P.E. NO. 68072
P.E. NAME:
DATE:

EDT Engineering Design Technologies Corp.
P.O. Box 152403
Tampa, FL 33684-2403
813.289.8080
813.282.9184 FAX
engineering@edt1.com
Certificate of Authorization Number: 4795

CITY of TAMPA
WASTEWATER DEPARTMENT

KRAUSE PS REHABILITATION

SCREEN AREA
SECTIONS AND DETAILS FOR
DEBRIS REMOVAL EQUIPMENT

NO.	DATE	REVISIONS
1	7/3/1	[illegible]

RED LINES

NO CHANGES

DRAWN: J.WHITE
DESIGN: FJB
QC: DCH
DATE: 01/27/15

SHEET M-7

B080-024

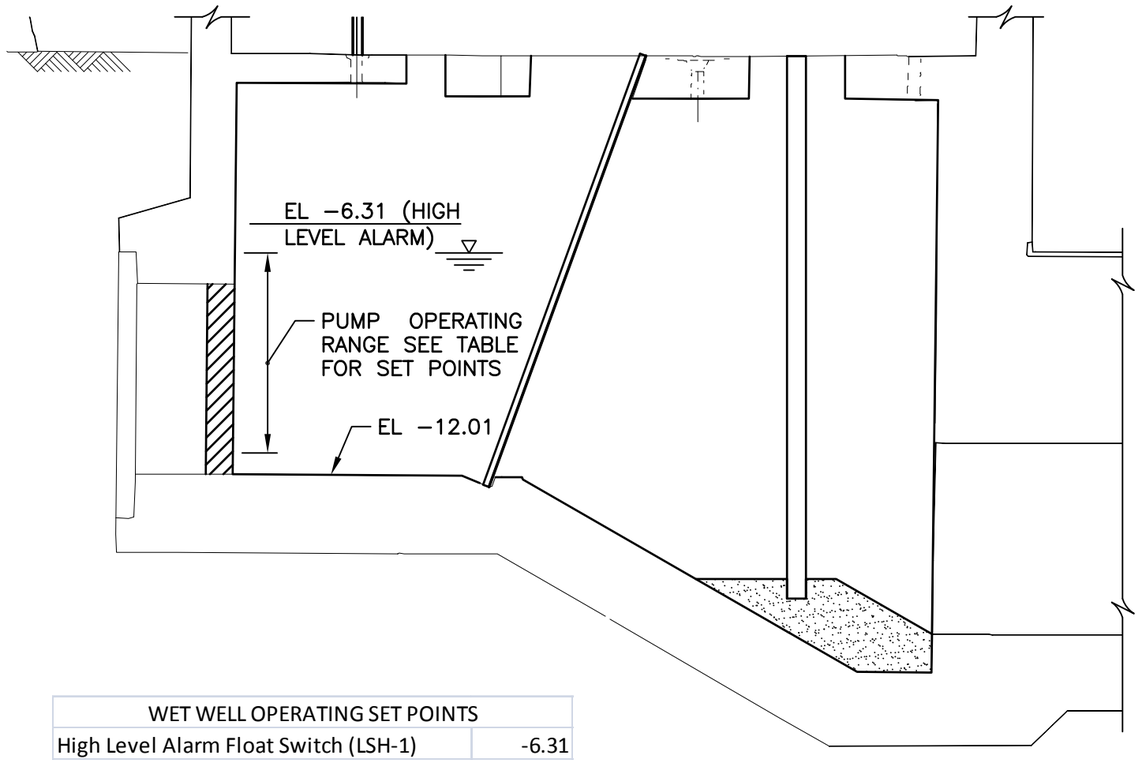

WET WELL OPERATING SET POINTS	
High Level Alarm Float Switch (LSH-1)	-6.31
Lag Pump No.2 Start - Set Point	-6.81
Lag Pump No.2 Off - Set Point	-7.31
Lag Pump No.1 Start - Set Point	-7.81
Lag Pump No.1 Off - Set Point	-8.31
Lead Pump Start - Set Point	-8.81
Lead Pump Off - Set Point	-9.81

WET WELL SECTION

SCALE: 1/4" = 1'-0"

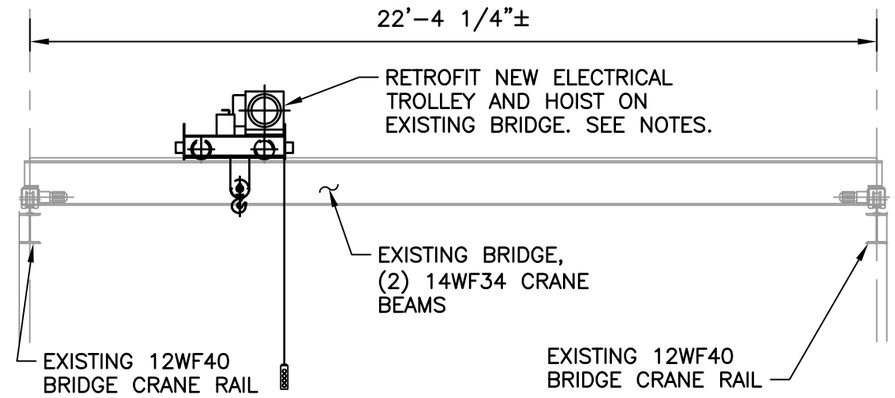

BRIDGE CRANE TROLLEY AND HOIST REPLACEMENT DETAIL

SCALE: 1/4" = 1'-0"

NOTES:

1. FIELD VERIFY DIMENSIONS PRIOR TO SUBMITTAL OF SHOP DRAWINGS.
2. REMOVE EXISTING 5-TON HOIST AND HAND GEARED TROLLEY FROM EXISTING BRIDGE.
3. PROVIDE CUSTOM FABRICATED 7-TON CAPACITY, DECK MOUNTED WITH SPECIAL TOP, ELECTRICAL INVERTER TROLLEY (50 FPM) WITH TWO (2) ½ HP MOTORS AND RETROFIT TO EXISTING BRIDGE.
4. PROVIDE A NEW 7.5-TON, 2-SPEED (15 FPM/3 FPM) ELECTRICAL HOIST (7 ½ HP MOTOR) THAT WILL BE DE-RATED TO 7-TONS. THE WIRE HOIST SHALL BE CAPABLE OF A 32 FOOT VERTICAL LIFT. ELECTRICAL TROLLEY AND ELECTRICAL HOIST SHALL BE PROVIDED AS A PACKAGE UNIT FROM A SINGLE SOURCE, SUCH AS ADVANCED OVERHEAD SYSTEMS (TEL: 863-667-3757), TO WARRANTY THE EQUIPMENT AS A SINGLE UNIT.
5. COORDINATE ELECTRICAL REQUIREMENTS FOR TROLLEY AND HOIST MOTORS. PROVIDE NEW CABLE REEL AND CABLE.
6. AFTER INSTALLATION, PERFORM OSHA FIELD LOAD TEST AT 14,000 LBS AND RE-RATE BRIDGE AND EQUIPMENT TO 7-TONS. INSTALL NEW CAPACITY NAMEPLATES FOR THE EQUIPMENT.

GREELEY AND HANSEN
1715 N. WESTSHORE BLVD., STE. 464
TAMPA, FLORIDA 33607
CERTIFICATE OF AUTHORIZATION NO. 37

P.E. NAME: FREDDY J. BETANCOURT P.E. NO. 68072

P.E. NAME:
DATE:

Engineering Design Technologies Corp.
P.O. Box 152403
Tampa, FL 33684-2403
813.289.8080
813.282.9184 FAX
engineering@edt1.com
Certificate of Authorization Number: 4795

CITY of TAMPA
WASTEWATER DEPARTMENT

KRAUSE PS REHABILITATION

WET WELL LEVELS AND BRIDGE CRANE TROLLEY AND HOIST REPLACEMENT

NO.	DATE	
1	7/28/	ETAIL

RED LINES

NO CHANGES

DRAWN: J.WHITE
DESIGN: FJB
QC: DCH
DATE: 01/27/15

SHEET M-8

GENERAL STRUCTURAL NOTES

B080-025

SCOPE OF WORK

1. WORK DETAILED ON THE DRAWINGS AND APPLICABLE ITEMS DESCRIBED IN THE GENERAL STRUCTURAL NOTES.
2. STRUCTURAL DESIGN AND CONSULTATION SERVICES FOR THE PUMP STATION REHABILITATION INCLUDE THE FOLLOWING:
   A. IN-FILL OF THE EXISTING BASEMENT ELECTRICAL ROOM
   B. COVERING OF STAIR OPENING TO THE EXISTING BASEMENT ELECTRICAL ROOM AND ADDRESS THE EXISTING CURBING AND SUBSEQUENT SLAB REPAIRS
   C. PERFORMANCE SPECIFICATIONS AND SCHEMATIC DRAWINGS OF THE PLATFORM (STRUCTURAL STEEL, GRATING, GUARDRAILS AND STAIRS) FOR THE ELECTRICAL EQUIPMENT ON THE MAIN LEVEL THAT IS TO BE RAISED ABOVE THE 100-YEAR FLOOD ELEVATION (APPROXIMATELY 2'-6" ABOVE EXISTING FLOOR - CLEARANCE IS ADEQUATE FROM UNDERSIDE OF EXISTING ROOF STRUCTURE TO TOP OF NEW ELECTRICAL EQUIPMENT ON THE NEW PLATFORM
   D. PROVIDE FOR NEW EXIT OPENING (INCLUDING DOOR AND FRAME SPECIFICATION) AND EXTERIOR STAIRS AT ELECTRICAL EQUIPMENT
   E. STRUCTURAL RELATED DESIGN FOR SETTING NEW IMMERSIBLE PUMPS
   F. STRUCTURAL RELATED DESIGN FOR EXTERIOR TRANSFORMER - DESIGN NEW PLATFORM FOR ACCESS AT PROPER LEVEL
   G. THE EXISTING MANUAL SCREENS WILL BE ADDRESSED PER MECHANICAL DRAWINGS. CLEARANCE IS ADEQUATE FROM UNDERSIDE OF EXISTING ROOF STRUCTURE FOR BAR SCREENS TO BE ADDRESSED. NO MODIFICATION OF THE ROOF STRUCTURE IS PROPOSED AND/OR REQUIRED. 12" CMU PARTITION WALL TO BE REMOVED AND REPLACED AT NEW LOCATION.
   H. THE EXISTING STEEL ROOF FRAMING IN THE SCREEN ROOM EXHIBITS CORROSION. THE STEEL IS TO BE CLEANED AND RECOATED PER S-7.
   I. PROVIDE INSTALLATION DESIGN AND/OR PERFORMANCE SPECIFICATIONS FOR HOISTING EQUIPMENT AT SOUTH END OF PUMP ROOM TO TRANSPORT EQUIPMENT IN AND OUT OF THE BUILDING THROUGH THE EXISTING EXTERIOR WALL DOUBLE DOORS.

DRAWINGS AND SPECIFICATIONS

1. DO NOT SCALE DRAWINGS FOR DIMENSIONS NOT GIVEN.
2. ADVISE ENGINEER OF DIMENSIONAL DISCREPANCIES.
3. VERIFY ALL EXISTING FIELD CONDITIONS AND DIMENSIONS PRIOR TO COMMENCING CONSTRUCTION.
4. THE CONTRACTOR SHALL PERFORM NO PORTION OF THE WORK AT ANY TIME WITHOUT CONTRACT DOCUMENTS OR, WHERE REQUIRED, APPROVED SHOP DRAWINGS, PRODUCT DATA OR SAMPLES FOR SUCH PORTION OF THE WORK.

CONSTRUCTION SAFETY

1. THESE DRAWINGS DO NOT INCLUDE PROVISIONS TO SATISFY SAFETY REQUIREMENTS. CONTRACTOR IS SOLELY RESPONSIBLE FOR ENSURING SAFETY DURING CONSTRUCTION AND FOR CONFORMANCE TO ALL APPLICABLE OSHA STANDARDS AND OTHER APPLICABLE CODES. JOBSITE VISITS BY ENGINEER SHALL NOT CONSTITUTE APPROVAL, AWARENESS OR LIABILITY FOR ANY HAZARDOUS CONDITIONS.

SHORING AND SUPPORT

1. WHEN REMOVAL OF STRUCTURAL ELEMENTS FOR MODIFICATIONS MAY CAUSE TEMPORARY WEAKNESS, EXCESSIVE DEFLECTIONS OR STRUCTURAL INSTABILITY, SHORING OR OTHER SUITABLE SUPPORTS SHALL BE PROVIDED UNTIL COMPLETION AND ADEQUATE CURING OF MODIFICATIONS.
2. THE CONTRACTOR SHALL SUBMIT CUT SHEETS WITH CERTIFIED CAPACITIES FOR SHORING TO BE USED. SHORING PLANS SHALL BE PREPARED, SIGNED AND SEALED BY AN ENGINEER REGISTERED IN THE STATE OF FLORIDA.

VALUE ENGINEERING

1. ANY CHANGES TO THE STRUCTURE OR DESIGN SHALL HAVE BEEN REVIEWED AND APPROVED IN WRITING BY THE ENGINEER PRIOR TO COMMENCING WORK ON ITEMS AFFECTED.

FIELD MODIFICATIONS

1. ANY CHANGES TO THE STRUCTURE SHALL HAVE BEEN REVIEWED AND APPROVED IN WRITING BY THE ENGINEER PRIOR TO COMMENCING WORK ON ITEMS AFFECTED.
2. ANY CHANGES MADE WITHOUT PRIOR APPROVAL ARE SUBJECT TO REVIEW BY THE ENGINEER. CONTRACTOR SHALL PROVIDE SKETCHES, PHOTOGRAPHS AND WRITTEN DESCRIPTION OF EACH DEVIATION FROM THE PLANS FOR THE ENGINEER'S REVIEW.

BUILDING CODES AND SPECIFICATIONS

1. FLORIDA BUILDING CODE 2010 WITH LATEST UPDATES.
2. MINIMUM DESIGN LOADS FOR BUILDINGS AND OTHER STRUCTURES ASCE 7-10.
3. BUILDING CODE REQUIREMENTS FOR MASONRY STRUCTURES ACI 530-08 / ASCE 5-08 / TMS 402-08.
4. BUILDING CODE REQUIREMENTS FOR STRUCTURAL CONCRETE ACI 318-08.
5. AISC MANUAL OF STEEL CONSTRUCTION, 13TH EDITION.
6. STRUCTURAL WELDING CODE D1-1.

DESIGN LOADS

1. DEAD LOADS
   A. TABLE C3-1: MINIMUM DESIGN LOADS, ASCE 7-10
2. LIVE LOADS
   A. ROOF .....20 PSF
   B. WALKWAYS AND ELEVATED PLATFORMS.....60 PSF
   C. STAIRS AND EXIT WAYS.....100 PSF
   D. EQUIPMENT.....AFD'S = 5000 LBS EACH
   E. TRANSFER CART AND MOTOR.....6 TONS (12 KIPS)
3. WIND LOAD
   A. DESIGN WIND SPEED .....150 MPH (3 SECOND GUST)
   B. EXPOSURE CATEGORY C
   F. ASCE 7 BUILDING RISK CATEGORY IV
   G. ENCLOSED BUILDING
4. COMPONENT AND CLADDING
   A. SPECIALTY ENGINEER DESIGNING THE COMPONENTS AND CLADDING SHOULD DETERMINE THE TRIBUTARY AREA FOR SUCH COMPONENTS AND CLADDING AND USE THE TABLE FOR THE AREA EQUAL TO OR SMALLER THAN THE ACTUARIAL TRIBUTARY AREA.
   B. COMPONENT AND CLADDING SUB-CONTRACTOR SHALL PROVIDE SIGNED AND SEALED DRAWINGS AND CALCULATIONS BY A PROFESSIONAL ENGINEER REGISTERED IN THE STATE OF FLORIDA INCLUDING THE DESIGN OF THE COMPONENTS AND CLADDING, CONNECTIONS TO THE MAIN STRUCTURE.

billerreinhart ENGINEERING GROUP INC.
3434 colwell avenue suite 100, tampa, florida 33614
telephone : 813.908.7203 fax : 813.931.5200
email : info@billerreinhart.com
State of Florida Certificate of Authorization No. 9149

TO THE BEST OF THE ENGINEER'S KNOWLEDGE THE PLANS AND SPECIFICATIONS COMPLY WITH THE APPLICABLE MINIMUM BUILDING CODES

ROBERT J. REINHART
FL. P.E. NO. 50076

EDT Engineering Design Technologies Corp.
P.O. Box 152403
Tampa, FL 33684-2403
813.289.8080
813.282.9184 FAX
engineering@edt1.com
Certificate of Authorization Number: 4795

CITY of TAMPA
WASTEWATER DEPARTMENT

KRAUSE PS REHABILITATION

GENERAL STRUCTURAL NOTES

NO.	DATE
1	1/27/1

RED LINES
NO CHANGES

DRAWN: RC, KC
DESIGN: RR
QC: RR
DATE: 06/03/14

SHEET S-1

GENERAL STRUCTURAL NOTES (CONT.)

B080-026

5. ROOF COMPONENTS AND CLADDING, PITCHED ROOF AREA (>10 TO 45 DEGREES)

PRESSURE

EFFECTIVE WIND AREA (SQ. FT.)	EXTERNAL PRESSURE COEFFICIENT GCp ZONE 1 FIELD	ZONE 2 EDGE	ZONE 3 CORNER	INTERNAL PRESSURE COEFFICIENT GCpi	P (psf) ZONE 1 FIELD	ZONE 2 EDGE	ZONE 3 CORNER
< 10	0.50	0.50	0.50	± 0.18	32.63	32.63	32.63
20	0.42	0.42	0.42	± 0.18	28.79	28.79	28.79
50	0.38	0.38	0.38	± 0.18	26.87	26.87	26.87
100 <	0.30	0.30	0.30	± 0.18	23.03	23.03	23.03

SUCTION

EFFECTIVE WIND AREA (SQ. FT.)	EXTERNAL PRESSURE COEFFICIENT GCp ZONE 1 FIELD	ZONE 2 EDGE	ZONE 3 CORNER	INTERNAL PRESSURE COEFFICIENT GCpi	P (psf) ZONE 1 FIELD	ZONE 2 EDGE	ZONE 3 CORNER
< 10	-0.90	-1.70	-2.60	± 0.18	-51.82	-90.20	-133.39
20	-0.86	-1.56	-2.40	± 0.18	-49.90	-83.49	-123.79
50	-0.82	-1.38	-2.20	± 0.18	-47.98	-74.85	-114.19
100 <	-0.80	-1.20	-2.00	± 0.18	-47.02	-66.21	-104.60

OVERHANG

EFFECTIVE WIND AREA (SQ. FT.)	EXTERNAL PRESSURE COEFFICIENT GCp ZONE 1 FIELD	ZONE 2 EDGE	ZONE 3 CORNER	INTERNAL PRESSURE COEFFICIENT GCpi	P (psf) ZONE 1 FIELD	ZONE 2 EDGE	ZONE 3 CORNER
< 10	-	-2.20	-3.70	± 0.18	-	-114.19	-186.17
20	-	-2.20	-3.38	± 0.18	-	-114.19	-170.81
50	-	-2.20	-2.82	± 0.18	-	-114.19	-143.94
100 <	-	-2.20	-2.50	± 0.18	-	-114.19	-128.59

ROOF CORNER ZONE WIDTH = 3'-0" | ROOF CORNER ZONE LENGTH = 3'-0" | ROOF EDGE ZONE WIDTH = 3'-0"

∗NOTE: WIND LOAD CALCULATIONS ARE BASED ON LRFD VALUES OF ASCE 7–10

6. WALL COMPONENTS AND CLADDING

PRESSURE

EFFECTIVE WIND AREA (SQ. FT.)	EXTERNAL PRESSURE COEFFICIENT GCp ZONE 4 FIELD	ZONE 5 EDGE		INTERNAL PRESSURE COEFFICIENT GCpi	P (psf) ZONE 4 FIELD	ZONE 5 EDGE	
< 10	1.0	1.0		± 0.18	56.62	56.62	
20	0.95	0.95		± 0.18	54.22	54.22	
50	0.87	0.87		± 0.18	50.38	50.38	
100	0.80	0.80		± 0.18	47.02	47.02	

SUCTION

EFFECTIVE WIND AREA (SQ. FT.)	EXTERNAL PRESSURE COEFFICIENT GCp ZONE 4 FIELD	ZONE 5 EDGE		INTERNAL PRESSURE COEFFICIENT GCpi	P (psf) ZONE 4 FIELD	ZONE 5 EDGE	
< 10	-1.10	-1.40		± 0.18	-61.42	-75.81	
20	-1.05	-1.30		± 0.18	-59.02	-71.01	
50	-0.99	-1.18		± 0.18	-56.14	-65.25	
100	-0.96	-1.03		± 0.18	-54.70	-58.06	

WALL EDGE ZONE WIDTH = 3'-0"

∗NOTE: WIND LOAD CALCULATIONS ARE BASED ON LRFD VALUES OF ASCE 7–10

SHALLOW SPREAD FOUNDATIONS

1. FOUNDATION DESIGN BASED ON 2000 PSF MINIMUM ALLOWABLE BEARING PRESSURE, TO BE VERIFIED BY CONTRACTOR.
2. NOTIFY ENGINEER IF FOOTING EXCAVATION REVEALS UNSUITABLE OR UNSTABLE SOILS OR MATERIALS OR CONDITIONS NOT PREVIOUSLY ANTICIPATED.
3. CONTRACTOR SHALL CONSIDER THE POSSIBLE IMPACT OF GROUNDWATER ON CONSTRUCTION TECHNIQUES, SEASONAL VARIATIONS, ANY OTHER SITE INDICATORS AND HIS OWN JUDGMENT.
4. SOIL DIRECTLY BELOW FOUNDATIONS AND SLAB ON GRADE SHALL BE COMPACTED TO 95% OF THE ASTM D 1557 (MODIFIED PROCTOR) MAXIMUM DRY DENSITY.

PORTLAND CEMENT CONCRETE - SPECIFICATION 033000

1. CONCRETE PROPERTIES
   A. FOUNDATIONS: 4000 PSI, 3" TO 5" SLUMP
   B. FILLED CELLS IN CMU: 3000 PSI, 8" TO 11" SLUMP, 3/8" PEA GRAVEL
   C. SLABS ON GRADE: 4000 PSI, 3" TO 5" SLUMP
   D. PUMP PEDESTALS AND PIPE SUPPORTS: 4000 PSI, 3" TO 5" SLUMP
   E. EXTERIOR TRANSFORMER PLATFORM AND STAIRS: 4000 PSI, 3" TO 5" SLUMP
2. FLY ASH SHALL NOT EXCEED 20 PERCENT BY WEIGHT OF TOTAL CEMENT, IF USED.
3. CONTRACTOR SHALL STRICTLY ADHERE TO SLUMP LIMITS. SUPERPLASTICIZER MAY BE USED AT THE CONTRACTORS OPTION TO INCREASE WORKABILITY.
4. MAXIMUM MIXING TIME (FROM BATCHING TO PLACEMENT)
   A. AIR TEMPERATURE LESS THAN 85° F: 90 MINUTES
   B. AIR TEMPERATURE 85° F TO 90° F: 75 MINUTES
   C. AIR TEMPERATURE OVER 90° F: 60 MINUTES
5. MINIMUM COVER FOR REINFORCEMENT
   A. FOOTINGS, 3 INCHES TO BOTTOM AND UNFORMED SIDES, 2 INCHES TO FORMED SIDES.
   B. OTHER, 2 INCHES TO MAIN REINFORCING, 1 ½" INCHES TO TIES AND STIRRUPS.
   C. AS SPECIFICALLY NOTED.
6. ALL REINFORCEMENT SHALL BE SECURELY HELD IN PLACE BY STANDARD ACCESSORIES DURING CONCRETE PLACEMENT.
7. REINFORCEMENT SHALL BE GRADE 60 CONFORMING TO ASTM A615.
8. WELDED WIRE FABRIC SHALL CONFORM TO ASTM A185.
9. DETAIL AND FABRICATE REINFORCEMENT IN ACCORDANCE WITH "MANUAL OF STANDARD PRACTICE FOR DETAILING REINFORCED CONCRETE STRUCTURES," ACI 315.
10. PROVIDE MINIMUM LAP SPLICES PER ACI 318-08 FOR ALL REINFORCING BARS, UNLESS OTHERWISE NOTED. STAGGER SPLICES IN ADJACENT BARS AT LEAST 24 INCHES, EXCEPT IN BEAMS AND COLUMNS.
11. IN WALL FOOTINGS, GRADE BEAMS AND BOND BEAMS, PROVIDE BENT BARS AT CORNERS AND INTERSECTIONS OF THE SAME NUMBER AND SIZE AS STRAIGHT BARS.
12. APPLY CURING COMPOUND TO SLAB WITHIN TWO HOURS OF COMPLETION OF FINISHING OPERATIONS. USE LIQUID MEMBRANE FORMING COMPOUND COMPLYING WITH ASTM C309 TYPE 1 CLASS A. APPLY IN ACCORDANCE WITH MANUFACTURER'S SPECIFICATIONS.
13. CHAMFER: 1-INCH TYPICAL ON ALL EXPOSED CORNERS AND EDGES UNLESS NOTED OTHERWISE.
14. NON-SLIP BROOM FINISH ON ALL EXTERIOR CONCRETE PLATFORMS AND STEPS.

billerreinhart ENGINEERING GROUP INC.
3434 colwell avenue suite 100, tampa, florida 33614
telephone : 813.908.7203 fax : 813.931.5200
email : info@billerreinhart.com
State of Florida Certificate of Authorization No. 9149

TO THE BEST OF THE ENGINEER'S KNOWLEDGE THE PLANS AND SPECIFICATIONS COMPLY WITH THE APPLICABLE MINIMUM BUILDING CODES

ROBERT J. REINHART
FL. P.E. NO. 50076

EDT Engineering Design Technologies Corp.
P.O. Box 152403
Tampa, FL 33684-2403
813.289.8080
813.282.9184 FAX
engineering@edt1.com
Certificate of Authorization Number: 4795

CITY of TAMPA
WASTEWATER DEPARTMENT

KRAUSE PS REHABILITATION

GENERAL STRUCTURAL NOTES

RED LINES

NO.	DAT
1	1/27/

NO CHANGES

DRAWN: RC, KC
DESIGN: RR
QC: RR
DATE: 06/03/14

SHEET S-2

GENERAL STRUCTURAL NOTES (CONT.)

B080-027

CONCRETE MASONRY UNITS - GENERAL INFORMATION

1. BLOCKS SHALL BE HOLLOW LOAD-BEARING CONCRETE MASONRY UNITS SHALL CONFORM TO ASTM C 90 LATEST EDITION, TYPE II NON-MOISTURE CONTROLLED. THE MINIMUM NET AREA COMPRESSIVE STRENGTH SHALL BE 1500 PSI FOR AN AVERAGE OF THREE UNITS AND 1900 PSI FOR AN INDIVIDUAL UNIT. SAMPLE AND TEST MASONRY UNITS IN ACCORDANCE WITH ASTM C 140. SAMPLE AND TEST MASONRY GROUT FILL IN ACCORDANCE WITH ASTM C 39.
2. MORTAR SHALL CONFORM TO ASTM C 270 LATEST EDITION. MORTAR FOR ABOVE GRADE WORK SHALL BE TYPE S WITH A MINIMUM 28-DAY COMPRESSIVE STRENGTH OF 1800 PSI. MORTAR FOR BELOW GRADE WORK SHALL BE TYPE M MORTAR WITH A MINIMUM 28-DAY COMPRESSIVE STRENGTH OF 2500 PSI. SAMPLE AND TEST MORTAR IN ACCORDANCE WITH ASTM C 109.
3. PREFABRICATED HORIZONTAL JOINT REINFORCEMENT SHALL HAVE 9 GAGE SIDE RAILS FABRICATED FROM HIGH-STRENGTH COLD-DRAWN WIRE CONFORMING TO ASTM A 82 AND SHALL BE GALVANIZED AFTER FABRICATION. PLACE JOINT REINFORCEMENT IN ALTERNATE COURSES IN ALL WALLS. PLACE THREE ROWS AT 8 INCHES ON CENTER IMMEDIATELY ABOVE ALL WALL OPENINGS AND AT THE TOP OF ALL WALLS. LAP SIDE RAILS AT LEAST 6 INCHES AT SPLICES. JOINT REINFORCEMENT TO BE TRUSS-TYPE.
4. PROVIDE ALL SPECIAL, LINTEL, KNOCK-OUT, JAMB AND SASH BLOCK AS REQUIRED TO COMPLETE THE WALLS. MASONRY SAWS SHALL BE USED TO CUT THE BLOCK AS REQUIRED.
5. BRACE FOUNDATION WALLS BEFORE BACKFILLING AGAINST THEM TO PREVENT OVERSTRESSING, BUCKLING OR ROTATION OF THE WALLS. BRACE ALL WALLS AGAINST WIND, CONSTRUCTION LOADS OR OTHER TEMPORARY FORCES UNTIL SUCH PROTECTION IS NO LONGER REQUIRED FOR THE SAFE SUPPORT OF THE WALL. BRACING SHALL BE THE RESPONSIBILITY OF THE CONTRACTOR.
6. IN ADDITION TO REQUIREMENTS ELSEWHERE IN THE DRAWINGS FOR FILLING MASONRY CELLS, FILL CELLS WITH CONCRETE AND ONE #5 BAR AT A MAXIMUM SPACING OF 48 INCHES UNLESS OTHERWISE NOTED. FILL FIRST CELL EACH SIDE OF ANY OPENING AND FILL FIRST CELL AT END OF WALL.
7. EXTEND AND HOOK VERTICAL BARS INTO FOOTING. EXTEND AND HOOK VERTICAL BARS INTO TOP OF WALL BOND BEAM OR TIE BEAM.
8. ALL VERTICAL BARS SHALL BE SECURELY TIED TO THE LOWER BAR AT ANY SPLICES, ESPECIALLY AT THE FOOTING DOWELS. BARS SHALL BE SECURED IN THEIR PROPER POSITIONS WITHIN THE CELLS BY TIE WIRES, REBAR POSITIONERS OR BY OTHER APPROVED METHODS.
9. PROVIDE CLEANOUTS AND/OR INSPECTION PORTS FOR FILLING CELLS IN LIFTS EXCEEDING 5 FEET. LIFTS SHALL NOT EXCEED 8 FEET.
10. CONTROL JOINT SPACING ALONG A STRAIGHT WALL SHALL NOT EXCEED 25 FEET, NOR 3 TIMES THE WALL HEIGHT. USE PREFORMED NEOPRENE JOINT STRIPS AND STANDARD SASH BLOCKS.
11. PROVIDE CONTROL JOINTS IN ACCORDANCE WITH DETAILS ON THE DRAWINGS AND IN ACCORDANCE WITH THESE GUIDELINES:
    A. AT CHANGES IN WALL HEIGHT
    B. AT CHANGES IN WALL THICKNESS
    C. AT WALL OPENINGS LESS THAN 6'-0" WIDE, ONE SIDE
    D. AT WALL OPENINGS 6'-0" OR WIDER, BOTH SIDES
    E. AT CONTROL JOINTS IN APPLIED PLASTER OR MASONRY VENEER
    F. AT CHASES AND RECESSES FOR PIPES, COLUMNS, ETC.
12. IN ADDITION TO REQUIREMENTS ELSEWHERE IN THE DRAWING, PROVIDE A CONTINUOUS HORIZONTAL #5 IN FULLY GROUTED KNOCK OUT BLOCK BELOW WINDOW OPENINGS EXTENDED 8" BEYOND EACH SIDE OF OPENING.

CONCRETE SLAB ON GRADE - SPECIFICATION 033000

1. THE INTENDED USE OF THE SLAB ON GRADE IS FOR PEDESTRIAN TRAFFIC ONLY.
2. MINIMUM COMPRESSIVE STRENGTH AT 28 DAYS: 4000 PSI
3. MINIMUM THICKNESS: 5 INCHES
4. MAXIMUM SLUMP AT POINT OF DELIVERY: 5 INCHES
5. MAXIMUM AGGREGATE SIZE: 1 INCH
6. ENTRAINED AIR CONTENT: 4.5%
7. WELDED WIRE FABRIC SHALL BE WWF 6X6-W1.4XW1.4, UNLESS OTHERWISE NOTED, CONFORMING TO ASTM A 185.
8. THE WELDED WIRE FABRIC SHALL BE PLACED IN THE CENTER OF THE DEPTH OF SLAB ON GRADE UNLESS OTHERWISE NOTED. ALL MESH JOINTS SHALL BE LAPPED TWO FULL MESHES.
9. INTERRUPT TYPICAL SLAB REINFORCEMENT AT ALL CONSTRUCTION AND EXPANSION JOINTS.
10. CUT ALTERNATE WIRES ALONG THE LINE OF SAW CUT CONTROL JOINTS PRIOR TO PLACING CONCRETE. MAKE SAW CUTS WITHIN 12 HOURS OF CONCRETE PLACEMENT, OR AS SOON AS CUTTING CAN BE DONE SUCH THAT THE SAW BLADE DOES NOT DISLODGE AGGREGATE AND THE EDGES OF THE CUT DO NOT RAVEL.
11. PROVIDE ½" PREFORMED EXPANSION JOINT MATERIAL WHERE SLAB ABUTS VERTICAL SURFACES SUCH AS WALLS AND COLUMNS.
12. PROVIDE TERMITE PROTECTION TO SOIL PER FLORIDA BUILDING CODE 2010 BEFORE SLAB PLACEMENT.
13. PROVIDE VAPOR RETARDER UNDER ALL SLABS ON GRADE IN ENCLOSED SPACE.
14. APPLY CURING COMPOUND TO SLAB WITHIN TWO HOURS OF COMPLETION OF FINISHING OPERATIONS. USE LIQUID MEMBRANE FORMING COMPOUND COMPLYING WITH ASTM C 309 TYPE 1 CLASS A. THE COMPOUND SHALL BE APPLIED IN ACCORDANCE WITH THE MANUFACTURER'S INSTRUCTIONS.
15. THE CONTRACTOR SHALL CONFIRM THAT THE CURING COMPOUND WILL NOT INTERFERE WITH THE BONDING OF ANY APPLIED FLOOR SURFACE. IF THE CURING COMPOUND IS FOUND TO INTERFERE WITH BONDING, THE USE OF WET BURLAP AND TRICKLE HOSES IS ACCEPTABLE.
16. FOR LARGE SLABS, IT IS RECOMMENDED THAT THE SLAB BE CAST IN ALTERNATING LONG STRIPS AND SAW CUT TRANSVERSELY TO MINIMIZE SHRINKAGE CRACKING.

WELDED STEEL GRATING

1. GRATING SHALL BE HOT DIPPED GALVANIZED WELDED STEEL GRATING WITH 1" x $\frac{3}{16}$" SERRATED BEARING BARS AT 1-$\frac{3}{16}$" CENTERS AND CROSS BARS AT 4" CENTERS (GW 19W4).
2. GRATING SHALL BE WELDED TO THE SUPPORT FRAMING EXCEPT THAT REMOVABLE GRATING SHALL BE FASTENED TO SUPPORT FRAMING WITH "GRATE-FAST" GRATING FASTENERS AS MANUFACTURED BY STRUCT-FAST INC., OR APPROVED EQUAL.
3. THE LOCATION'S OF GRATING CUT-OUTS LARGER THAN 6" DIAMETER ARE INDICATED ON DESIGN DRAWINGS. GRATING CUT-OUTS LESS THAN 6" DIAMETER MAY BE CUT IN THE FIELD.
4. HOLES THROUGH GRATING 6" IN DIAMETER AND LARGER SHALL BE BANDED, UNLESS TOE PLATE IS CALLED FOR ON THE DESIGN DRAWINGS.
5. GRATING SHALL BE SHOP-CUT AND BANDED AT ALL COLUMNS, BRACING, POSTS, GUSSET PLATES AND OTHER LOCATIONS INDICATED ON THE DESIGN DRAWINGS.

STEEL STAIRS

1. STAIR TREADS SHALL BE HOT DIPPED GALVANIZED WELDED STEEL GRATING WITH 1" x 3/16" SERRATED BEARING BARS AT 1-$\frac{3}{16}$" CENTERS AND CROSS BARS AT 4" CENTERS. STAIR TREADS SHALL BE HOT DIPPED GALVANIZED WITH STEEL END PLATES AND CHECKERED PLATE NOSING.
2. STAIR TREADS SHALL BE SHOP ASSEMBLED TO STRINGERS.
3. ALL RISERS MUST BE EQUAL ON A SET OF STAIRS.
4. STAIR STRINGERS SHALL BE C10 X 15.3, GALVANIZED AS PER ASTM A123.

billerreinhart ENGINEERING GROUP INC.
3434 colwell avenue suite 100, tampa, florida 33614
telephone : 813.908.7203 fax : 813.931.5200
email : info@billerreinhart.com
State of Florida Certificate of Authorization No. 9149

TO THE BEST OF THE ENGINEER'S KNOWLEDGE, THE PLANS AND SPECIFICATIONS COMPLY WITH THE APPLICABLE MINIMUM BUILDING CODES

ROBERT J. REINHART
FL. P.E. NO. 50076

EDT Engineering Design Technologies Corp.
P.O. Box 152403
Tampa, FL 33684-2403
813.289.8080
813.282.9184 FAX
engineering@edt1.com
Certificate of Authorization Number: 4795

CITY of TAMPA
WASTEWATER DEPARTMENT

KRAUSE PS REHABILITATION

GENERAL STRUCTURAL NOTES

NO.	DATE	CONFORMED
1	1/27/15	

RED LINES
NO CHANGES

DRAWN: RC, KC
DESIGN: RR
QC: RR
DATE: 06/03/14

SHEET S-3

GENERAL STRUCTURAL NOTES (CONT.)

B080-028

STRUCTURAL STEEL - SPECIFICATION 051000

1. ALL W-SHAPED STEEL (BEAMS AND COLUMNS) SHALL CONFORM TO ASTM A992 GRADE 50.
2. STEEL CHANNELS, ANGLES, PLATES, AND BARS CONFORM TO ASTM A36.
3. RECTANGULAR HOLLOW STRUCTURAL SECTIONS (HSS) SHALL CONFORM TO ASTM A500 GRADE B, Fy = 46 KSI.
4. ROUND HOLLOW STRUCTURAL SECTIONS (HSS) SHALL CONFORM TO ASTM A500 GRADE B, Fy = 42 KSI.
5. STRUCTURAL STEEL PIPE SECTIONS SHALL CONFORM TO ASTM A53 GRADE B, Fy = 35 KSI.
6. ANCHOR BOLTS AND RODS SHALL CONFORM TO ASTM F1554 GRADE 36.
7. ALL BEAMS SHALL BE FABRICATED AND ERECTED WITH NATURAL CAMBER UP.
8. ALL WELDS SHALL BE MADE WITH E70 LOW HYDROGEN ELECTRODES, BY QUALIFIED WELDERS AS PER AWS D1.1 REQUIREMENTS.
9. ALL BOLTS, EXCEPT ANCHOR BOLTS, SHALL BE HIGH-STRENGTH ASTM A325, 3/4 IN. DIA., UNLESS NOTED OTHERWISE. USE HARDENED WASHERS UNDER TURNED ELEMENTS.
10. CONTRACTOR SHALL PROVIDE ADEQUATE TEMPORARY BRACING, SHORING AND GUYING OF THE FRAMING AGAINST WIND, CONSTRUCTION LOADS OR OTHER TEMPORARY FORCES UNTIL SUCH PROTECTION IS NO LONGER REQUIRED FOR THE SAFE SUPPORT OF THE STRUCTURE.
11. RETURN ALL WELDS AT CORNERS TWICE THE NOMINAL WELD SIZE MINIMUM.
12. ANCHOR BOLTS SHALL BE FURNISHED WITH HEAVY HEX NUTS AND FLAT WASHERS AND SHALL BE THREADED WITH A NUT AT THE EMBEDDED END. TAC WELD NUT TO BOLT OR STRIKE THREADS.
13. ALL COPES, BLOCKS, CUTOUTS AND OTHER CUTTING OF STRUCTURAL MEMBERS SHALL HAVE ALL REENTRANT CORNERS SHAPED NOTCH-FREE TO A RADIUS OF 1/2 IN. MINIMUM.
14. ENDS OF COLUMNS SHALL BE MILLED TO BEAR AT ALL SPLICES AND ATTACHMENT OF BASE PLATES.
15. WELDS NOT OTHERWISE DESIGNATED SHALL BE 1/4 IN. MINIMUM FILLET WELDS.
16. ADHESIVE ANCHORS SHALL BE THE HILTI HIT RE 500 ADHESIVE ANCHOR SYSTEM (OR APPROVED EQUAL) INSTALLED AS PER MANUFACTURER'S RECOMMENDATIONS.
17. EXPANSION ANCHORS SHALL BE HILTI KWIK BOLT III (OR APPROVED EQUAL) INSTALLED AS PER THE MANUFACTURERS RECOMMENDATIONS.
18. ALL STRUCTURAL STEEL SHALL BE GALVANIZED AS PER ASTM A123.
19. WHEN SPECIFICALLY NOT DETAILED ON THE DESIGN DRAWINGS PROVIDE THE GREATER OF ONE OF THE FOLLOWING BEAM END CONNECTIONS:
    A. MINIMUM 5/16 INCHES THICK DOUBLE ANGLE SHEAR CONNECTION, FULL DEPTH OF THE BEAM, WELDED OR BOLTED WITH VERTICAL BOLT SPACING = 3".
    B. WHERE BEAM REACTIONS ARE SHOWN, CONNECTIONS SHALL DEVELOP THE REACTION GIVEN.
    C. WHEN BEAM REACTIONS ARE NOT SHOWN, CONNECTIONS SHALL BE PROPORTIONED TO SUPPORT 60% OF THE TOTAL UNIFORM LOAD CAPACITY (ULC) SHOWN IN THE ALLOWABLE UNIFORM LOAD TABLES, PART 3 OF THE AISC STEEL CONSTRUCTION MANUAL, FOR THE GIVEN BEAM, SPAN, AND GRADE OF STEEL SPECIFIED. FOR COMPOSITE BEAMS, PROPORTION CONNECTIONS FOR 100 % OF THE ULC.
    D. CONNECTIONS SHALL BE PROPORTIONED FOR THE ECCENTRICITY BETWEEN THE CONNECTION CENTROID AND THE CENTROID OF THE SUPPORTING MEMBER.
20. SHOP DRAWINGS TO BE SUBMITTED PER PROJECT SPECIFICATION SECTION 051000 STRUCTURAL STEEL.

GUARD RAIL AND HANDRAIL DESIGN NOTES

1. THE CONTRACTOR SHALL SUBMIT MANUFACTURER'S PRODUCT TECHNICAL DATA, SPECIFICATION, AND LABORATORY TEST RESULTS THAT VALIDATE PRODUCT COMPLIANCE WITH THE REQUIREMENTS FOR THE PROJECT. SHOW COMPLETE LAYOUT; PLAN VIEWS, ELEVATIONS CONNECTIONS, DETAILS FOR FABRICATION AND ATTACHMENT TO OTHER ELEMENTS, AND OTHER INSTALLATION DETAILS.
2. INCLUDE CALCULATIONS AND MEASUREMENTS SIGNED AND SEALED BY A FLORIDA REGISTERED PE ENGINEER RESPONSIBLE FOR THE SYSTEM'S STRUCTURAL DESIGN.
3. THE CONTRACTOR SHALL ISSUE CERTIFICATES OF WARRANTY STATING THAT ALL MATERIALS HAVE BEEN INSTALLED IN ACCORDANCE WITH THE MANUFACTURER'S PUBLISHED INSTRUCTIONS. PROVIDE A 5 YEAR WARRANTY AGAINST WORKMANSHIP AND FINISH
4. ALL SUBMITTALS FOR SUBSTITUTIONS MUST BE MADE IN WRITING TO THE ENGINEER WITH SUPPORTING TECHNICAL DATA SHEETS AND TEST DATA SHOWING COMPLETE EQUIVALENT PERFORMANCE.
5. STRUCTURAL PERFORMANCE OF RAILING SYSTEM: ENGINEER, FABRICATE, AND INSTALL HAND RAILING SYSTEMS TO WITHSTAND ALL APPLICABLE STRUCTURAL LOADS AS INDICATED MEET OR EXCEED APPLICABLE BUILDING CODES.
6. ALL FASTENERS TO BE CORROSIVE RESISTANT GALVANIZED. FASTENER SIZE AND TYPE SHALL BE AS PER THE MANUFACTURER'S ENGINEERED DRAWINGS. FASTENERS SHALL BE COATED OR ISOLATED (NEOPRENE WASHERS), IF REQUIRED, TO INHIBIT GALVANIC ACTION.
7. GUARDRAIL/HANDRAIL SYSTEMS SHALL BE DESIGNED FOR A SINGLE CONCENTRATED LOAD OF 200 LBS. APPLIED IN ANY DIRECTION AT ANY POINT ON THE TOP OF THE GUARDRAIL AND TO TRANSFER THIS LOAD THROUGH THE SUPPORTS TO THE STRUCTURE. THIS LOAD NOT BE ASSUMED TO ACT CONCURRENTLY WITH THE LOADS SPECIFIED IN FBC §1607.7.1. (FBC §1607.7.1.1).
8. GUARDRAIL/HANDRAIL SYSTEMS SHALL BE DESIGNED FOR TO RESIST A LOAD OF 50 POUNDS PER LINEAL FOOT OR A CONCENTRATED LOAD OF 200 POUNDS APPLIED IN ANY DIRECTION AT THE TOP OF SUCH BARRIERS AT ANY LOCATION ON THE SAFEGUARD, WHICHEVER CONDITION PRODUCES THE MAXIMUM STRESSES. THE REACTIONS AND STRESSES CAUSED BY THE ABOVE REFERENCED UNIFORM AND CONCENTRATED LOADS SHALL BE CONSIDERED NOT BE ACTING SIMULTANEOUSLY (FBC HVHZ §1618.4.6.1).
9. COMPONENTS - INTERMEDIATE RAILS (ALL THOSE EXCEPT THE HANDRAIL), BALUSTERS AND PANEL FILLERS SHALL BE DESIGNED TO WITHSTAND A HORIZONTALLY APPLIED NORMAL LOAD OF 50 POUNDS ON AN AREA EQUAL TO 1 SQ. FT., INCLUDING OPENINGS AND SPACE BETWEEN RAILS. REACTIONS DUE TO THIS LOADING ARE NOT REQUIRED TO BE SUPERIMPOSED WITH THOSE OF FBC §1607.7.1 OR 1607.7.1.1. (FBC §1607.7.1.2).
10. IN HVHZ, INTERMEDIATE RAILS, BALUSTERS AND PANEL FILLERS ARE DESIGNED FOR A UNIFORM HORIZONTAL LOAD OF NOT LESS THAN 25 POUNDS PER SQUARE FOOT OVER THE GROSS AREA OF THE GUARD, INCLUDING THE AREA OF ANY OPENINGS IN THE GUARD, OF WHICH THEY ARE A PART WITHOUT RESTRICTION BY DEFLECTION. REACTIONS RESULTING FROM THIS LOADING NEED NOT BE ADDED TO THE LOADING SPECIFIED IN FBC

STRUCTURAL STAINLESS STEEL

1. PLATES, BARS, CHANNELS AND ANGLES SHALL CONFORM TO ASTM A276 STANDARD SPECIFICATION FOR STAINLESS STEEL BARS AND SHAPES, ALLOY TYPE 304. TUBES SHALL CONFORM TO ASTM A554, ALLOY TYPE 304. STAINLESS STEEL SHEETS SHALL CONFORM TO ASTM A240 (OR ASTM A666), ALLOY TYPE 304.
2. ALL WELDS SHALL BE MADE BY QUALIFIED WELDERS WITH ELECTRODES AS PER AWS REQUIREMENTS FOR STAINLESS STEEL (AWS D1.6 STRUCTURAL WELDING CODE STAINLESS STEEL, AWS E/ER 308 OR 312 FILLER METAL).
3. ALL FRAMING MEMBERS SHALL BE CONNECTED WITH FULL WELDS AT MEMBER INTERFACES. WELDS NOT OTHERWISE DESIGNATED SHALL BE 3/16 INCH MINIMUM FILLET.
4. RETURN ALL WELDS AT CORNERS TWICE THE NORMAL WELD SIZE MINIMUM.
5. ALL BOLTS SHALL CONFORM TO ASTM F593 STAINLESS STEEL SPECIFICATION, ALLOY TYPE 304, ¾ INCH DIAMETER, UNLESS NOTED OTHERWISE.
6. ALL NUTS SHALL CONFORM TO ASTM F594 STAINLESS STEEL SPECIFICATION, ALLOY TYPE 304, UNLESS NOTED OTHERWISE.
7. ALL COPES, BLOCKS, CUTOUTS AND OTHER CUTTING OF STRUCTURAL MEMBERS SHALL HAVE ALL RE-ENTRANT CORNERS SHAPED NOTCH-FREE TO A RADIUS OF ½ INCH MINIMUM.

billerreinhart ENGINEERING GROUP INC.
3434 colwell avenue suite 100, tampa, florida 33614
telephone : 813.908.7203 fax : 813.931.5200
email : info@billerreinhart.com
State of Florida Certificate of Authorization No. 9149

TO THE BEST OF THE ENGINEER'S KNOWLEDGE, THE PLANS AND SPECIFICATIONS COMPLY WITH THE APPLICABLE MINIMUM BUILDING CODES

ROBERT J. REINHART
FL. P.E. NO. 50076

EDT Engineering Design Technologies Corp.
P.O. Box 152403
Tampa, FL 33684-2403
813.289.8080
813.282.9184 FAX
engineering@edt1.com
Certificate of Authorization Number: 4795

CITY of TAMPA
WASTEWATER DEPARTMENT

KRAUSE PS REHABILITATION

GENERAL STRUCTURAL NOTES

RED LINES

NO.	DATE
1	1/27

NO CHANGES

DRAWN: RC, KC
DESIGN: RR
QC: RR
DATE: 06/03/14

SHEET S-4

B080-029

PLAN NOTES

N–1 STRUCTURAL RELATED DESIGN FOR EXTERIOR TRANSFORMER – DESIGN NEW PLATFORM FOR ACCESS AT PROPER LEVEL, SEE SHEETS S–10 AND S–11 FOR PLANS.

N–2 COVERING OF STAIR OPENING TO THE EXISTING BASEMENT ELECTRICAL ROOM AND ADDRESS THE EXISTING CURBING AND SUBSEQUENT SLAB REPAIRS, SEE 1/S–18

N–3 PERFORMANCE SPECIFICATIONS AND SCHEMATIC DRAWINGS OF THE PLATFORM (STRUCTURAL STEEL, GRATING, GUARDRAILS AND STAIRS) FOR THE ELECTRICAL EQUIPMENT ON THE MAIN LEVEL THAT IS TO BE RAISED ABOVE THE 100–YEAR FLOOD ELEVATION (APPROXIMATELY 2'–6" ABOVE EXISTING FLOOR – CLEARANCE IS ADEQUATE FROM UNDERSIDE OF EXISTING ROOF STRUCTURE TO TOP OF NEW ELECTRICAL EQUIPMENT ON THE NEW PLATFORM, SEE 1/S–12, 1/S–13, S–22, S–23 & 1/S–24. COORDINATE PLATFORM WITH E–6

N–4 PROVIDE FOR NEW EXIT OPENING (INCLUDING DOOR AND FRAME SPECIFICATION) AND EXTERIOR STAIRS AT ELECTRICAL EQUIPMENT. DOOR AND FRAME TO CLOSELY MATCH MAIN ENTRY ON EAST ELEVATION. SEE S–28.

N–5 TRANSFER CART AND RAILS THROUGH CENTER LINE OF EXISTING DOORS AND NEW CONCRETE PLATFORM AND STAIRS. SEE S–29.

N–6 NEW EXTERIOR STAIR AND PLATFORM LANDINGS WITH HAND AND GUARDRAILS. SEE S–29.

N–12 LANDING EXTENSION. SEE 1/S–32.

N–13 REPAIR CONCRETE SURFACES IN ACCORDANCE WITH SPECIFICATION 033000 AND ADD MECHANICAL PADS AS REQ'D. SEE 1/S–33.

N–14 SEE S–34 FOR CATWALK MODIFICATIONS.

N–15 12" CMU PARTITION WALL AND 8" CONCRETE SLAB SUPPORTING CMU WALL TO BE REMOVED AND RECONSTRUCTED AT NEW LOCATION. SEE 2/S–32.

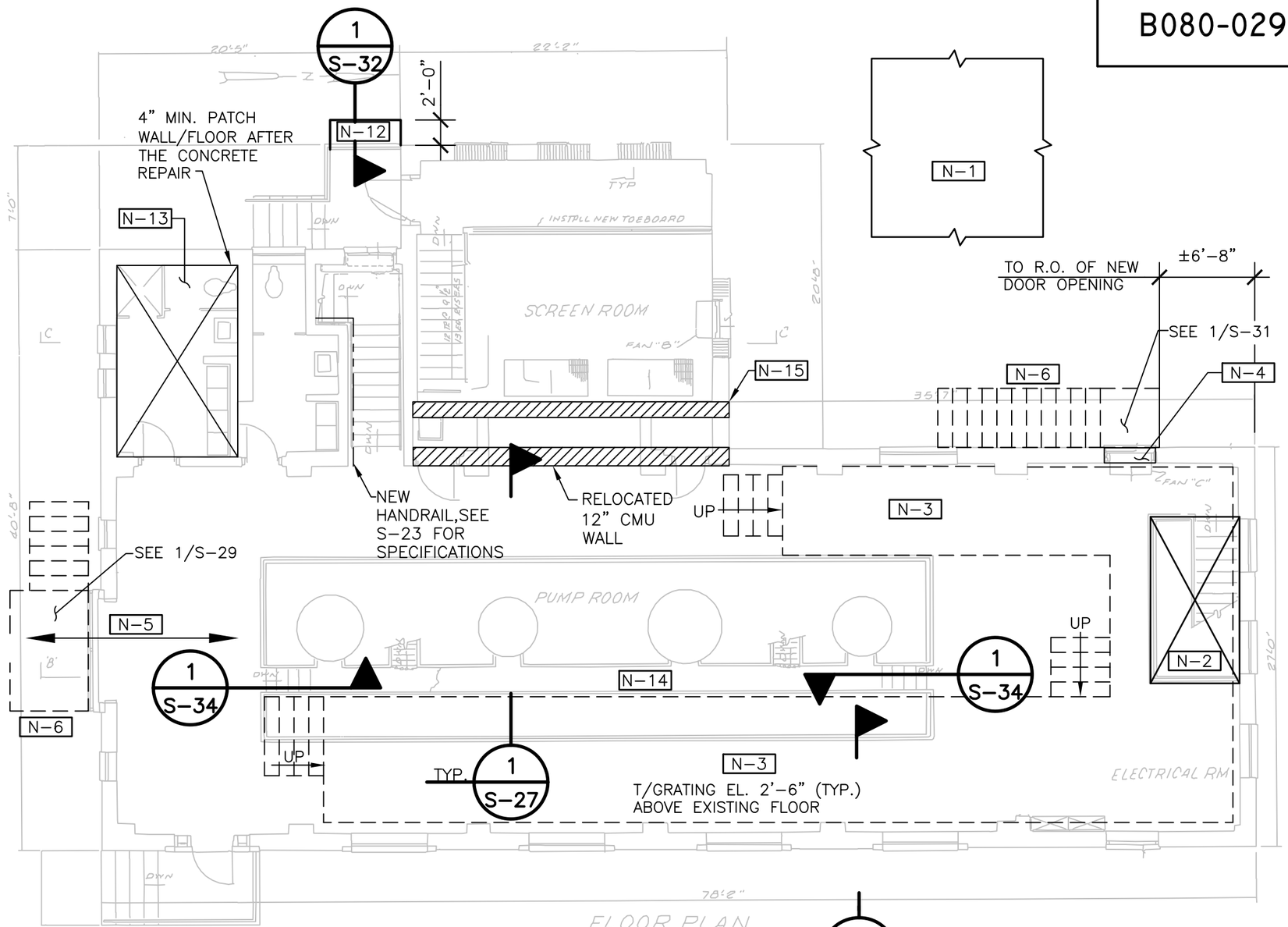

EXISTING PLANS & SECTIONS WITH NEW STRUCTURAL MODIFICATIONS & ADDITIONS

1 / S–5

SCALE: 1/8" = 1'–0" (NOTE EXISTING PLANS & SECTION UNDERLAY IS APPROXIMATE AND FOR LOCATION PURPOSES ONLY)

N

billerreinhart ENGINEERING GROUP INC.
3434 colwell avenue suite 100, tampa, florida 33614
telephone : 813.908.7203 fax : 813.931.5200
email : info@billerreinhart.com
State of Florida Certificate of Authorization No. 9149

TO THE BEST OF THE ENGINEER'S KNOWLEDGE, THE PLANS AND SPECIFICATIONS COMPLY WITH THE APPLICABLE MINIMUM BUILDING CODES

ROBERT J. REINHART
FL. P.E. NO. 50076

EDT
Engineering Design Technologies Corp.
P.O. Box 152403
Tampa, FL 33684-2403
813.289.8080
813.282.9184 FAX
engineering@edt1.com
Certificate of Authorization Number: 4795

CITY of TAMPA
WASTEWATER DEPARTMENT

KRAUSE PS REHABILITATION

EXISTING PLANS WITH NEW STRUCTURAL MODIFICATION & ADDITIONS

NO.	DAT
1	1/27/

RED LINES

NO CHANGES

DRAWN: RC, KC
DESIGN: RR
QC: RR
DATE: 06/03/14

SHEET S-5

B080-030

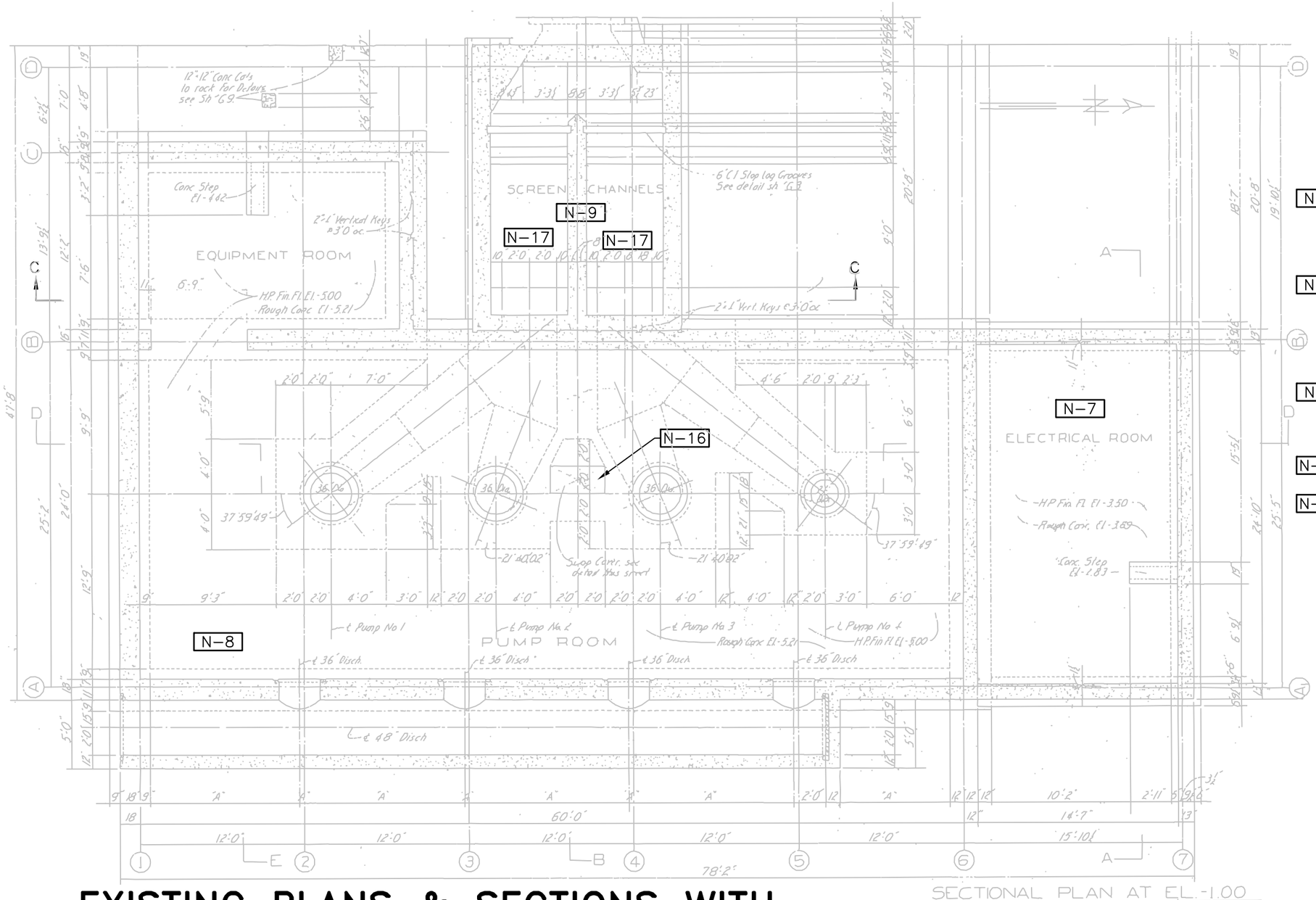

PLAN NOTES

N-7 IN-FILL OF THE EXISTING BASEMENT ELECTRICAL ROOM, SEE 1/S-18.

N-8 STRUCTURAL RELATED DESIGN FOR SETTING NEW IMMERSIBLE PUMPS AND PIPES, SEE 1/S-14 THROUGH 1/S-17.

N-9 SEE S-9 FOR PROPOSED BAR SCREEN (NOTE 2" O.C. BAR SPACING)

N-16 SUMP PUMP COVER. SEE 2/S-33.

N-17 CHAMBER INLET MODIFICATIONS WITH NEW STOP LOG GROOVES SEE 1/S-25

EXISTING PLANS & SECTIONS WITH NEW STRUCTURAL MODIFICATIONS & ADDITIONS

1 / S-6

SCALE: 1/8" = 1'-0" (NOTE EXISTING PLANS & SECTION UNDERLAY IS APPROXIMATE AND FOR LOCATION PURPOSES ONLY)

billerreinhart ENGINEERING GROUP INC.
3434 colwell avenue suite 100, tampa, florida 33614
telephone : 813.908.7203 fax : 813.931.5200
email : info@billerreinhart.com
State of Florida Certificate of Authorization No. 9149

TO THE BEST OF THE ENGINEER'S KNOWLEDGE, THE PLANS AND SPECIFICATIONS COMPLY WITH THE APPLICABLE MINIMUM BUILDING CODES

ROBERT J. REINHART
FL. P.E. NO. 50076

EDT Engineering Design Technologies Corp.
P.O. Box 152403
Tampa, FL 33684-2403
813.289.8080
813.282.9184 FAX
engineering@edt1.com
Certificate of Authorization Number: 4795

CITY of TAMPA
WASTEWATER DEPARTMENT

KRAUSE PS REHABILITATION

EXISTING PLANS WITH NEW STRUCTURAL MODIFICATION & ADDITIONS

NO.	DATE	
1	1/27/15	CONFORMED

RED LINES

NO CHANGES

DRAWN: RC, KC
DESIGN: RR
QC: RR
DATE: 06/03/14

SHEET S-6

B080-031

PLAN NOTES

N–10 THE EXISTING MANUAL SCREENS WILL BE ADDRESSED PER MECHANICAL DRAWINGS. CLEARANCE IS ADEQUATE FROM UNDERSIDE OF EXISTING ROOF STRUCTURE FOR BAR SCREENS TO BE ADDRESSED. NO MODIFICATION OF THE ROOF STRUCTURE IS PROPOSED AND/OR REQUIRED

N–11 THE EXISTING STEEL ROOF FRAMING IN THE SCREEN ROOM EXHIBITS CORROSION.

A. CLEANING / SURFACE PREPARATION PROCESS OF THE EXISTING EXPOSED STEEL FRAMING: STEEL SURFACE PREPARATION: SSPC–SP10 IS PREFERABLE; HOWEVER, RECOGNIZING THE SPACE CONSTRICTIONS AND ACCESSIBILITY ABOVE SCREENS, SSPC–SP3 WOULD BE ACCEPTABLE FOR THE AREAS THAT ARE DIFFICULT TO ACCESS.

B. MINOR STRUCTURAL STEEL REPAIR (I.E., WELDMENTS, SUPPLEMENTAL PLATES) OF FRAMING ELEMENTS MAY BE REQUIRED. TYPICAL REPAIR SUPPLEMENTAL STEEL WOULD BE ASTM A36 ¼–INCH THICK PLATE.

C. APPLICATION OF A PROTECTIVE COATING SYSTEM TO THE EXISTING EXPOSED STEEL FRAMEWORK:

1. SURFACE PREPARATION

– REMOVE ALL GREASE, OIL, DIRT, DUST, MOLD, MILDEW, AND OTHER SOLUBLE CONTAMINANTS BY HIGH PRESSURE WATER CLEANING (MINIMUM 3000 PSI, 3–5 GALLONS PER MINUTE, POTABLE WATER).

– GRIND ALL SHARP EDGES AND SEAMS SMOOTH.

– REMOVE ALL AREAS OF RUST AND RUST STAIN BY NEAR WHITE BLAST CLEANING (SSPC–SP10).

– ALL SURFACES MUST BE CLEAN AND DRY PRIOR TO THE APPLICATION OF ANY COATINGS. ALL BLASTED SURFACES MUST BE PRIMED AS SOON AS POSSIBLE THE SAME DAY TO PREVENT FLASH RUSTING OR RE–CONTAMINATION OF THE SURFACE.

2. COATING SYSTEM:

– PRIMER: TNEMEC SERIES 446 PERMA–SHIELD MCU @ 7.0–9.0 MILS DFT

– STRIPE COAT: (SPOT APPLY TO AREAS OF PITTING, WELDS, SEAMS, EDGES, AND PROTRUSIONS) TNEMEC SERIES 446 PERMA–SHIELD MCU @ 5.0–7.0 MILS DFT

– FINISH COAT: TNEMEC SERIES 446 PERMA–SHIELD MCU @ 7.0–9.0.0 MILS DFT

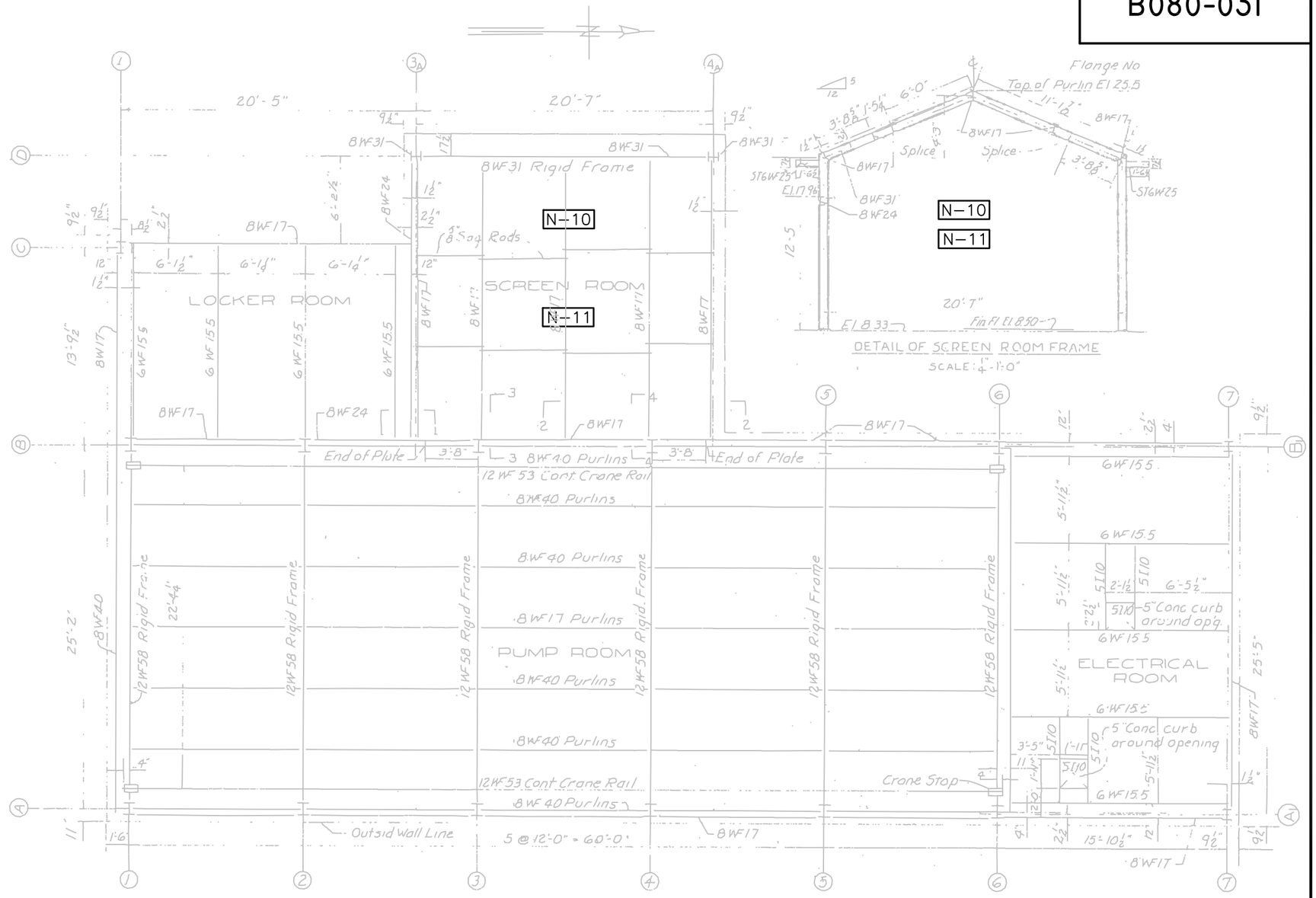

EXISTING PLANS & SECTIONS WITH NEW STRUCTURAL MODIFICATIONS & ADDITIONS

1 / S–7

SCALE: 1/8" = 1'–0" (NOTE EXISTING PLANS & SECTION UNDERLAY IS APPROXIMATE AND FOR LOCATION PURPOSES ONLY)

billerreinhart ENGINEERING GROUP INC.
3434 colwell avenue suite 100, tampa, florida 33614
telephone : 813.908.7203 fax : 813.931.5200
email : info@billerreinhart.com
State of Florida Certificate of Authorization No. 9149

TO THE BEST OF THE ENGINEER'S KNOWLEDGE THE PLANS AND SPECIFICATIONS COMPLY WITH THE APPLICABLE MINIMUM BUILDING CODES

ROBERT J. REINHART
FL. P.E. NO. 50076

EDT Engineering Design Technologies Corp.
P.O. Box 152403
Tampa, FL 33684-2403
813.289.8080
813.282.9184 FAX
engineering@edt1.com
Certificate of Authorization Number: 4795

CITY of TAMPA
WASTEWATER DEPARTMENT

KRAUSE PS REHABILITATION

EXISTING PLANS WITH NEW STRUCTURAL MODIFICATION & ADDITIONS

NO.	DATE	
1	1/27/15	CONFORMED

RED LINES

NO CHANGES

DRAWN: RC, KC
DESIGN: RR
QC: RR
DATE: 06/03/14

SHEET S-7

B080-032

PLAN NOTES

N–2 COVERING OF STAIR OPENING TO THE EXISTING BASEMENT ELECTRICAL ROOM AND ADDRESS THE EXISTING CURBING AND SUBSEQUENT SLAB REPAIRS, SEE 1/S–18

N–4 PROVIDE FOR NEW EXIT OPENING (INCLUDING DOOR AND FRAME SPECIFICATION) AND EXTERIOR STAIRS AT ELECTRICAL EQUIPMENT. DOOR AND FRAME TO CLOSELY MATCH MAIN ENTRY ON EAST ELEVATION. SEE S–28.

N–7 IN–FILL OF THE EXISTING BASEMENT ELECTRICAL ROOM, SEE 1/S–18

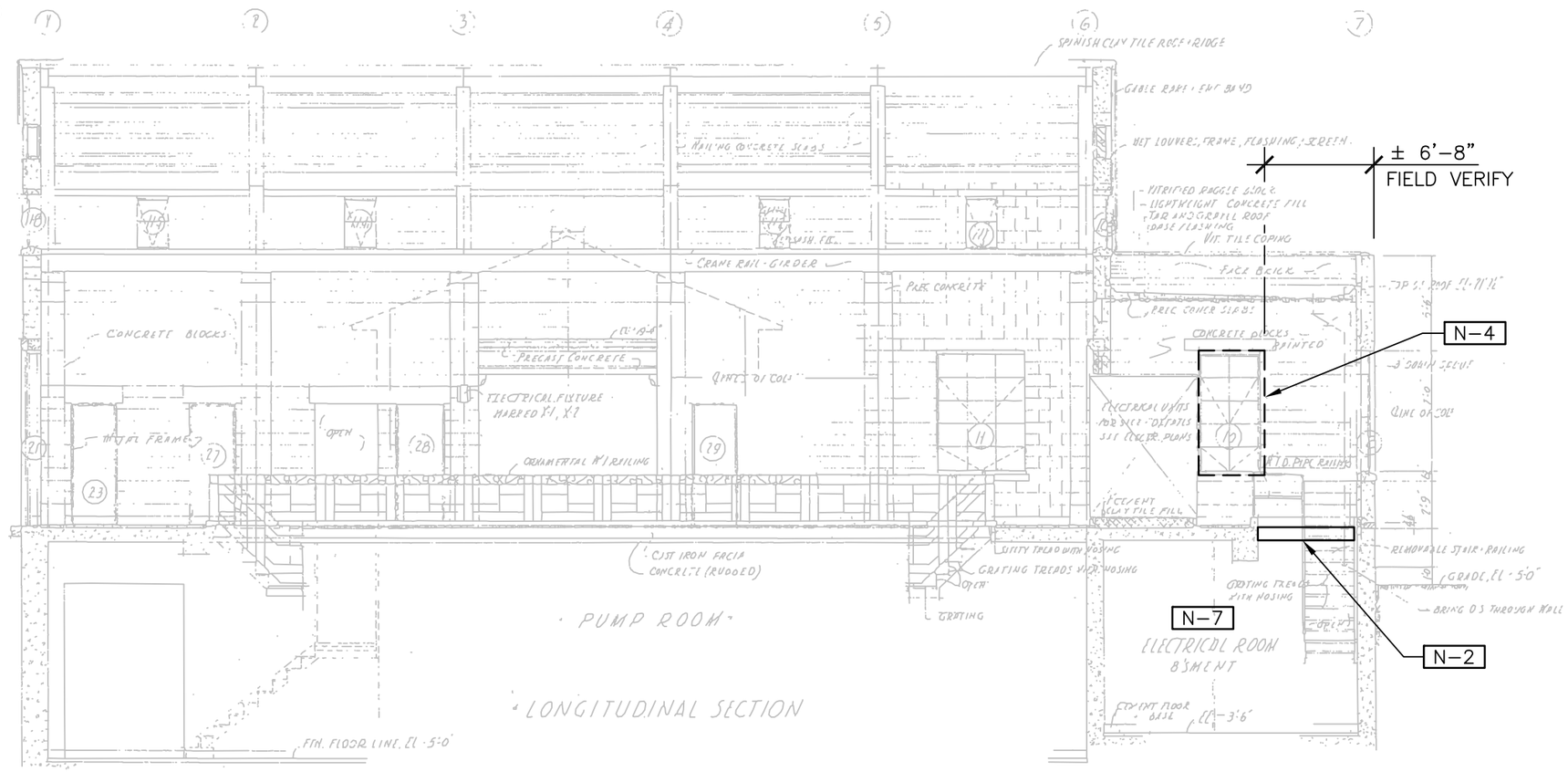

EXISTING PLANS & SECTIONS WITH NEW STRUCTURAL MODIFICATIONS & ADDITIONS

1 / S–8

SCALE: 1/8" = 1'–0" (NOTE EXISTING PLANS & SECTION UNDERLAY IS APPROXIMATE AND FOR LOCATION PURPOSES ONLY)

billerreinhart ENGINEERING GROUP INC.
3434 colwell avenue suite 100, tampa, florida 33614
telephone : 813.908.7203 fax : 813.931.5200
email : info@billerreinhart.com
State of Florida Certificate of Authorization No. 9149

TO THE BEST OF THE ENGINEER'S KNOWLEDGE, THE PLANS AND SPECIFICATIONS COMPLY WITH THE APPLICABLE MINIMUM BUILDING CODES

ROBERT J. REINHART
FL. P.E. NO. 50076

EDT
Engineering Design Technologies Corp.
P.O. Box 152403
Tampa, FL 33684-2403
813.289.8080
813.282.9184 FAX
engineering@edt1.com
Certificate of Authorization Number: 4795

CITY of TAMPA
WASTEWATER DEPARTMENT

KRAUSE PS REHABILITATION

EXISTING PLANS WITH NEW STRUCTURAL MODIFICATION & ADDITIONS

NO.	DATE	
1	1/27/15	CONFORMED

RED LINES

NO CHANGES

DRAWN: RC, KC
DESIGN: RR
QC: RR
DATE: 06/03/14

SHEET S-8

B080-033

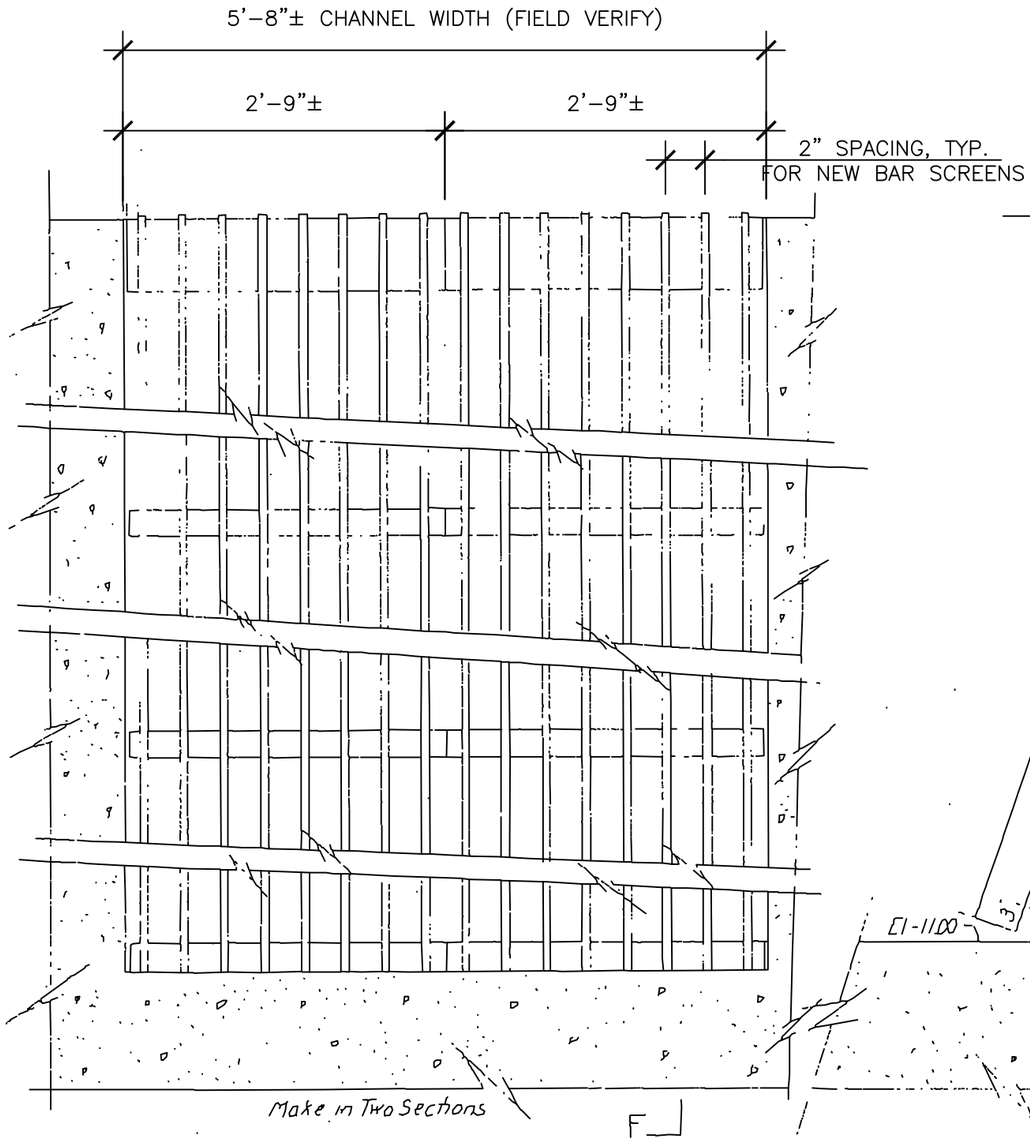

SECTION G-C

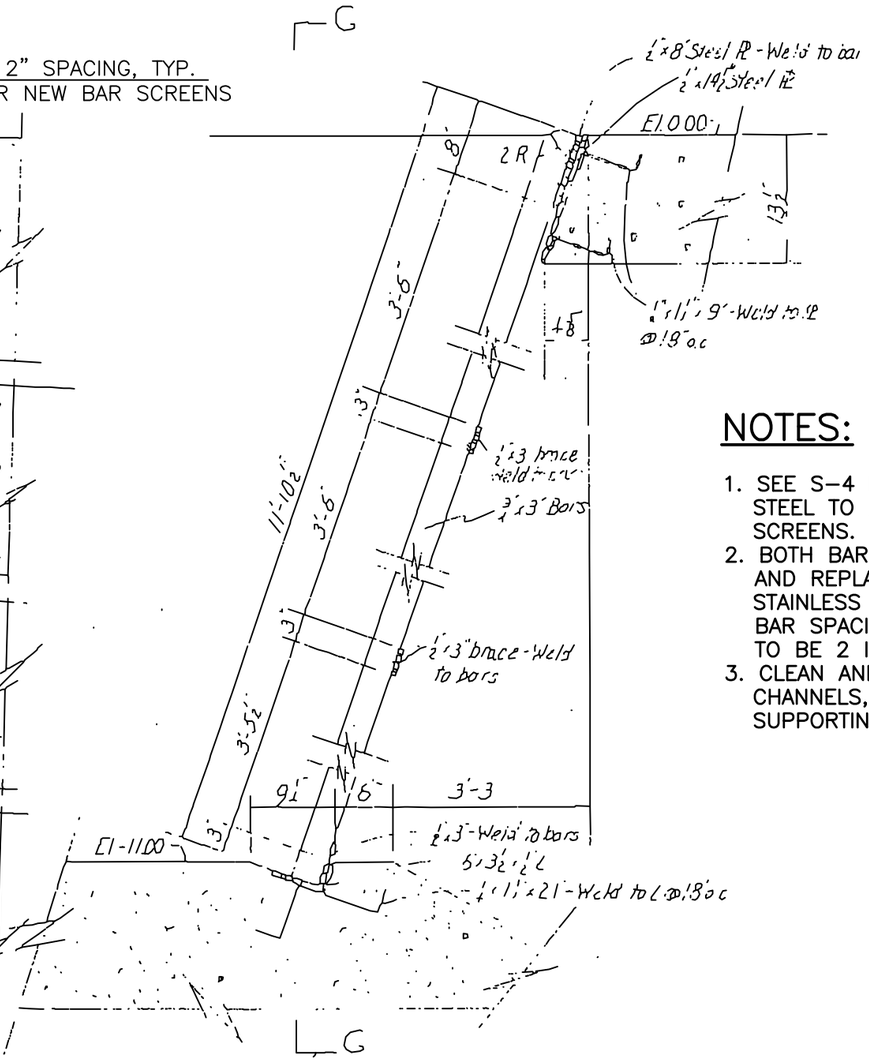

SECTION F-F

BAR SCREEN DETAILS

NOTES:

1. SEE S-4 FOR STRUCTURAL STAINLESS STEEL TO BE USED FOR NEW BAR SCREENS.
2. BOTH BAR SCREENS ARE TO BE REMOVED AND REPLACED IN KIND UTILIZING STAINLESS STEEL, EXCEPT FOR VERTICAL BAR SPACING. NEW VERTICAL BAR SPACING TO BE 2 INCHES ON CENTER
3. CLEAN AND REUSE THE EXISTING CHANNELS, PLATES AND ANGLES SUPPORTING BAR SCREENS.

1 / S-9 EXISTING BAR SCREEN DETAIL

SCALE: N.T.S.

billerreinhart ENGINEERING GROUP INC.
3434 colwell avenue suite 100, tampa, florida 33614
telephone : 813.908.7203 fax : 813.931.5200
email : info@billerreinhart.com
State of Florida Certificate of Authorization No. 9149

TO THE BEST OF THE ENGINEER'S KNOWLEDGE, THE PLANS AND SPECIFICATIONS COMPLY WITH THE APPLICABLE MINIMUM BUILDING CODES

ROBERT J. REINHART
FL. P.E. NO. 50076

EDT Engineering Design Technologies Corp.
P.O. Box 152403
Tampa, FL 33684-2403
813.289.8080
813.282.9184 FAX
engineering@edt1.com
Certificate of Authorization Number: 4795

CITY of TAMPA
WASTEWATER DEPARTMENT

KRAUSE PS REHABILITATION

EXISTING PLANS WITH NEW STRUCTURAL MODIFICATION & ADDITIONS

NO.	DATE
1	1/27/

RED LINES

NO CHANGES

DRAWN: RC, KC
DESIGN: RR
QC: RR
DATE: 06/03/14

SHEET S-9

B080-034

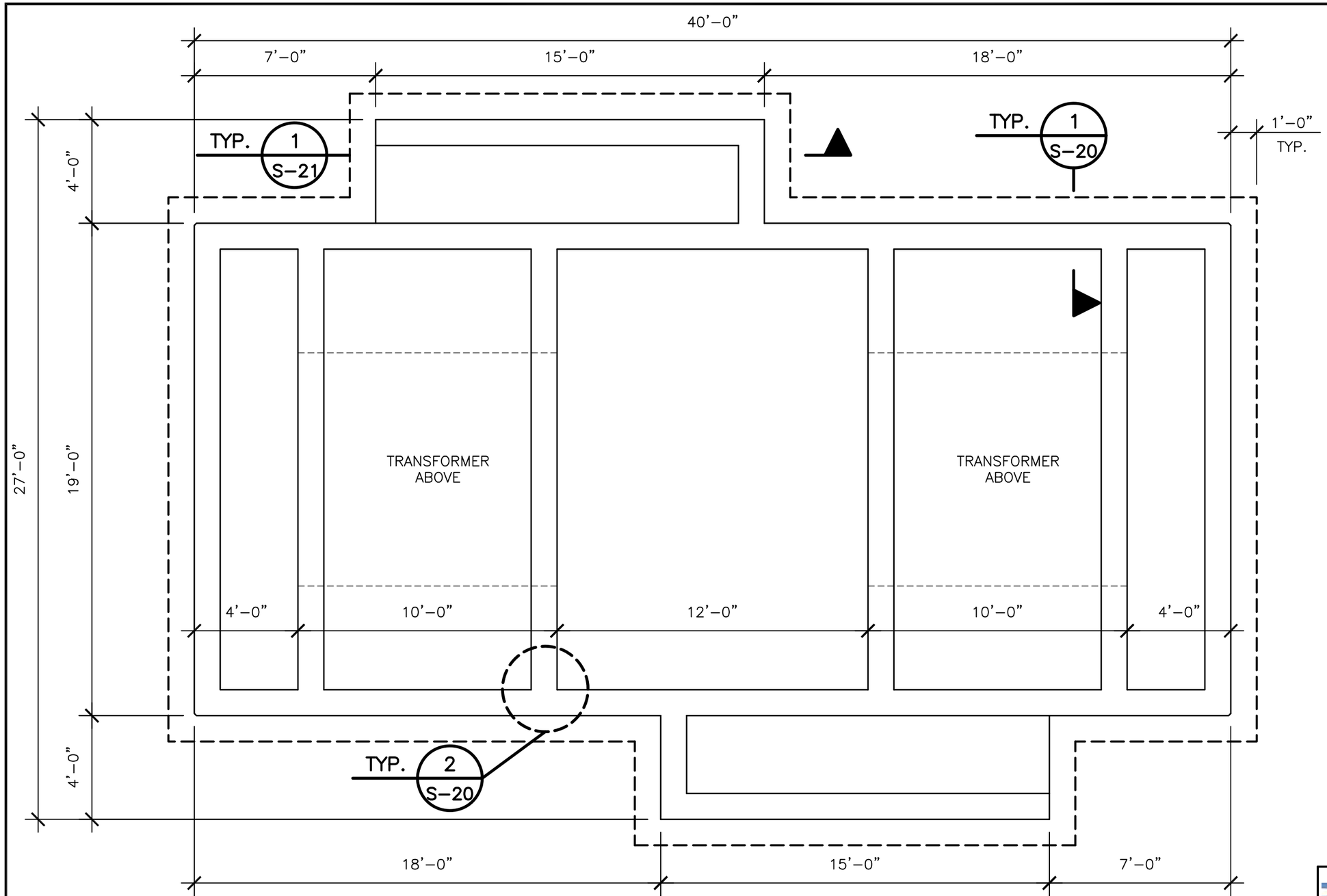

1 S-10 TRANSFORMER PLATFORM FOUNDATION PLAN

SCALE: 1/4" = 1'-0"

RED LINES

Changes
See S-10A

billerreinhart ENGINEERING GROUP INC.
3434 colwell avenue suite 100, tampa, florida 33614
ROBERT J. REINHART
FL. P.E. NO. 50076

TO THE BEST OF THE ENGINEER'S KNOWLEDGE, THE PLANS AND SPECIFICATIONS COMPLY WITH THE APPLICABLE MINIMUM BUILDING CODES

EDT Engineering Design Technologies Corp.
P.O. Box 152403
Tampa, FL 33684-2403
813.289.8080
813.282.9184 FAX
engineering@edt1.com
Certificate of Authorization Number: 4795

CITY of TAMPA
WASTEWATER DEPARTMENT

KRAUSE PS REHABILITATION

TRANSFORMER FOUNDATION PLAN

NO.	DA
1	1/2

DRAWN: RC, KC
DESIGN: RR
QC: RR
DATE: 06/03/14

SHEET S-10

B080-034

~~40'-0"~~ 33'-0"

~~7'-0"~~ 5'-4" ~~15'-0"~~ 13'-2" ~~18'-0"~~ 14'-6"

TYP. 1 S-21

TYP. 1 S-20

1'-0" TYP.

4'-0"

~~27'-0"~~ 22'-0" ~~19'-0"~~ 14'-0"

TRANSFORMER ABOVE

TRANSFORMER ABOVE

NOTE:
Stub-up electrical conduits for transformer connections prior to pouring concrete. Reference the electrical drawings for the number of conduits and sizes. Typical for each transformer.

4'-0" ~~10'-0"~~ 6'-6" 12'-0" 6'-6" ~~10'-0"~~ 4'-0"

4'-0"

WP

TYP. 2 S-20

12'-0"

4'-0"

~~15'-0"~~ 14'-6" ~~15'-0"~~ 13'-2" ~~7'-0"~~ 5'-4"

1 S-10 TRANSFORMER PLATFORM FOUNDATION PLAN

SCALE: 1/4" = 1'-0"

N

billerreinhart STRUCTURAL GROUP, INC.
3434 Colwell Avenue Suite 100, Tampa, Florida 33614
telephone: 813.908.7203 fax: 813.931.5200
email: info@billerreinhart.com
State of Florida Certificate of Authorization No. 9149

ROBERT J. REINHART
FL. P.E. NO. 50076

EDT Engineering Design Technologies Corp.
P.O. Box 152403
Tampa, FL 33684-2403
813.289.8080
813.282.9184 FAX
engineering@edt1.com
Certificate of Authorization Number: 4795

CITY of TAMPA
WASTEWATER DEPARTMENT

KRAUSE

TRANSFORI

RED LINES

DRAWN: RC, KC
DESIGN: RR
QC: RR
DATE: 06/03/14

Sheet S-10A

Revised S-10

B080-035

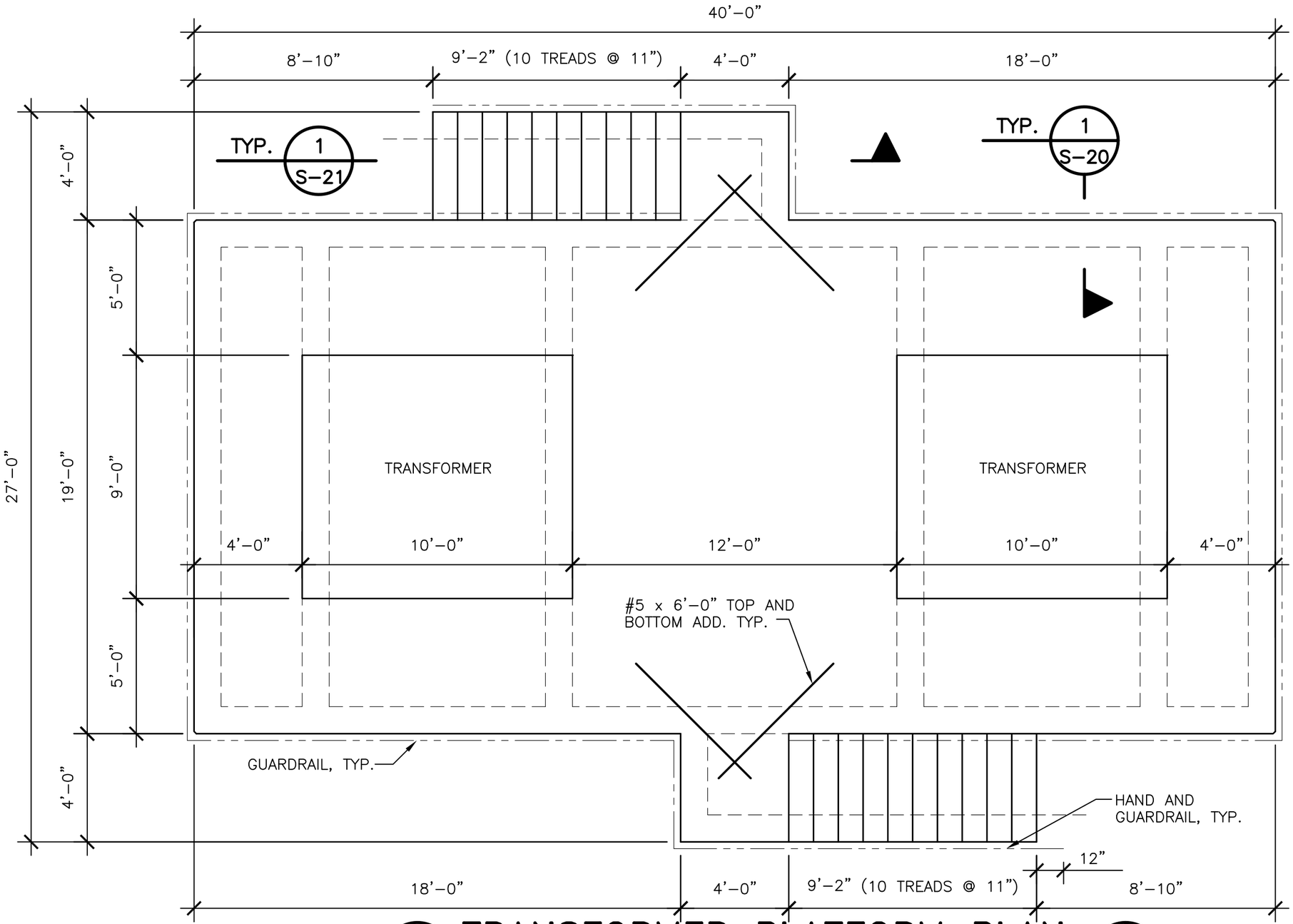

1 / S-11 TRANSFORMER PLATFORM PLAN

SCALE: 1/4" = 1'-0"

N

billerreinhart ENGINEERING GROUP INC.
3434 colwell avenue suite 100, tampa, florida 33614
telephone : 813.908.7203 fax : 813.931.5200

TO THE BEST OF THE ENGINEER'S KNOWLEDGE, THE PLANS AND SPECIFICATIONS COMPLY WITH THE APPLICABLE MINIMUM BUILDING CODES

No. 9149

ROBERT J. REINHART
FL. P.E. NO. 50076

RED LINES

Changes
See S-11A

Engineering Design Technologies Corp.
P.O. Box 152403
Tampa, FL 33684-2403
813.289.8080
813.282.9184 FAX
engineering@edt1.com

Certificate of Authorization Number: 4795

CITY of TAMPA
WASTEWATER DEPARTMENT

KRAUSE PS REHABILITATION

TRANSFORMER PLATFORM PLAN

NO.	DAT
1	1/27/

DRAWN: RC, KC
DESIGN: RR
QC: RR
DATE: 06/03/14

SHEET S-11

B080-035

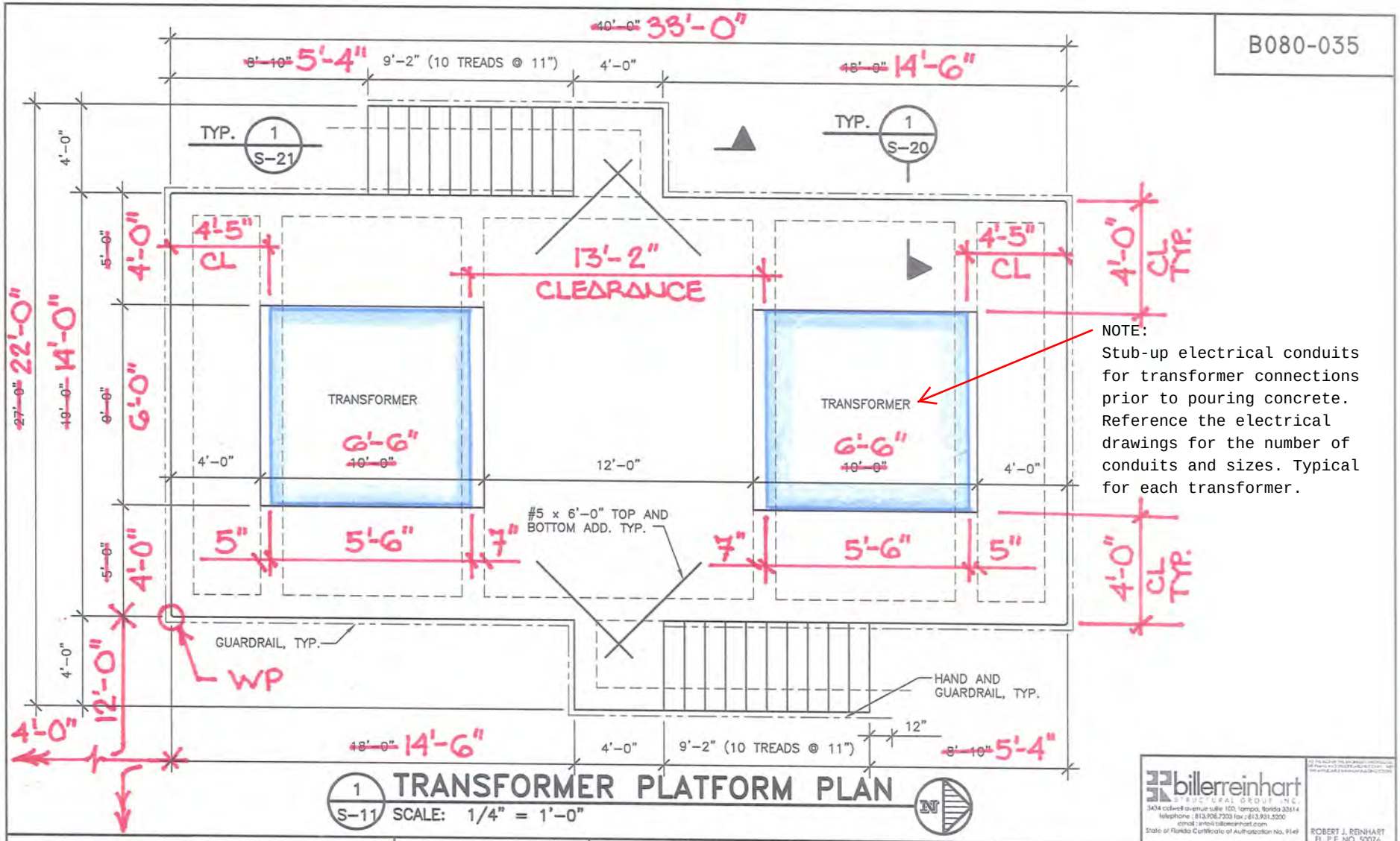

NOTE:
Stub-up electrical conduits for transformer connections prior to pouring concrete. Reference the electrical drawings for the number of conduits and sizes. Typical for each transformer.

1 S-11 TRANSFORMER PLATFORM PLAN
SCALE: 1/4" = 1'-0"

billerreinhart STRUCTURAL GROUP, INC.
3434 Colwell Avenue Suite 100, Tampa, Florida 33614
telephone: 813.908.7303 fax: 813.931.5200
email: info@billerreinhart.com
State of Florida Certificate of Authorization No. 9149
ROBERT J. REINHART FL. P.E. NO. 50076

EDT Engineering Design Technologies Corp.
P.O. Box 152403
Tampa, FL 33684-2403
813.289.8080
813.282.9184 FAX
engineering@edt1.com
Certificate of Authorization Number: 4795

CITY of TAMPA
WASTEWATER DEPARTMENT

KRAUSE PS REHABILITATION
TRANSF

DRAWN: RC, KC
DESIGN: RR
QC: RR
DATE: 06/03/14

RED LINES

Sheet S-11A

Revised S-11

B080-036

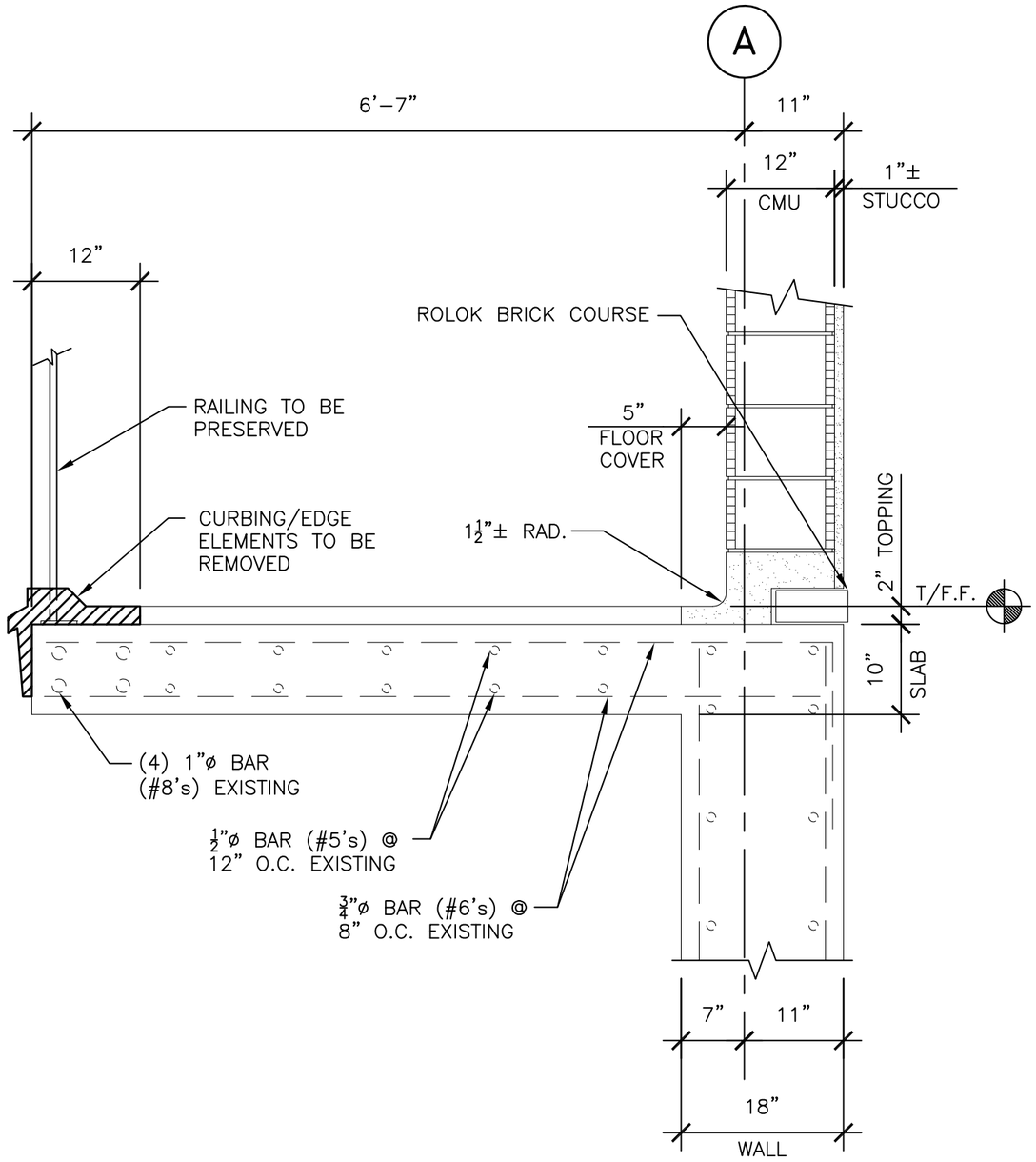

1 / S-12 EXISTING PLATFORM DEMOLITION SECTION

SCALE: 3/4" = 1'-0"

billerreinhart ENGINEERING GROUP INC.
3434 colwell avenue suite 100, tampa, florida 33614
telephone : 813.908.7203 fax : 813.931.5200
email : info@billerreinhart.com
State of Florida Certificate of Authorization No. 9149

TO THE BEST OF THE ENGINEER'S KNOWLEDGE, THE PLANS AND SPECIFICATIONS COMPLY WITH THE APPLICABLE MINIMUM BUILDING CODES

ROBERT J. REINHART
FL. P.E. NO. 50076

EDT
Engineering Design Technologies Corp.
P.O. Box 152403
Tampa, FL 33684-2403
813.289.8080
813.282.9184 FAX
engineering@edt1.com
Certificate of Authorization Number: 4795

CITY of TAMPA
WASTEWATER DEPARTMENT

KRAUSE PS REHABILITATION

SECTIONS & DETAILS

RED LINES

NO.	DAT
1	1/27/

NO CHANGES

DRAWN: RC, KC
DESIGN: RR
QC: RR
DATE: 06/03/14

SHEET S-12

B080-037

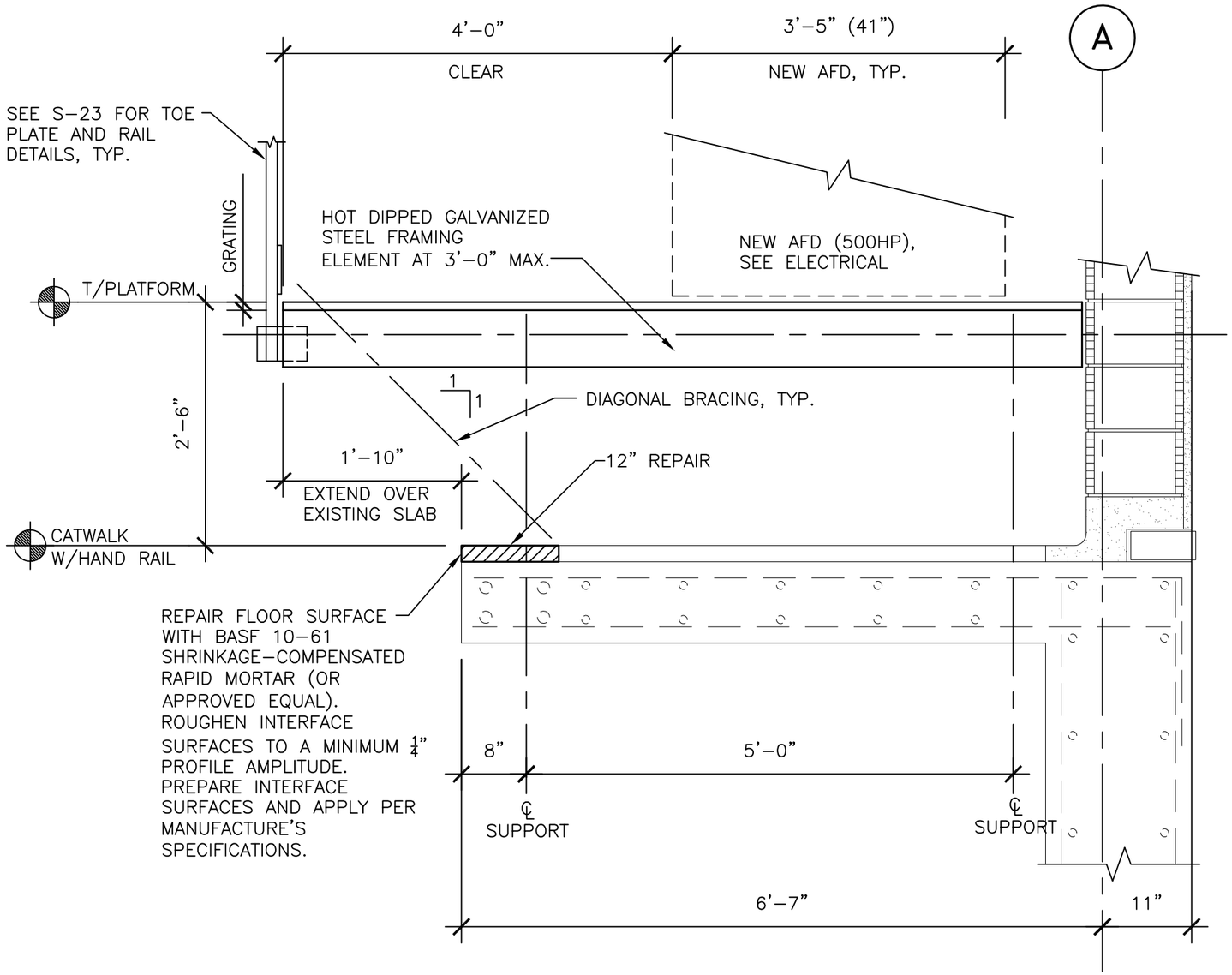

INTERIOR ELEVATED ELECTRICAL PLATFORM

1. SEE DRAWING S-3 AND S-4 FOR HOT DIPPED GALVANIZED WELDED STEEL GRATING SPECIFICATIONS.
2. SEE DRAWING S-4 FOR STRUCTURAL STEEL SPECIFICATIONS.
3. SEE DRAWING S-22 FOR STEEL STAIRS
4. SEE DRAWING S-23 FOR PIPE HANDRAIL
5. MAXIMUM SPAN (SPACING OF SUPPORTING STEEL ELEMENTS) OF GRATING IS 3'-0". MAXIMUM SUPERIMPOSED LIVE LOAD IS 150 PSF (AREAS AROUND AFD'S).
6. AFD'S ARE APPROXIMATELY 5000 LBS EACH.
7. THE CONTRACTOR SHALL SUBMIT SHOP DRAWINGS FOR REVIEW AND APPROVAL PRIOR TO FABRICATION.
   SHOP DRAWINGS ARE TO SHOW COMPLETE LAYOUT; PLAN VIEWS, ELEVATIONS, CONNECTIONS, DETAILS FOR FABRICATION AND ATTACHMENT TO OTHER ELEMENTS, AND OTHER INSTALLATION DETAILS. INCLUDE CALCULATIONS AND MEASUREMENTS SIGNED AND SEALED BY A FLORIDA REGISTERED PROFESSIONAL ENGINEER RESPONSIBLE FOR THE SYSTEMS' STRUCTURAL DESIGN.
8. COORDINATE PLATFORM PLAN CONFIGURATION WITH DRAWING E-6. LOCATION OF STAIRS, FINAL DIMENSION REQUIREMENTS, ELECTRICAL COMPONENTS, ETC., SHALL BE COORDINATED WITH MECHANICAL AND ELECTRICAL DRAWINGS.

1 / S-13 NEW PLATFORM SECTION

SCALE: 3/4" = 1'-0"

billerreinhart ENGINEERING GROUP INC.
3434 colwell avenue suite 100, tampa, florida 33614
telephone : 813.908.7203 fax : 813.931.5200
email : info@billerreinhart.com
State of Florida Certificate of Authorization No. 9149

TO THE BEST OF THE ENGINEER'S KNOWLEDGE, THE PLANS AND SPECIFICATIONS COMPLY WITH THE APPLICABLE MINIMUM BUILDING CODES

ROBERT J. REINHART
FL. P.E. NO. 50076

EDT Engineering Design Technologies Corp.
P.O. Box 152403
Tampa, FL 33684-2403
813.289.8080
813.282.9184 FAX
engineering@edt1.com
Certificate of Authorization Number: 4795

CITY of TAMPA
WASTEWATER DEPARTMENT

KRAUSE PS REHABILITATION

SECTIONS & DETAILS

NO.	DAT
1	1/27/

RED LINES

NO CHANGES

DRAWN: RC, KC
DESIGN: RR
QC: RR
DATE: 06/03/14

SHEET S-13

B080-038

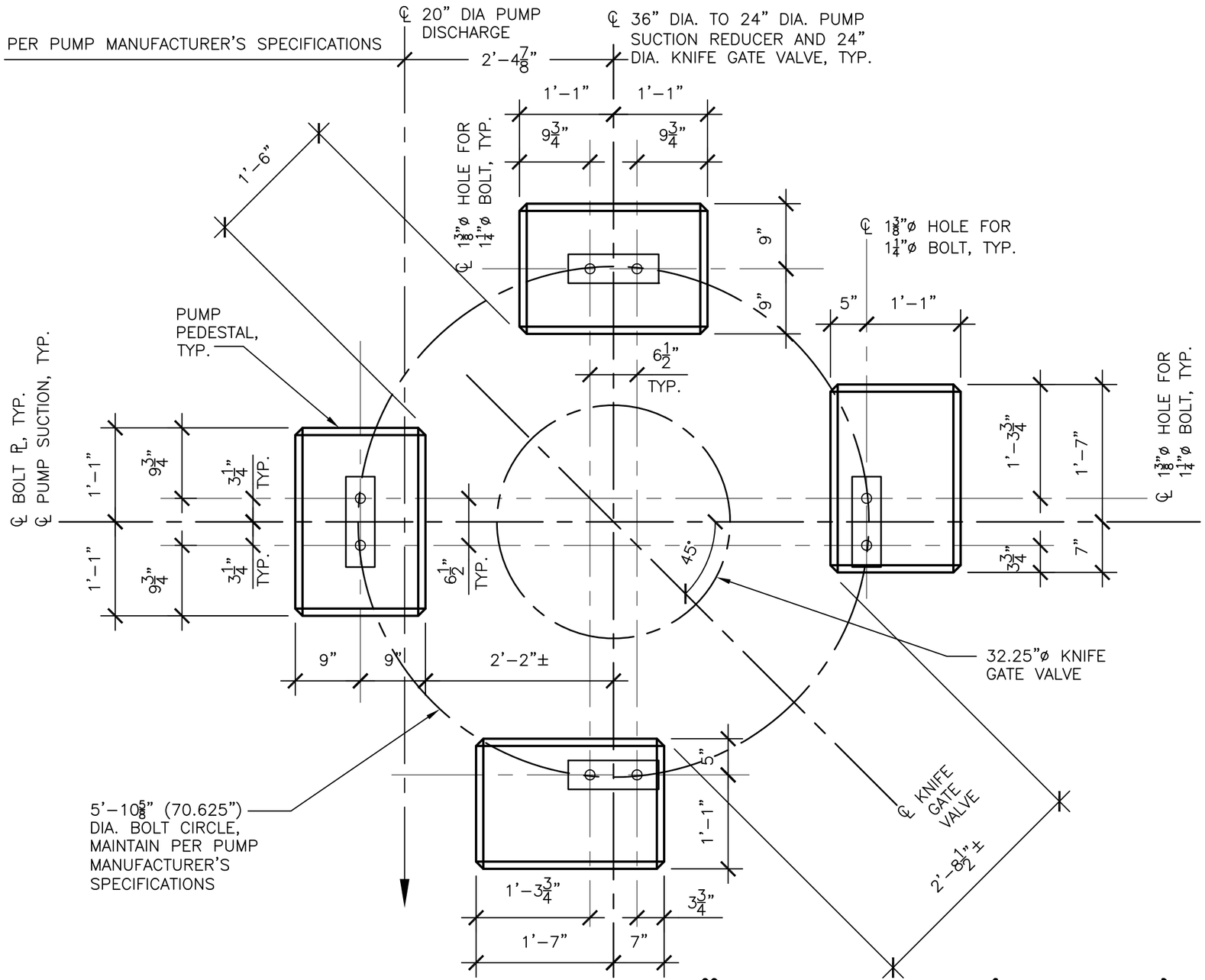

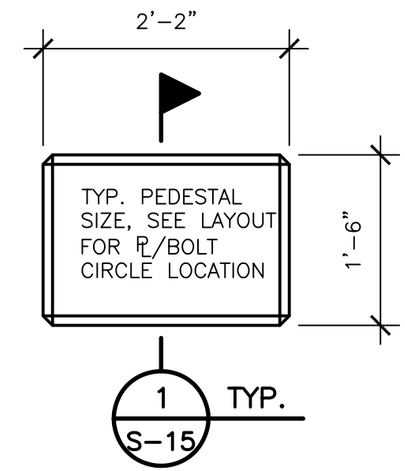

STAINLESS STEEL BOLTS NOTES:

1. ALL BOLTS SHALL CONFORM TO ASTM F593 STAINLESS STEEL SPECIFICATION, ALLOY TYPE 316, ¾ INCH DIAMETER, UNLESS NOTED OTHERWISE.
2. ALL NUTS AND WASHERS SHALL CONFORM TO ASTM F594 STAINLESS STEEL SPECIFICATION, ALLOY TYPE 316, UNLESS NOTED OTHERWISE.

1 / S-14 SETTING PLAN – BASIC PUMP 20" IM2434WD (350 HP)

SCALE: 3/4" = 1'-0"

billerreinhart ENGINEERING GROUP INC.

TO THE BEST OF THE ENGINEER'S KNOWLEDGE, THE PLANS AND SPECIFICATIONS COMPLY WITH THE APPLICABLE MINIMUM BUILDING CODES

ROBERT J. REINHART
FL. P.E. NO. 50076

RED LINES

Changes
See S-14A

EDT Engineering Design Technologies Corp.
P.O. Box 152403
Tampa, FL 33684-2403
813.289.8080
813.282.9184 FAX
engineering@edt1.com
Certificate of Authorization Number: 4795

CITY of TAMPA
WASTEWATER DEPARTMENT

KRAUSE PS REHABILITATION

SECTIONS & DETAILS

NO.	DATE
1	1/27/15

DRAWN: RC, KC
DESIGN: RR
QC: RR
DATE: 06/03/14

SHEET S-14

B080-038

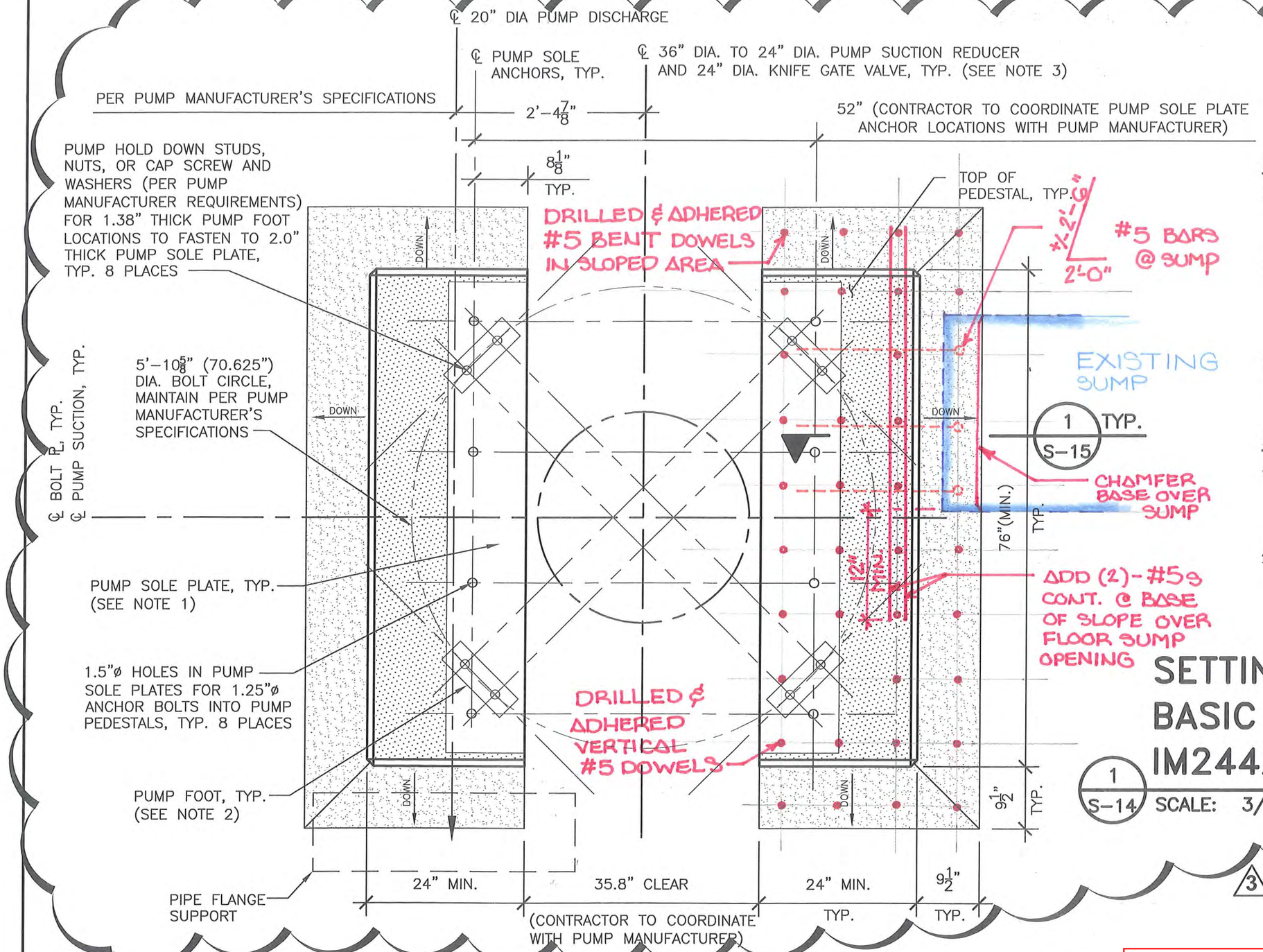

PLAN NOTES:

1. CONTRACTOR SHALL CLOSELY COORDINATE SOLE PLATE AND ANCHOR BOLTS WITH PUMP MANUFACTURER.
2. CONTRACTOR SHALL CLOSELY COORDINATE LOCATIONS OF PUMP FOOT PLATES WITH PUMP MANUFACTURER, INSTALLATION OF KNIFE GATE VALVE AND NEW PUMP SUCTION TUBES.
3. CONTRACTOR SHALL CLOSELY COORDINATE LOCATION OF PIERS FOR CLEARANCES OF PUMP SUCTION REDUCERS AND KNIFE GATE VALVES.

STAINLESS STEEL BOLTS NOTES:

1. ALL BOLTS SHALL CONFORM TO ASTM F593 STAINLESS STEEL SPECIFICATION, ALLOY TYPE 316, ¾ INCH DIAMETER, UNLESS NOTED OTHERWISE.
2. ALL NUTS AND WASHERS SHALL CONFORM TO ASTM F594 STAINLESS STEEL SPECIFICATION, ALLOY TYPE 316, UNLESS NOTED OTHERWISE.

SETTING PLAN BASIC PUMP 20" IM2442WD (400 HP)

1 / S-14 SCALE: 3/4" = 1'-0"

N

TO THE BEST OF THE ENGINEER'S KNOWLEDGE THE PLANS AND SPECIFICATIONS COMPLY WITH THE APPLICABLE MINIMUM BUILDING CODES

billerreinhart ENGINEERING GROUP INC.
3434 colwell avenue suite 100, tampa, florida 33614
telephone : 813.908.7203 fax : 813.931.5200
email : info@billerreinhart.com
State of Florida Certificate of Authorization No. 9149

ROBERT J. REINHART
FL. P.E. NO. 50076

EDT Engineering Design Technologies Corp.
P.O. Box 152403
Tampa, FL 33684-2403
813.289.8080
813.282.9184 FAX
engineering@edt1.com
Certificate of Authorization Number: 4795

CITY of TAMPA
WASTEWATER DEPARTMENT

KRAUSE PS REHABILITATION

SECTIONS & DETAILS

RED LINES

NO.	DATE	REVISIONS
3	3/18/16	PUMP MODIFICATIONS
2	4/10/	PLATE
1	1/27/	

Revised S-14

DRAWN: RC, KC
DESIGN: RR
QC: RR
DATE: 05/01/14

Sheet S-14A

B080-039

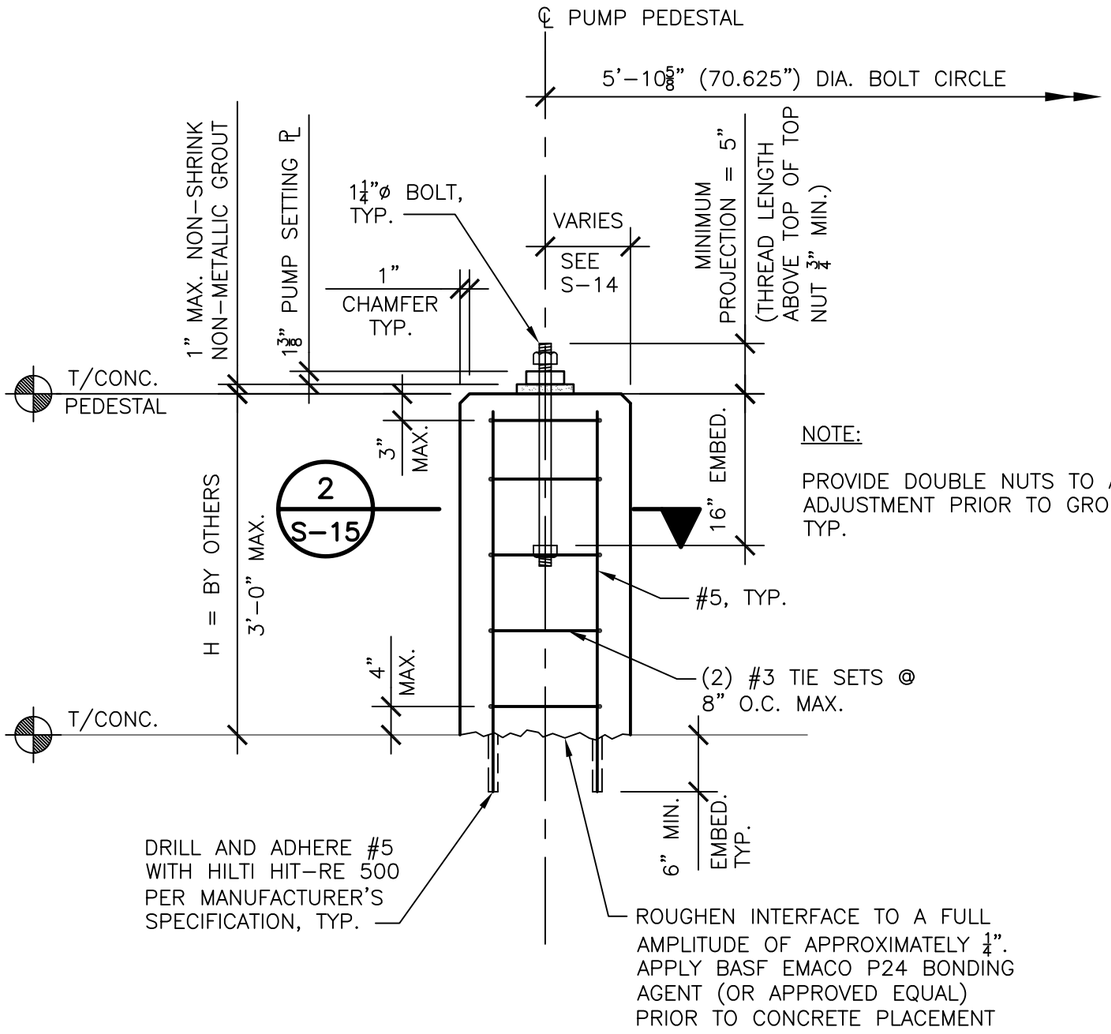

NOTE:

PROVIDE DOUBLE NUTS TO ALLOW ADJUSTMENT PRIOR TO GROUTING, TYP.

1 / S–15 SECTION – PUMP PEDESTAL

SCALE: 3/4" = 1'–0"

STAINLESS STEEL BOLTS NOTES:

1. ALL BOLTS SHALL CONFORM TO ASTM F593 STAINLESS STEEL SPECIFICATION, ALLOY TYPE 316, ¾ INCH DIAMETER, UNLESS NOTED OTHERWISE.
2. ALL NUTS AND WASHERS SHALL CONFORM TO ASTM F594 STAINLESS STEEL SPECIFICATION, ALLOY TYPE 316, UNLESS NOTED OTHERWISE.

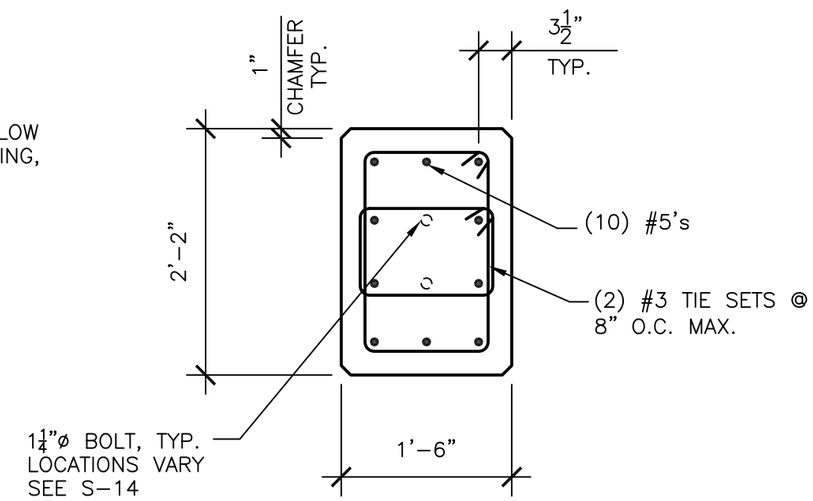

2 / S–15 SECTION – PUMP PEDESTAL

SCALE: 3/4" = 1'–0"

billerreinhart ENGINEERING GROUP INC.
3434 colwell avenue suite 100, tampa, florida 33614
telephone : 813.908.7203 fax : 813.931.5200

TO THE BEST OF THE ENGINEER'S KNOWLEDGE, THE PLANS AND SPECIFICATIONS COMPLY WITH THE APPLICABLE MINIMUM BUILDING CODES

149 ROBERT J. REINHART FL. P.E. NO. 50076

RED LINES

Changes See S-15A

Engineering Design Technologies Corp.
P.O. Box 152403
Tampa, FL 33684-2403
813.289.8080
813.282.9184 FAX
engineering@edt1.com
Certificate of Authorization Number: 4795

CITY of TAMPA
WASTEWATER DEPARTMENT

KRAUSE PS REHABILITATION

SECTIONS & DETAILS

NO.	DATE
1	1/27/15

DRAWN: RC, KC
DESIGN: RR
QC: RR
DATE: 06/03/14

SHEET S-15

B080-039

STAINLESS STEEL BOLTS NOTES:

1. ALL BOLTS SHALL CONFORM TO ASTM F593 STAINLESS STEEL SPECIFICATION, ALLOY TYPE 316, ¾ INCH DIAMETER, UNLESS NOTED OTHERWISE.
2. ALL NUTS AND WASHERS SHALL CONFORM TO ASTM F594 STAINLESS STEEL SPECIFICATION, ALLOY TYPE 316, UNLESS NOTED OTHERWISE.

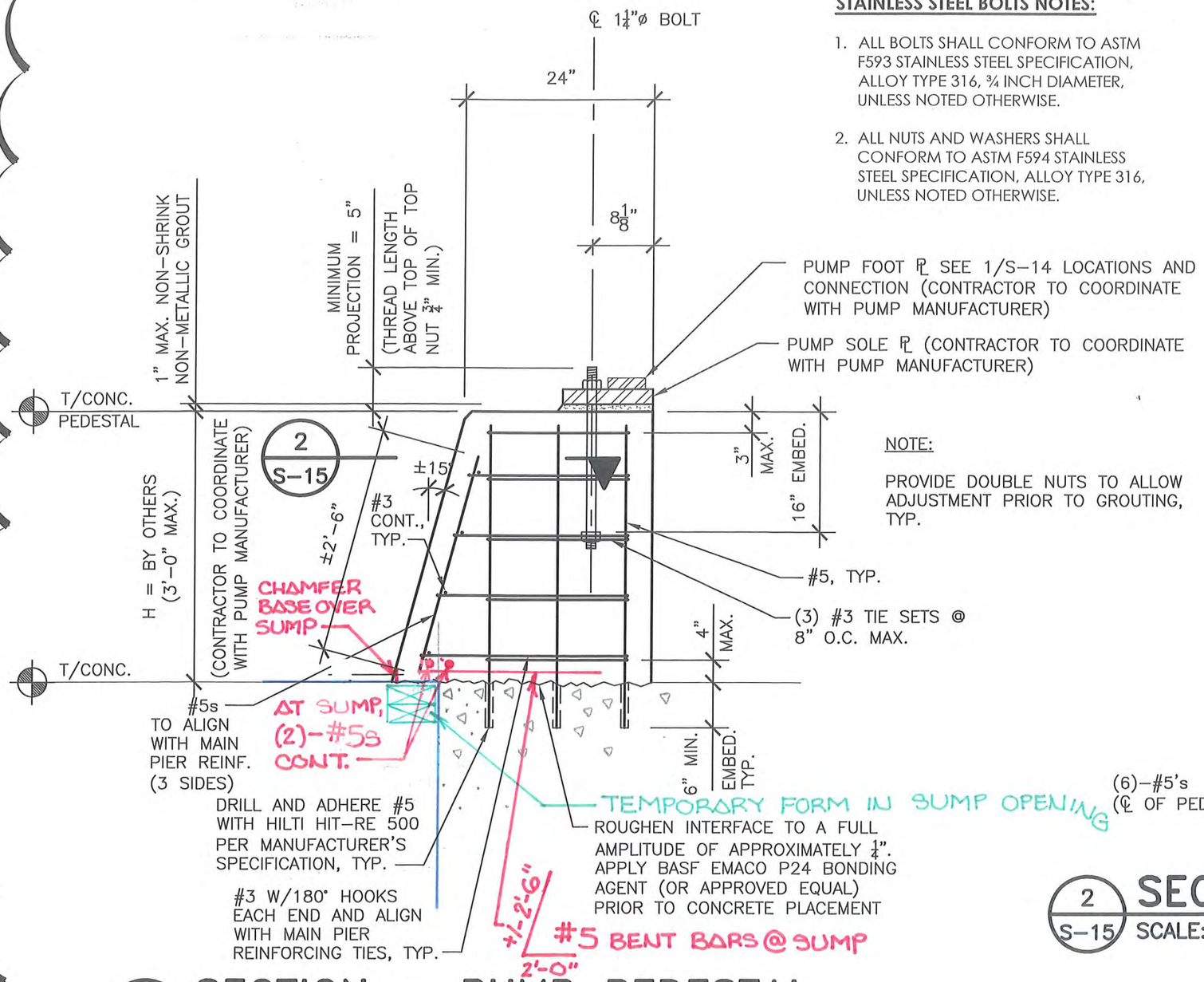

1 S-15 SECTION – PUMP PEDESTAL
SCALE: 3/4" = 1'-0"

NOTE:

PROVIDE DOUBLE NUTS TO ALLOW ADJUSTMENT PRIOR TO GROUTING, TYP.

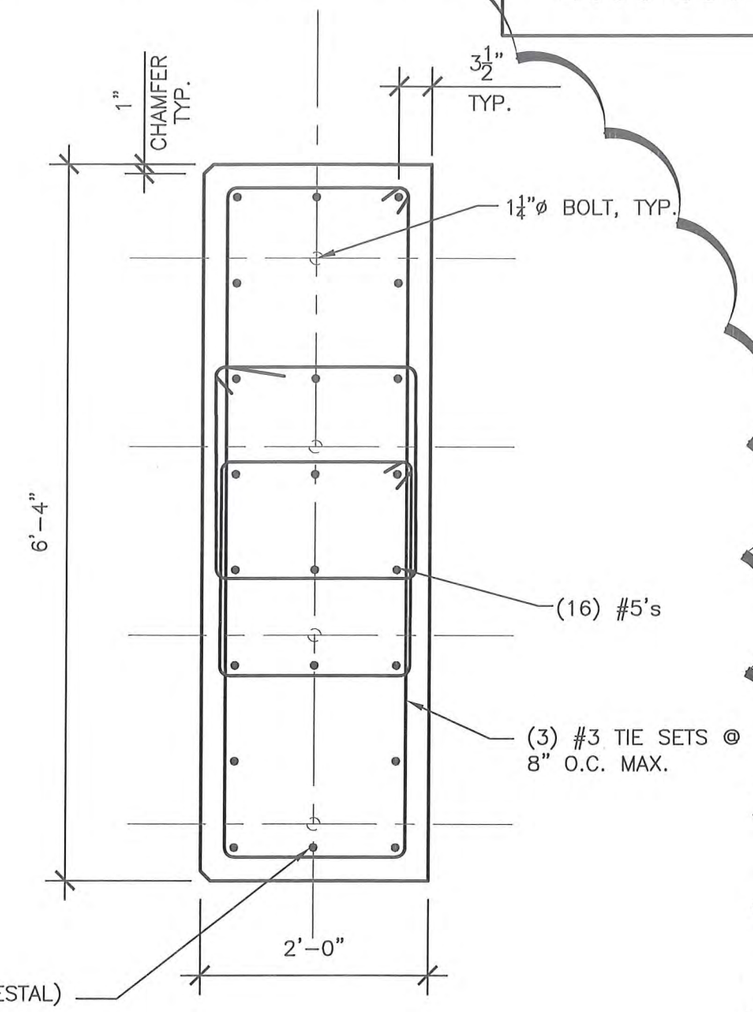

2 S-15 SECTION – PUMP PEDESTAL
SCALE: 3/4" = 1'-0"

3

billerreinhart ENGINEERING GROUP INC.
3434 colwell avenue suite 100, tampa, florida 33614
telephone : 813.908.7203 fax : 813.931.5200
email : info@billerreinhart.com
State of Florida Certificate of Authorization No. 9149

TO THE BEST OF THE ENGINEER'S KNOWLEDGE THE PLANS AND SPECIFICATIONS COMPLY WITH THE APPLICABLE MINIMUM BUILDING CODES

ROBERT J. REINHART
FL. P.E. NO. 50076

EDT Engineering Design Technologies Corp.
P.O. Box 152403
Tampa, FL 33684-2403
813.289.8080
813.282.9184 FAX
engineering@edt1.com
Certificate of Authorization Number: 4795

CITY of TAMPA
WASTEWATER DEPARTMENT

KRAUSE PS REHABILITATION

SECTIONS & DETAILS

NO.	DATE	
2	4/10/15	PUMP PIERS FOR ADDED SOLE PLATE
1	1/27/1	

RED LINES

Revised S-15

Sheet S-15A

DRAWN:	RC, KC
DESIGN:	RR
QC:	RR
DATE:	05/01/14

B080-040

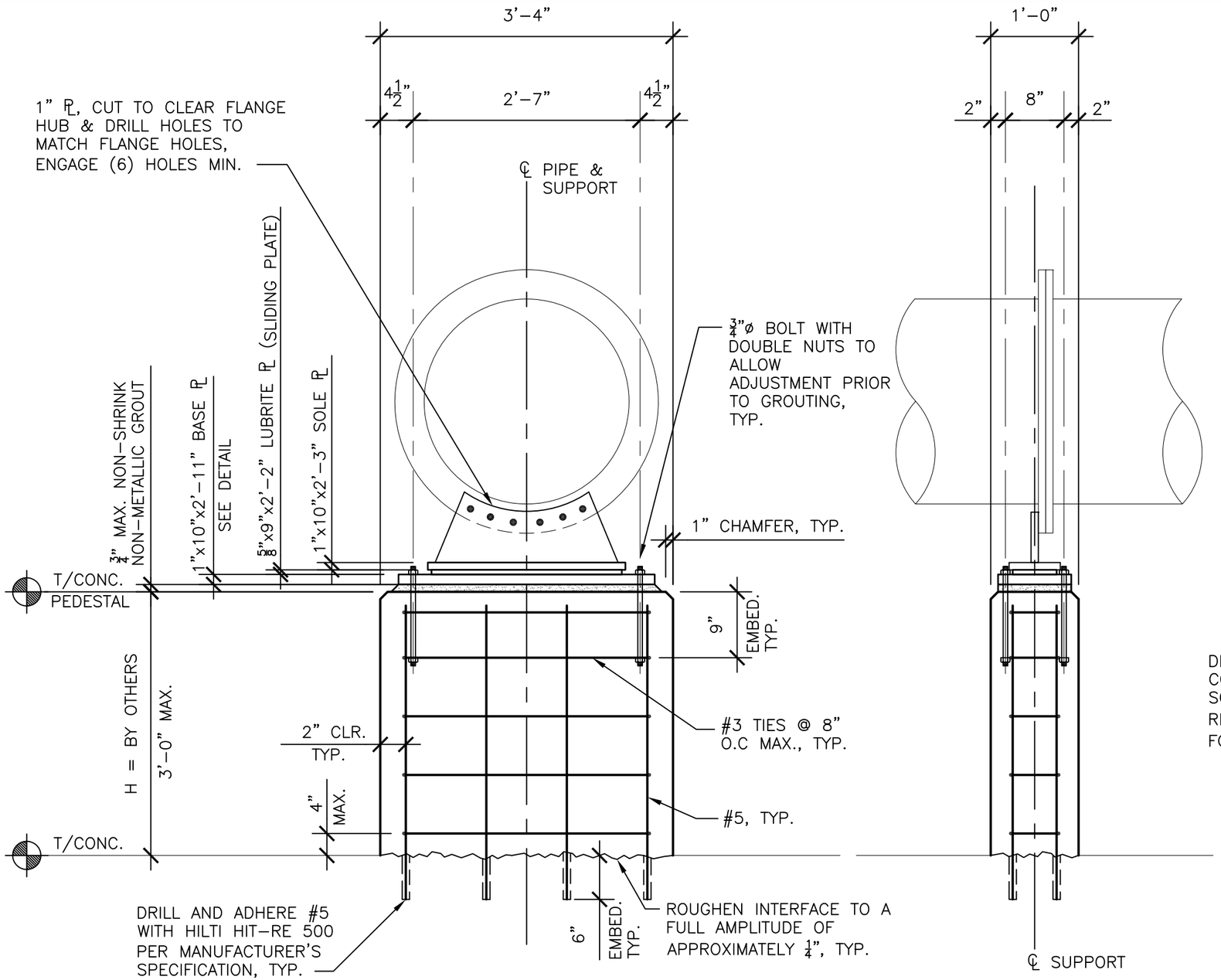

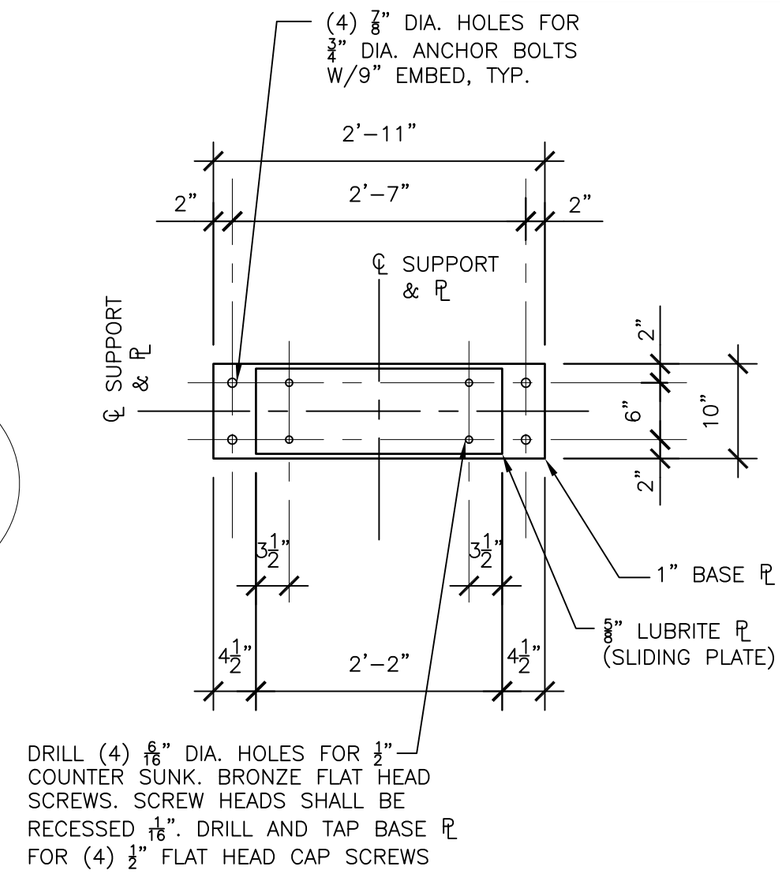

BASE PLATE DETAIL

STAINLESS STEEL BOLTS NOTES:

1. ALL BOLTS SHALL CONFORM TO ASTM F593 STAINLESS STEEL SPECIFICATION, ALLOY TYPE 316, ¾ INCH DIAMETER, UNLESS NOTED OTHERWISE.
2. ALL NUTS AND WASHERS SHALL CONFORM TO ASTM F594 STAINLESS STEEL SPECIFICATION, ALLOY TYPE 316, UNLESS NOTED OTHERWISE.

1 / S-16 PIPE FLANGE SUPPORT DETAIL-SADDLE SUPPORT TYPE A

SCALE: 3/4" = 1'-0"

NOTE: SEE M-3.

billerreinhart ENGINEERING GROUP INC.
3434 colwell avenue suite 100, tampa, florida 33614
telephone : 813.908.7203 fax : 813.931.5200
email : info@billerreinhart.com
State of Florida Certificate of Authorization No. 9149

TO THE BEST OF THE ENGINEER'S KNOWLEDGE, THE PLANS AND SPECIFICATIONS COMPLY WITH THE APPLICABLE MINIMUM BUILDING CODES

ROBERT J. REINHART
FL. P.E. NO. 50076

EDT Engineering Design Technologies Corp.
P.O. Box 152403
Tampa, FL 33684-2403
813.289.8080
813.282.9184 FAX
engineering@edt1.com
Certificate of Authorization Number: 4795

CITY of TAMPA
WASTEWATER DEPARTMENT

KRAUSE PS REHABILITATION

SECTIONS & DETAILS

NO.	DAT	CONCURRED
1	1/27/	

RED LINES

NO CHANGES

DRAWN: RC, KC
DESIGN: RR
QC: RR
DATE: 06/03/14

SHEET S-16

B080-041

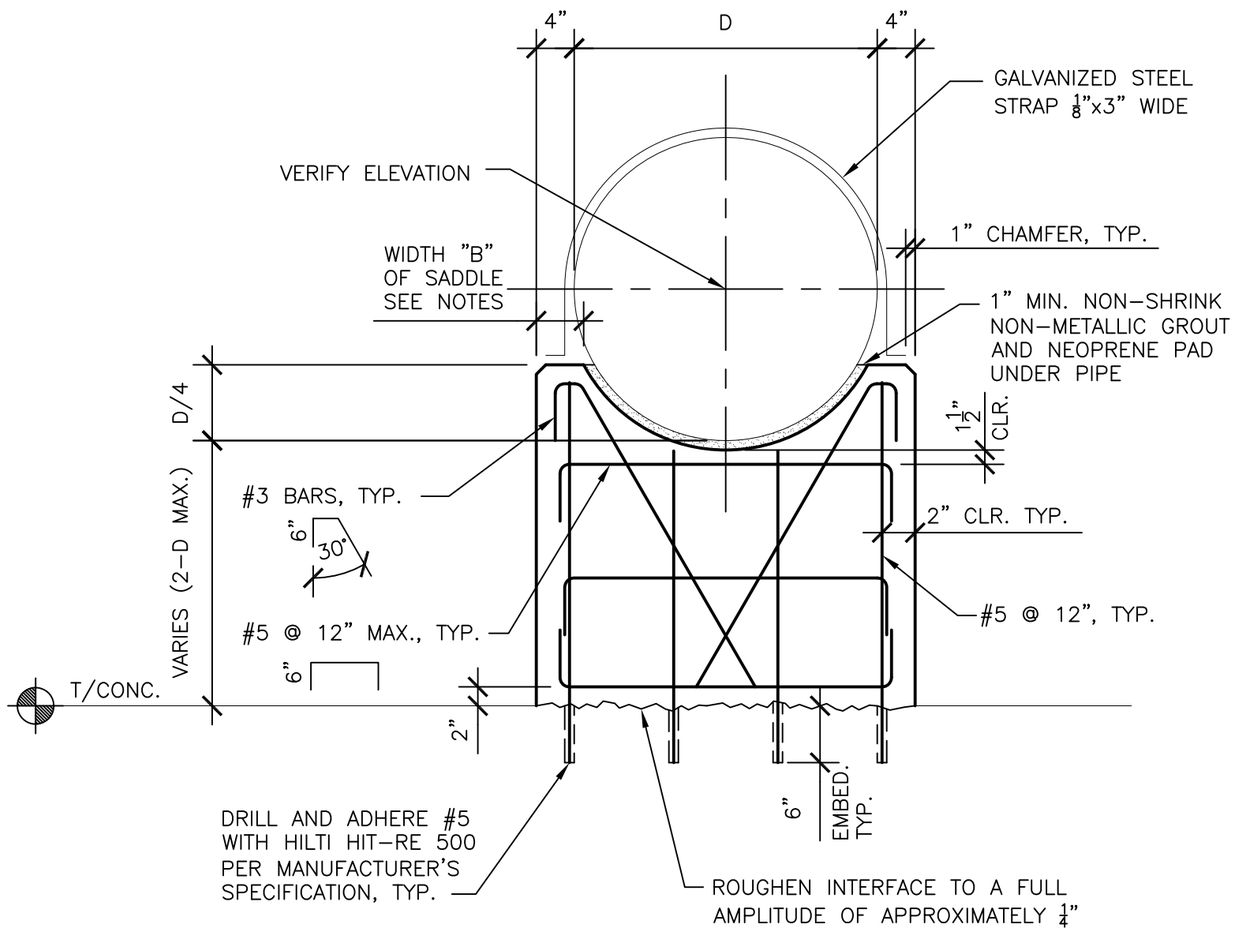

NOTES:

1. THICKNESS "B" OF SADDLE
   B = 6" WHEN: D < 12"
   B = 8" WHEN: 12" < D < 24"
   B = 10" WHEN: 24" < D < 36"
   B = 12" WHEN: 36" < D < 48"

2. FOR "B" = 10 OR THICKER, USE 2 LAYERS OF REINFORCING, TURN HORIZONTAL BARS 90° TO HOOK AROUND VERTICAL 1 1/2" CLEAR OF CONCRETE.

1 / S-17 CONCRETE PIPE SADDLE DETAIL-SADDLE SUPPORT TYPE B

SCALE: N.T.S.

NOTE: SEE M-3.

billerreinhart ENGINEERING GROUP INC.
3434 colwell avenue suite 100, tampa, florida 33614
telephone : 813.908.7203 fax : 813.931.5200
email : info@billerreinhart.com
State of Florida Certificate of Authorization No. 9149

TO THE BEST OF THE ENGINEER'S KNOWLEDGE THE PLANS AND SPECIFICATIONS COMPLY WITH THE APPLICABLE MINIMUM BUILDING CODES

ROBERT J. REINHART
FL. P.E. NO. 50076

EDT
Engineering Design Technologies Corp.
P.O. Box 152403
Tampa, FL 33684-2403
813.289.8080
813.282.9184 FAX
engineering@edt1.com
Certificate of Authorization Number: 4795

CITY of TAMPA
WASTEWATER DEPARTMENT

KRAUSE PS REHABILITATION

SECTIONS & DETAILS

NO.	DATE	
1	1/27/15	CONFORMED

RED LINES

NO CHANGES

DRAWN: RC, KC
DESIGN: RR
QC: RR
DATE: 06/03/14

SHEET S-17

B080-042

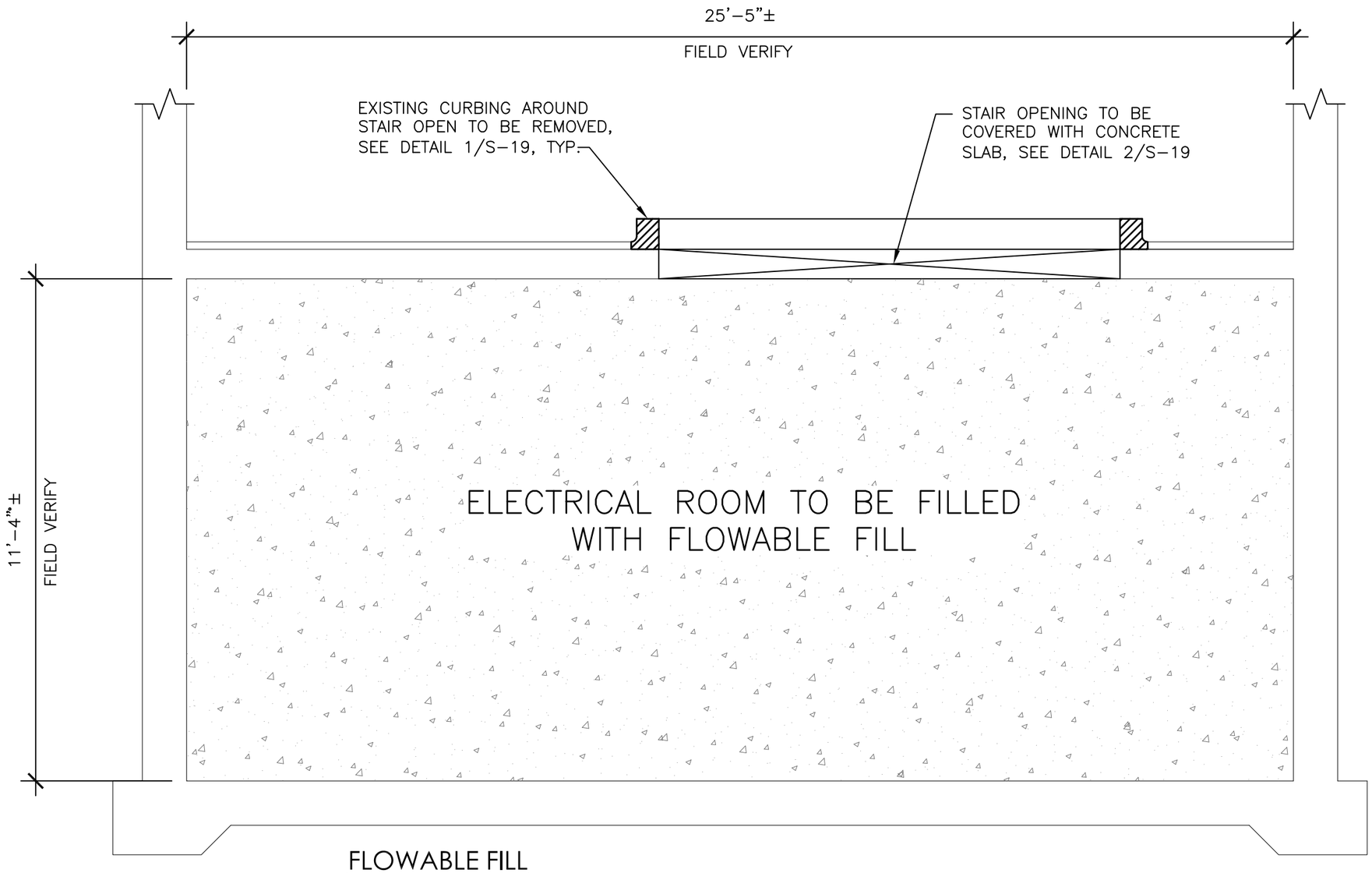

FLOWABLE FILL

1. THE 28-DAY COMPRESSIVE STRENGTH OF THE FLOWABLE FILL SHALL BE 50 TO 100 PSI.
2. THE FLOWABLE FILL IS A CONTROLLED LOW-STRENGTH MATERIAL (CLSM) AND SHALL MEET THE REQUIREMENTS OF ACI 229R (LATEST EDITION).

1 / S-18 ELECTRICAL ROOM SECTION

SCALE: 3/8" = 1'-0"

billerreinhart ENGINEERING GROUP INC.
3434 colwell avenue suite 100, tampa, florida 33614
telephone : 813.908.7203 fax : 813.931.5200
email : info@billerreinhart.com
State of Florida Certificate of Authorization No. 9149

TO THE BEST OF THE ENGINEER'S KNOWLEDGE, THE PLANS AND SPECIFICATIONS COMPLY WITH THE APPLICABLE MINIMUM BUILDING CODES

ROBERT J. REINHART
FL. P.E. NO. 50076

EDT Engineering Design Technologies Corp.
P.O. Box 152403
Tampa, FL 33684-2403
813.289.8080
813.282.9184 FAX
engineering@edt1.com
Certificate of Authorization Number: 4795

CITY of TAMPA
WASTEWATER DEPARTMENT

KRAUSE PS REHABILITATION

SECTIONS & DETAILS

NO.	DATE
1	1/27/15

RED LINES

NO CHANGES

DRAWN: RC, KC
DESIGN: RR
RC: RR
DATE: 06/03/14

SHEET S-18

B080-043

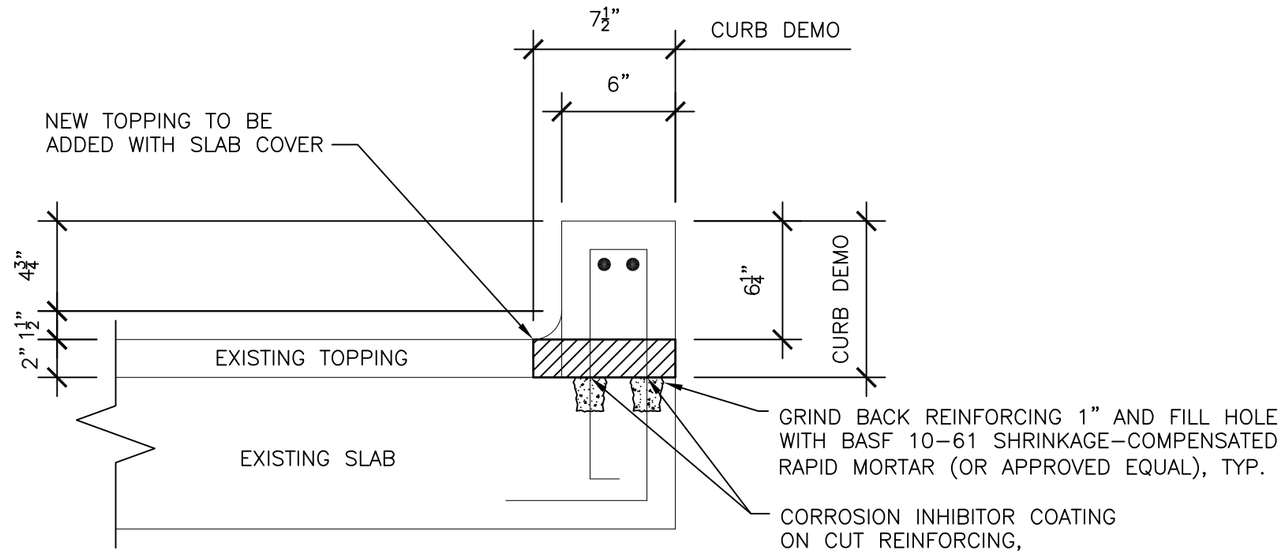

1 / S-19 CURBING DEMOLITION & REPAIR DETAIL

SCALE: 1 1/2" = 1'-0"

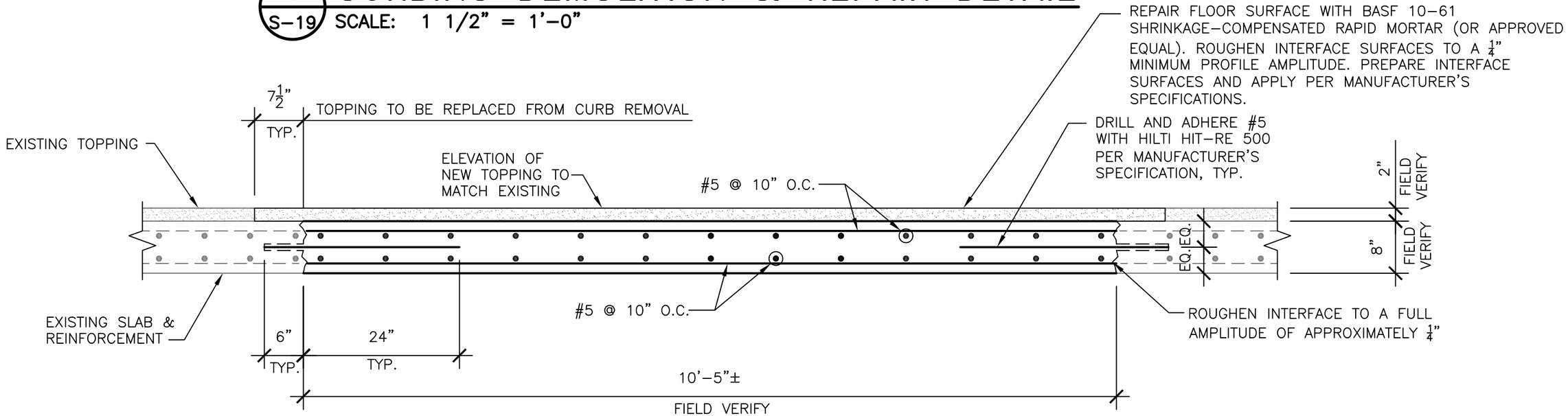

2 / S-19 SLAB COVER OVER STAIR OPENING DETAIL

SCALE: 3/4" = 1'-0"

billerreinhart ENGINEERING GROUP INC.
3434 colwell avenue suite 100, tampa, florida 33614
telephone : 813.908.7203 fax : 813.931.5200
email : info@billerreinhart.com
State of Florida Certificate of Authorization No. 9149

TO THE BEST OF THE ENGINEER'S KNOWLEDGE, THE PLANS AND SPECIFICATIONS COMPLY WITH THE APPLICABLE MINIMUM BUILDING CODES

ROBERT J. REINHART
FL. P.E. NO. 50076

EDT
Engineering Design Technologies Corp.
P.O. Box 152403
Tampa, FL 33684-2403
813.289.8080
813.282.9184 FAX
engineering@edt1.com
Certificate of Authorization Number: 4795

CITY of TAMPA
WASTEWATER DEPARTMENT

KRAUSE PS REHABILITATION

SECTIONS & DETAILS

NO.	DATE	CONFORMED
1	1/27/15	

RED LINES

NO CHANGES

DRAWN: RC, KC
DESIGN: RR
CHK: RR
DATE: 06/03/14

SHEET S-19

B080-044

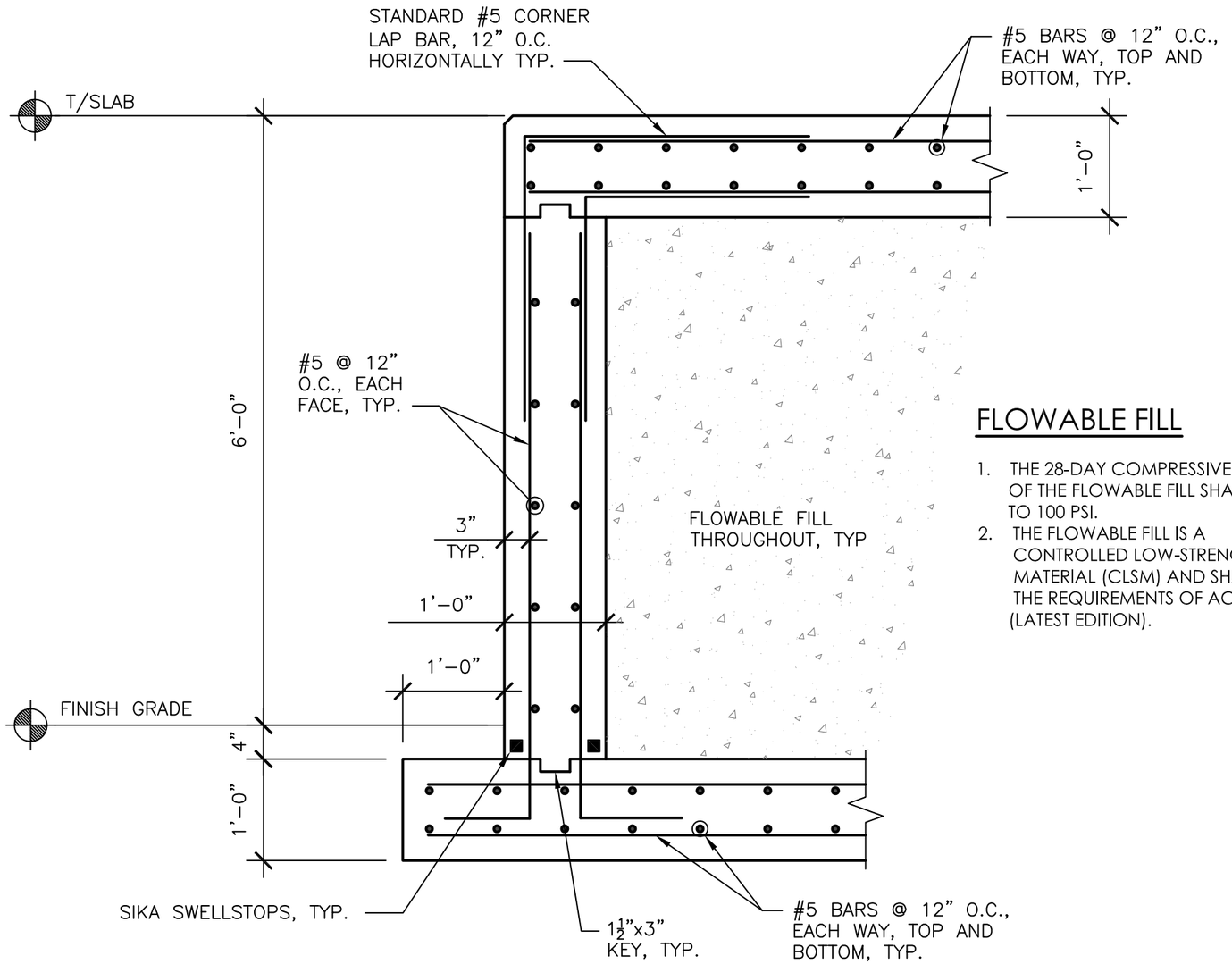

FLOWABLE FILL

1. THE 28-DAY COMPRESSIVE STRENGTH OF THE FLOWABLE FILL SHALL BE 50 TO 100 PSI.
2. THE FLOWABLE FILL IS A CONTROLLED LOW-STRENGTH MATERIAL (CLSM) AND SHALL MEET THE REQUIREMENTS OF ACI 229R (LATEST EDITION).

1 / S-20 SECTION

SCALE: 3/4" = 1'-0"

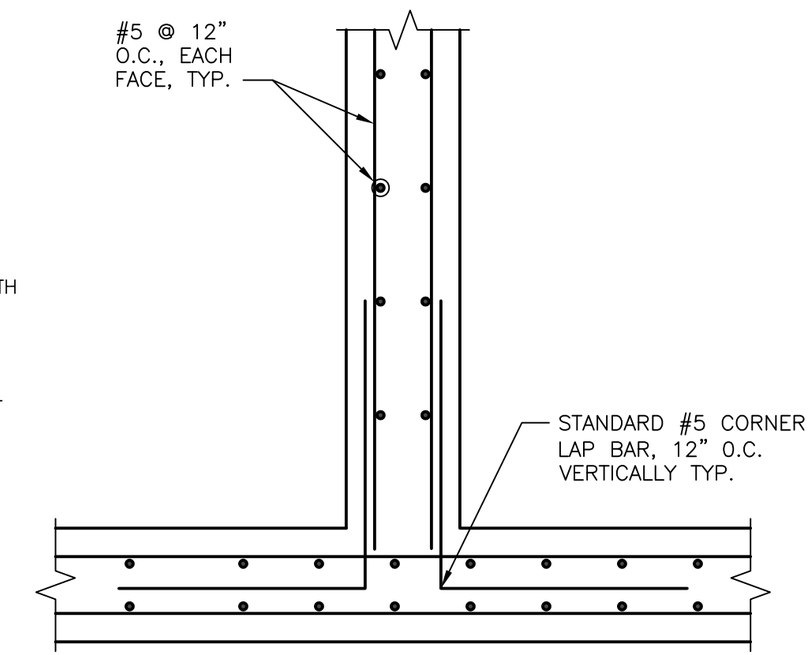

2 / S-20 WALL INTERSECTION DETAIL

SCALE: 3/4" = 1'-0"

billerreinhart ENGINEERING GROUP INC.
3434 colwell avenue suite 100, tampa, florida 33614
telephone : 813.908.7203 fax : 813.931.5200
email : info@billerreinhart.com
State of Florida Certificate of Authorization No. 9149

TO THE BEST OF THE ENGINEER'S KNOWLEDGE, THE PLANS AND SPECIFICATIONS COMPLY WITH THE APPLICABLE MINIMUM BUILDING CODES

ROBERT J. REINHART
FL. P.E. NO. 50076

EDT
Engineering Design Technologies Corp.
P.O. Box 152403
Tampa, FL 33684-2403
813.289.8080
813.282.9184 FAX
engineering@edt1.com
Certificate of Authorization Number: 4795

CITY of TAMPA
WASTEWATER DEPARTMENT

KRAUSE PS REHABILITATION

SECTIONS & DETAILS

NO.	DATE	CONFORMED
1	1/27/15	

RED LINES

NO CHANGES

DRAWN: RC, KC
DESIGN: RR
QC: RR
DATE: 06/03/14

SHEET S-20

B080-045

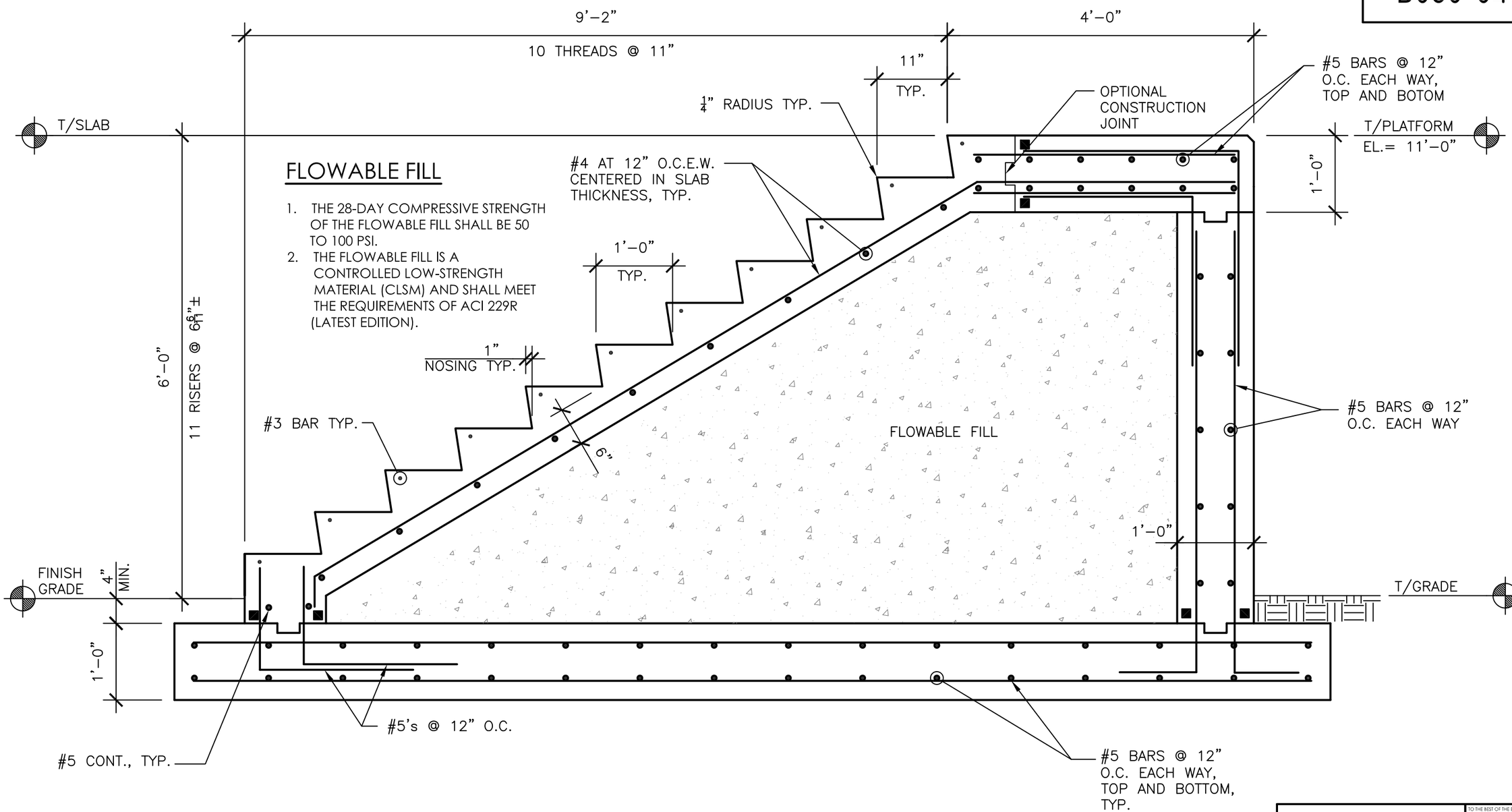

FLOWABLE FILL

1. THE 28-DAY COMPRESSIVE STRENGTH OF THE FLOWABLE FILL SHALL BE 50 TO 100 PSI.
2. THE FLOWABLE FILL IS A CONTROLLED LOW-STRENGTH MATERIAL (CLSM) AND SHALL MEET THE REQUIREMENTS OF ACI 229R (LATEST EDITION).

1 / S-21 STAIR SECTION

SCALE: 3/4" = 1'-0"

billerreinhart ENGINEERING GROUP INC.
3434 colwell avenue suite 100, tampa, florida 33614
telephone : 813.908.7203 fax : 813.931.5200
email : info@billerreinhart.com
State of Florida Certificate of Authorization No. 9149

TO THE BEST OF THE ENGINEER'S KNOWLEDGE, THE PLANS AND SPECIFICATIONS COMPLY WITH THE APPLICABLE MINIMUM BUILDING CODES

ROBERT J. REINHART
FL. P.E. NO. 50076

EDT
Engineering Design Technologies Corp.
P.O. Box 152403
Tampa, FL 33684-2403
813.289.8080
813.282.9184 FAX
engineering@edt1.com
Certificate of Authorization Number: 4795

CITY of TAMPA
WASTEWATER DEPARTMENT

KRAUSE PS REHABILITATION

SECTIONS & DETAILS

NO.	DATE	
1	1/27/15	CONFORMED

RED LINES

NO CHANGES

DRAWN: RC, KC
DESIGN: RR
QC: RR
DATE: 06/03/14

SHEET S-21

B080-046

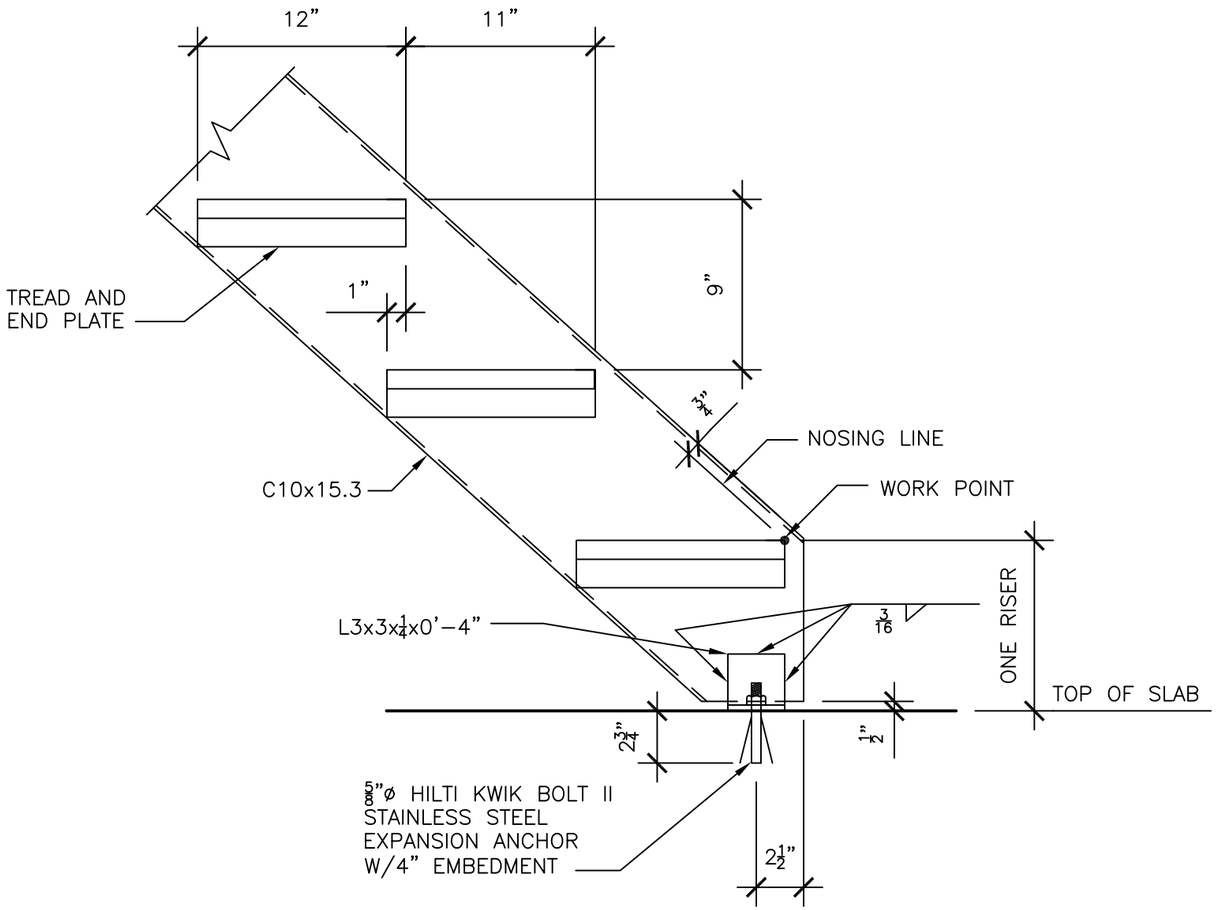

STAIR DETAIL

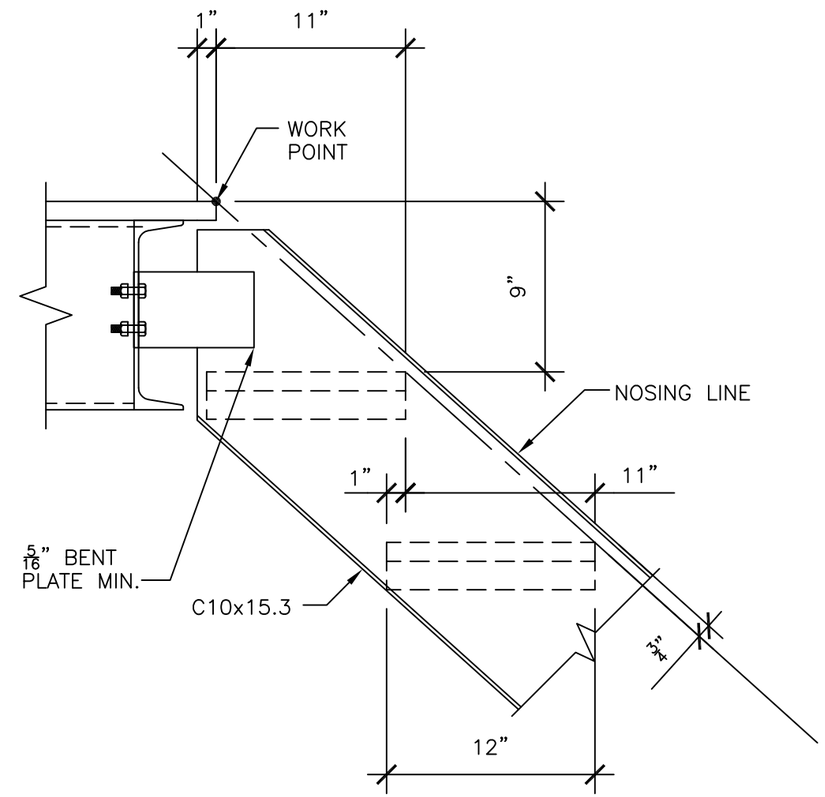

STAIR DETAIL

1 / S-22 TYPICAL STAIR SECTIONS AND DETAILS

SCALE: NTS

billerreinhart ENGINEERING GROUP INC.
3434 colwell avenue suite 100, tampa, florida 33614
telephone : 813.908.7203 fax : 813.931.5200
email : info@billerreinhart.com
State of Florida Certificate of Authorization No. 9149

TO THE BEST OF THE ENGINEER'S KNOWLEDGE, THE PLANS AND SPECIFICATIONS COMPLY WITH THE APPLICABLE MINIMUM BUILDING CODES

ROBERT J. REINHART
FL. P.E. NO. 50076

EDT Engineering Design Technologies Corp.
P.O. Box 152403
Tampa, FL 33684-2403
813.289.8080
813.282.9184 FAX
engineering@edt1.com
Certificate of Authorization Number: 4795

CITY of TAMPA
WASTEWATER DEPARTMENT

KRAUSE PS REHABILITATION

SECTIONS & DETAILS

NO.	DATE
1	1/27/15

RED LINES

NO CHANGES

DRAWN: RC, KC
DESIGN: RR
QC: RR
DATE: 06/03/14

SHEET S-22

B080-047

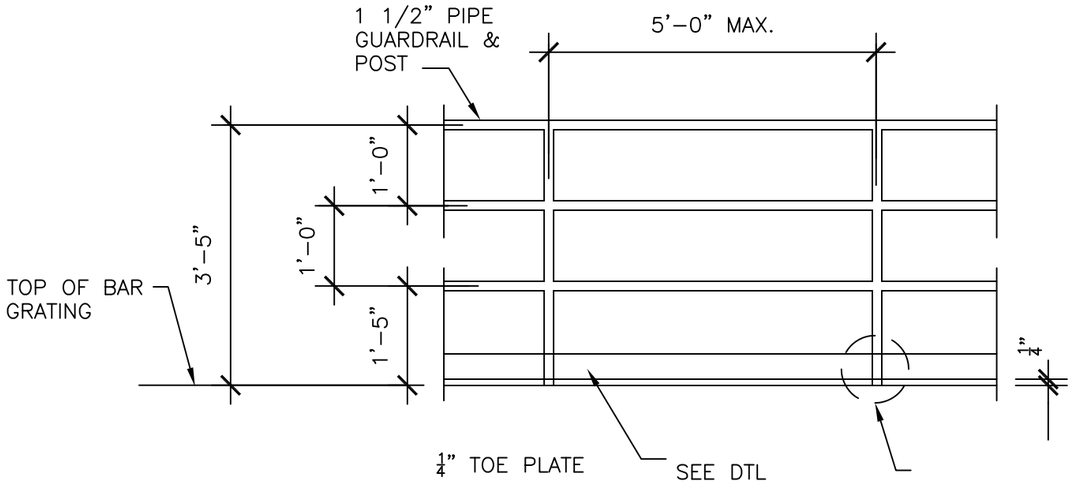

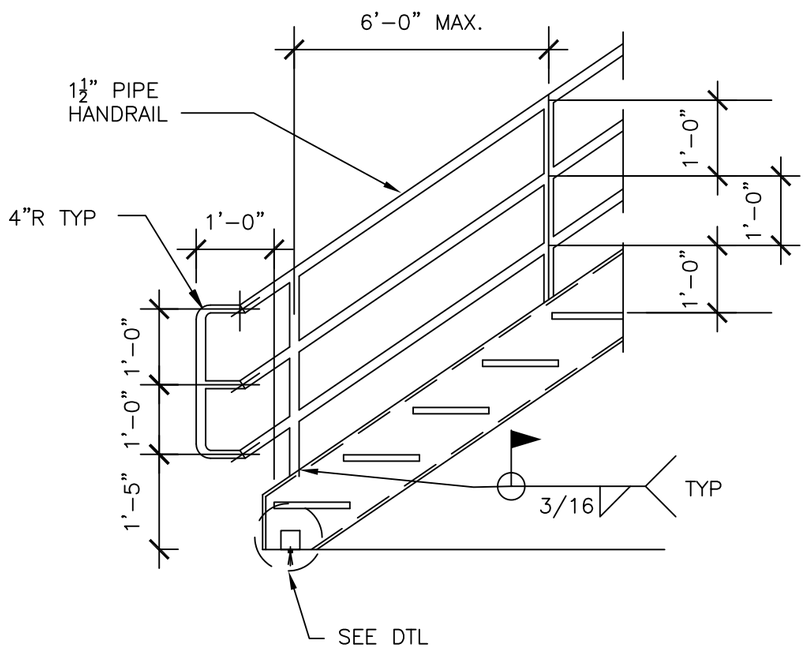

TYPICAL HANDRAIL

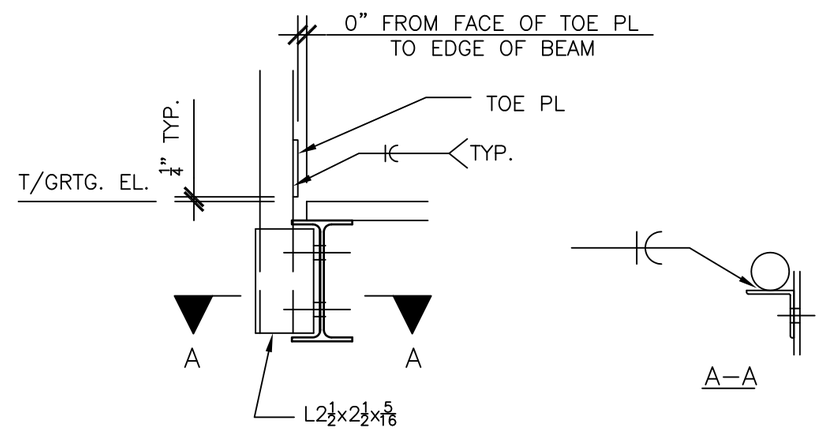

POST CONNECTION DETAIL

STRUCTURAL ALUMINUM FOR GUARD RAIL AND HANDRAIL ASSEMBLIES

1. ALL ANGLES ASTM B308/B308M – 02, "STANDARD SPECIFICATION FOR ALUMINUM–ALLOY 6061–T6 STANDARD STRUCTURAL PROFILES", WITH MINIUM YIELD STRENGTH Fy = 35 KSI.
2. ALL STRUCTURAL PIPE AND TUBE (NOT INTENDED FOR FLUID–CARRYING APPLICATIONS) SHALL CONFORM TO ASTM B429/B429M –06, "STANDARD SPECIFICATION FOR ALUMINUM–ALLOY EXTRUDED STRUCTURAL PIPE AND TUBE", WITH MINIMUM YIELD STRENGTH Fy = 35 KSI.
3. ALL PLATES SHALL CONFORM TO ASTM B209 – 07, "STANDARD SPECIFICATION FOR ALUMINUM AND ALUMINUM–ALLOY SHEET AND PLATE", WITH MINIMUM YIELD STRENGTH Fy = 35 KSI.
4. TOE PLATES SHALL BE 4" x 1/4 ".
5. HANDRAIL SHALL BE SHOP ASSEMBLED WITH TOE PLATE IN COMPLETE PANELS REQUIRING NO FIELD SPLICES.
6. EACH HANDRAIL PANEL SHALL HAVE A MINIMUM OF TWO POSTS.
7. MINIMUM WELD SHALL BE 3/16" FILLET.
8. ALL WELDED JOINTS SHALL BE COMPLETELY SEALED.
9. ALL JOINTS AND WELDS IN TOP RAIL SHALL BE GROUND SMOOTH.
10. BOLTED CONNECTIONS SHALL BE MADE WITH 3/4 " DIA. ASTM F 593 STAINLESS STEEL ALLOY 316 BOLTS.
11. ALL CORNERS SHALL BE MITER CUT OR MINIMUM RADIUS BEND.
12. OPEN END OF ALL POSTS SHALL BE PLUGGED AND WELDED.
13. WELDING PROCESSES FOR ALUMINUM SHALL BE GAS METAL ARC WELDING (GMAW), COMMONLY CALLED MIG, OR GAS TUNGSTEN ARC WELDING (GTAW), REFERED TO AS TIG.
14. ALL WELDS SHALL BE MADE BY QUALIFIED WELDERS AS PER AWS D1.2 "STRUCTURAL WELDING CODE – ALUMINUM" REQUIREMENTS. MIG AND TIG FILLER ALLOYS SHALL BE PER AWS A5.10/A5.10M "SPECIFICATION FOR BARE ALUMINUM AND ALUMINUM–ALLOY WELDING ELECTRODES AND RODS." ALUMINUM ALLOY FILLER MATERIALS SHALL BE PER TABLE 7.2–1 OF THE ALUMINUM DESIGN MANUAL 2005. ALLOY FILLER PREFERRED IS 5356; HOWEVER, ALLOYS 4043, 4047, 5183, OR 5556 MAY BE USED.
15. RETURN ALL WELDS AT CORNERS TWICE THE NOMINAL WELD SIZE MINIMUM.
16. WELDS NOT OTHERWISE DESIGNATED SHALL BE 1/4 IN. MINIMUM FILLET WELDS.
17. ALUMINUM FINISHES
    A. FINISH DESIGNATIONS PREFIXED BY AA COMPLY WITH THE SYSTEM ESTABLISHED BY THE ALUMINUM ASSOCIATION FOR DESIGNATING ALUMINUM FINISHES.
    B. AS–FABRICATED: AA–M10 (MECHANICAL FINISH: AS FABRICATED, UNSPECIFIED).
    C. CLASS I, CLEAR ANODIC FINISH; AA–M12C22A41 (MECANICAL FINISH: NONSPECULAR AS FABRICATED; CHEMICAL FINISH: ETCHED, MEDIUM MATTE; ANODIC COATING: ARCHITECTURAL CLASS I, CLEAR COATING 0.018 MM OR THICKER) COMPLYING WITH AAMA 607.1.
18. SHOP DRAWINGS: SUBMIT SHOP DRAWINGS PREPARED UNDER SUPERVISION OF A REGISTERED PROFESSIONAL ENGINEER, INCLUDING COMPLETE DETAILS AND SCHEDULES FOR FABRICATION AND ASSEMBLY OF STRUCTURAL ALUMINUM MEMBERS, PROCEDURES AND DIAGRAMS. INCLUDE DETAILS OF CUTS, CONNECTIONS, CAMBER, HOLES AND OTHER PERTINENT DATA. INDICATE WELDS BY STANDARD AWS SYMBOLS AND SHOW SIZE, LENGTH AND TYPE OF EACH WELD. STRUCTURAL ALUMINUM SHOP DRAWINGS SHALL BE SIGNED AND SEALED BY THE PROFESSIONAL ENGINEER WHO SUPERVISED THEIR PRODUCTION.

1 / S-23 TYPICAL STAIR SECTIONS AND DETAILS

SCALE: NTS

billerreinhart ENGINEERING GROUP INC.
3434 colwell avenue suite 100, tampa, florida 33614
telephone : 813.908.7203 fax : 813.931.5200
email : info@billerreinhart.com
State of Florida Certificate of Authorization No. 9149

TO THE BEST OF THE ENGINEER'S KNOWLEDGE THE PLANS AND SPECIFICATIONS COMPLY WITH THE APPLICABLE MINIMUM BUILDING CODES

ROBERT J. REINHART
FL. P.E. NO. 50076

EDT Engineering Design Technologies Corp.
P.O. Box 152403
Tampa, FL 33684-2403
813.289.8080
813.282.9184 FAX
engineering@edt1.com
Certificate of Authorization Number: 4795

CITY of TAMPA
WASTEWATER DEPARTMENT

KRAUSE PS REHABILITATION

SECTIONS & DETAILS

NO.	DATE	
1	1/27/15	CONFORMED

RED LINES

NO CHANGES

DRAWN: RC, KC
DESIGN: RR
QC: RR
DATE: 06/03/14

SHEET S-23

B080-048

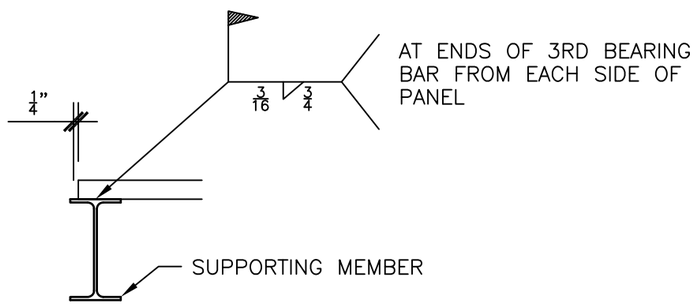

PERIMETER SUPPORTS DETAIL

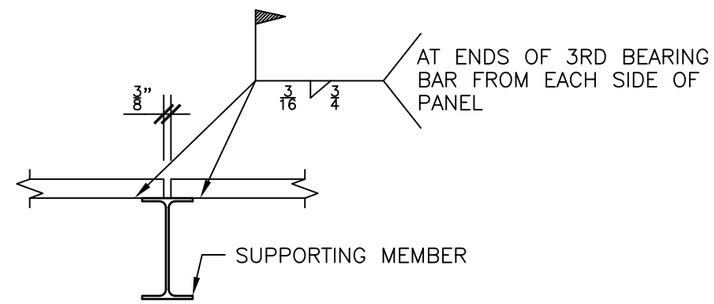

SPLICE AT SUPPORT DETAIL

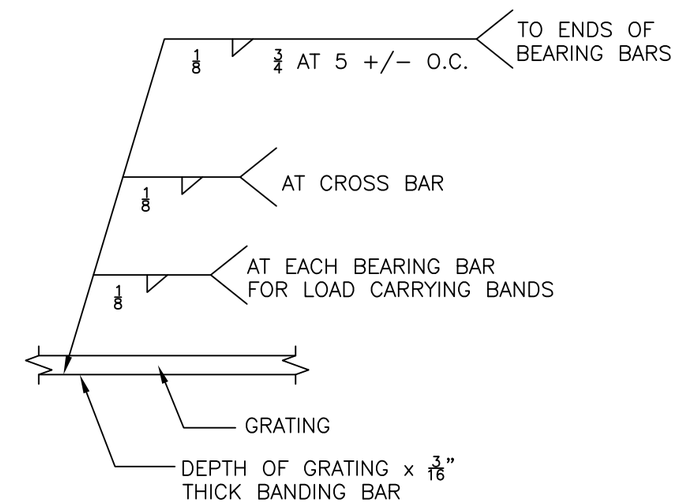

BANDING BAR DETAIL

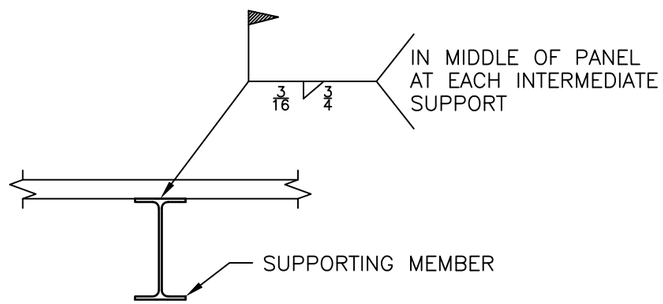

INTERMEDIATE SUPPORT DETAIL

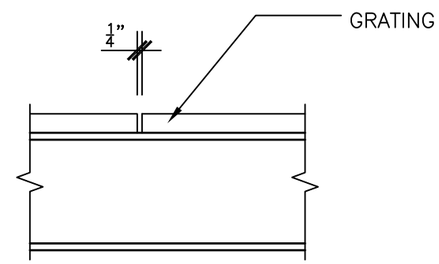

PANEL SIDES DETAIL

TYPICAL GRATING DETAILS

1 / S-24 TYPICAL STAIR SECTIONS AND DETAILS

SCALE: NTS

billerreinhart ENGINEERING GROUP INC.
3434 colwell avenue suite 100, tampa, florida 33614
telephone : 813.908.7203 fax : 813.931.5200
email : info@billerreinhart.com
State of Florida Certificate of Authorization No. 9149

TO THE BEST OF THE ENGINEER'S KNOWLEDGE, THE PLANS AND SPECIFICATIONS COMPLY WITH THE APPLICABLE MINIMUM BUILDING CODES

ROBERT J. REINHART
FL. P.E. NO. 50076

EDT Engineering Design Technologies Corp.
P.O. Box 152403
Tampa, FL 33684-2403
813.289.8080
813.282.9184 FAX
engineering@edt1.com
Certificate of Authorization Number: 4795

CITY of TAMPA
WASTEWATER DEPARTMENT

KRAUSE PS REHABILITATION

SECTIONS & DETAILS

NO.	DATE	
1	1/27/15	CONFORMED

RED LINES

NO CHANGES

DRAWN: RC, KC
DESIGN: RR
QC: RR
DATE: 06/03/14

SHEET S-24

B080-049

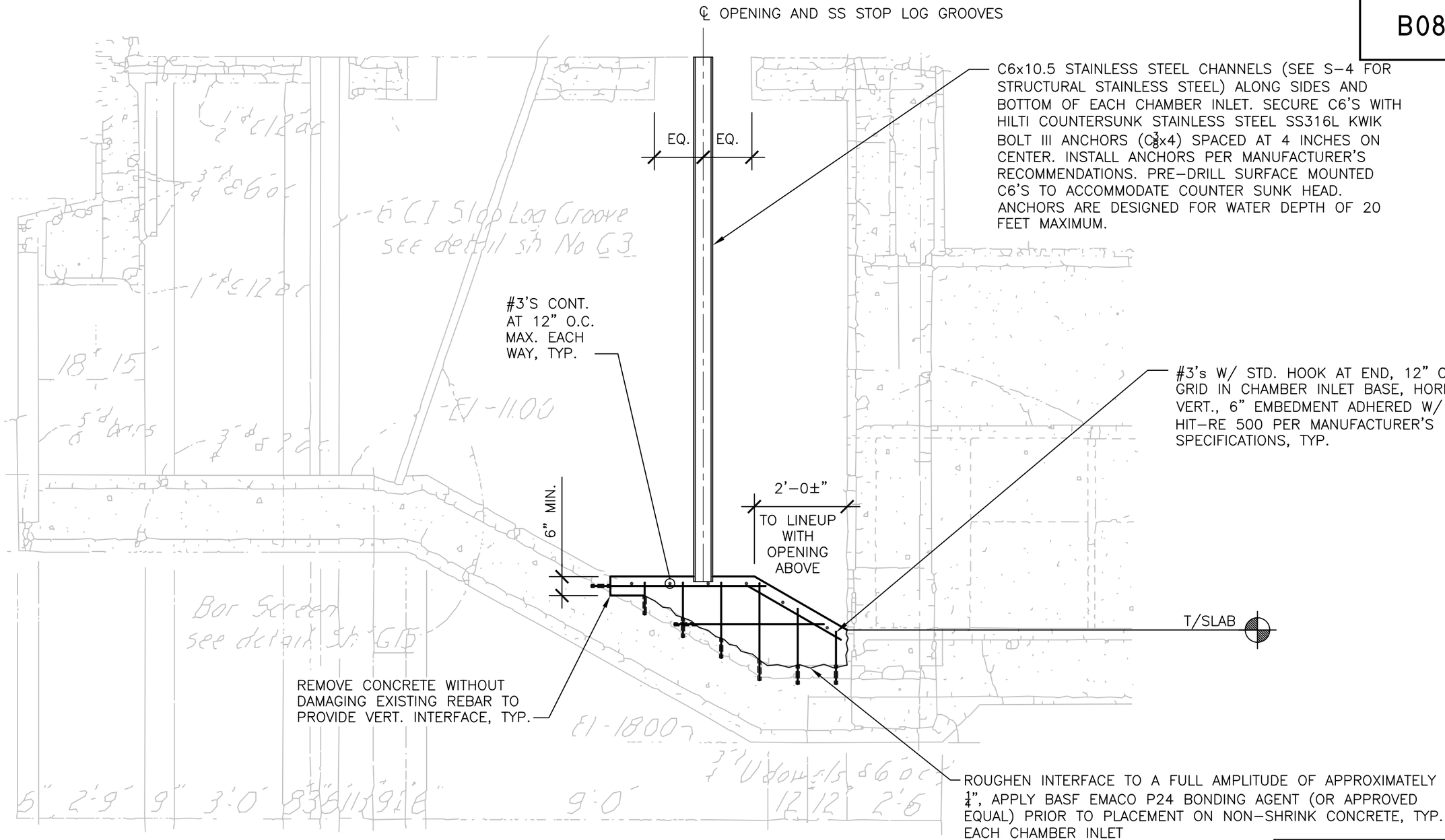

1 / S-25 CHAMBER INLET SECTION

SCALE: 3/8" = 1'-0" (NOTE EXISTING SECTION UNDERLAY IS APPROXIMATE AND FOR LOCATION PURPOSES ONLY)

billerreinhart ENGINEERING GROUP INC.
3434 colwell avenue suite 100, tampa, florida 33614
telephone : 813.908.7203 fax : 813.931.5200
email : info@billerreinhart.com
State of Florida Certificate of Authorization No. 9149

TO THE BEST OF THE ENGINEER'S KNOWLEDGE, THE PLANS AND SPECIFICATIONS COMPLY WITH THE APPLICABLE MINIMUM BUILDING CODES

ROBERT J. REINHART
FL. P.E. NO. 50076

EDT Engineering Design Technologies Corp.
P.O. Box 152403
Tampa, FL 33684-2403
813.289.8080
813.282.9184 FAX
engineering@edt1.com
Certificate of Authorization Number: 4795

CITY of TAMPA
WASTEWATER DEPARTMENT

KRAUSE PS REHABILITATION

STRUCTURAL DETAIL

NO.	DATE	
1	1/27/15	CONFORMED

RED LINES

NO CHANGES

DRAWN: RC, KC
DESIGN: RR
RR
DATE: 06/03/14

SHEET S-25

B080-050

billerreinhart
ENGINEERING GROUP INC.
3434 colwell avenue suite 100, tampa, florida 33614
telephone : 813.908.7203 fax : 813.931.5200
email : info@billerreinhart.com
State of Florida Certificate of Authorization No. 9149

TO THE BEST OF THE ENGINEER'S KNOWLEDGE, THE PLANS AND SPECIFICATIONS COMPLY WITH THE APPLICABLE MINIMUM BUILDING CODES

ROBERT J. REINHART
FL. P.E. NO. 50076

EDT
Engineering Design Technologies Corp.
P.O. Box 152403
Tampa, FL 33684-2403
813.289.8080
813.282.9184 FAX
engineering@edt1.com
Certificate of Authorization Number: 4795

CITY of TAMPA
WASTEWATER DEPARTMENT

KRAUSE PS REHABILITATION

STRUCTURAL DETAIL

NO.	DATE	
1	1/27/1	CONFORMED

RED LINES

NO CHANGES

DRAWN: RC, KC
DESIGN: RR
QC: RR
DATE: 06/03/14

SHEET S-26

B080-051

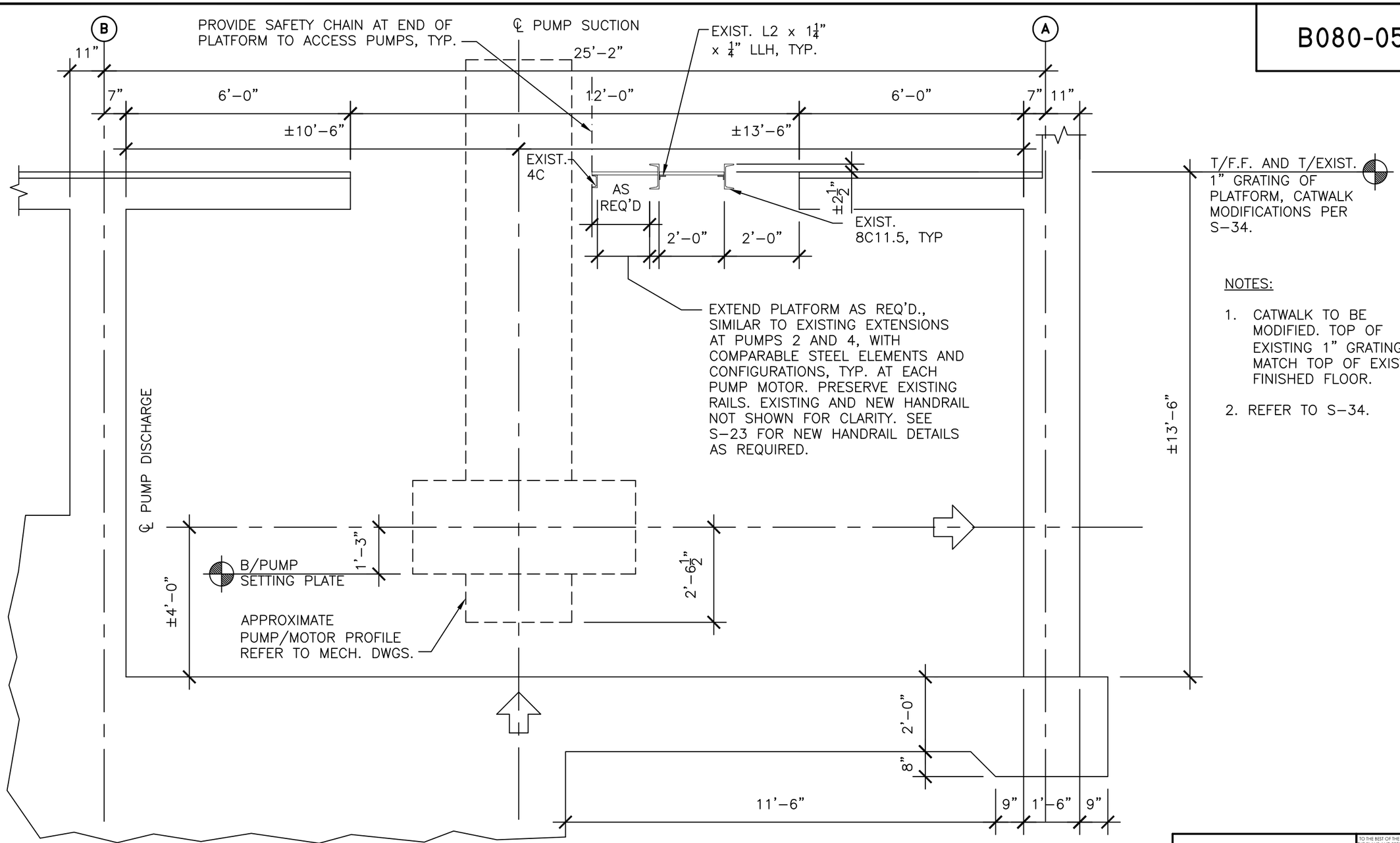

NOTES:

1. CATWALK TO BE MODIFIED. TOP OF EXISTING 1" GRATING TO MATCH TOP OF EXISTING FINISHED FLOOR.
2. REFER TO S-34.

1 / S-27 **PUMP DETAIL**

SCALE: 3/8" = 1'-0"

billerreinhart ENGINEERING GROUP INC.
3434 colwell avenue suite 100, tampa, florida 33614
telephone : 813.908.7203 fax : 813.931.5200
email : info@billerreinhart.com
State of Florida Certificate of Authorization No. 9149

TO THE BEST OF THE ENGINEER'S KNOWLEDGE, THE PLANS AND SPECIFICATIONS COMPLY WITH THE APPLICABLE MINIMUM BUILDING CODES

ROBERT J. REINHART
FL. P.E. NO. 50076

EDT Engineering Design Technologies Corp.
P.O. Box 152403
Tampa, FL 33684-2403
813.289.8080
813.282.9184 FAX
engineering@edt1.com
Certificate of Authorization Number: 4795

CITY of TAMPA
WASTEWATER DEPARTMENT

KRAUSE PS REHABILITATION

STRUCTURAL DETAIL

NO.	DATE
1	1/27/15

RED LINES

NO CHANGES

DRAWN: RC, KC
DESIGN: RR
CK: RR
DATE: 06/03/14

SHEET S-27

B080-052

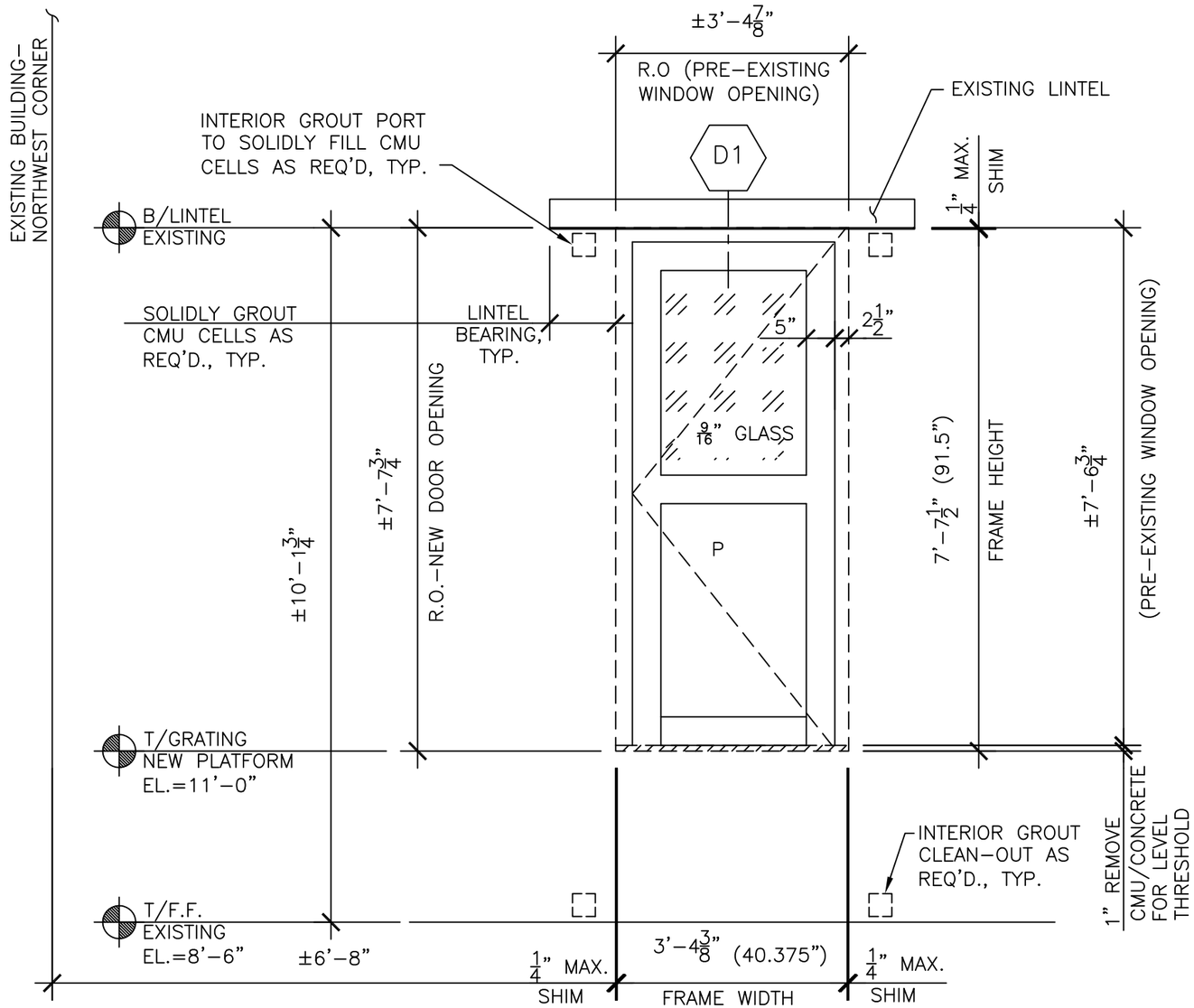

1 / S-28 PARTIAL WEST EXTERIOR ELEVATION

SCALE: 1/2" = 1'-0"

NOTE: SEE S-8 FOR INTERIOR ELEVATION

DOOR DETAILS AND FINISH HARDWARE SCHEDULE

SET #1 ELECTRICAL ROOM DOOR - ALL HARDWARE STANDARD CLEAR

2 PR (4)	IMPACT BUTT HINGES	PER DOOR AND FRAME MANUFACTURER (EFCO CORPORATION)
1 SET	STANDARD PUSH/PULL	PER DOOR AND FRAME MANUFACTURER (EFCO CORPORATION)
1	LOCKSET	3 POINT IMPACT LOCK (MK DR16) AND 1490 IMPACT PANIC BAR (MK DR 21) PER DOOR AND FRAME MANUFACTURER (EFCO CORPORATION)
1	DOOR CLOSER	LCN 4041 SURFACE MOUNT
1	THRESHOLD	8924 IMPACT WITH SEAL PER DOOR AND FRAME MANUFACTURER (EFCO CORPORATION)
1	SWEEP	9960/9961 IMPACT PER DOOR AND FRAME MANUFACTURER (EFCO CORPORATION)
1	BOTTOM RAIL	PER DOOR AND FRAME MANUFACTURER (EFCO CORPORATION)
1	CROSS RAILS	PER DOOR AND FRAME MANUFACTURER (EFCO CORPORATION)
1	BOTTOM PANEL	PER DOOR AND FRAME MANUFACTURER (EFCO CORPORATION)
1 SET	WEATHERSTRIPPING	PER DOOR AND FRAME MANUFACTURER (EFCO CORPORATION)
	OTHER	ALL ITEMS TO BE INCLUDED FOR A COMPLETE ENTRY DOOR AND FRAME SYSTEM
	FASTENERS/ANCHORS	PER FLORIDA PRODUCT APPORVAL DOCUMENTS AND DOOR AND FRAME MANUFACTURER (EFCO CORPORATION)

NOTE: LOCKSET TO BE KEYED TO EXISTING PUMP STATION DOOR LOCKS.

DOOR SCHEDULE

DOORS						FRAMES											
				ROUGH OPENING					NOMINAL SIZE			DETAILS					
MARK	UNIT	TYPE	MATERIAL	WIDTH	HEIGHT	UNIT	MATERIAL	TYPE	WIDTH	HEIGHT	DEPTH	HEAD	JAMB	FIN. HDW. SET	FLORIDA PRODUCT APPROVAL	HAND OF DOOR	NOTES
D1	EA.	G	ALUMINUM	3'-4-7/8"	7'-7-1/2"	EA.	ALUMINUM	6063-T6	3'-4-7/8"	7'-7-1/2"	5"	2-1/2"	2-1/2"	1	FL# 16398	LHR	EFCO SERIES D500 WIDE STILE DOOR WITH SS25 FABRICATED FRAME; GLASS - 9/16" LAMINATED GLASS (1/4" GREY HEAT STRENGTHENED x 0.090 CLR SAFLEX INTERLAYER x 1/4" CLR HEAT STRENGTHENED); LARGE MISSILE IMPACT LEVEL D; MATERIAL FINISH ULTRAPON™ COAT 70% PVDF COLOR TO MATCH EXISTING DOORS; WARRANTY 5 YEAR MATERIAL & 5 YEAR FINISH

G HALF GLASS TOP, PANEL BOTTOM

LH LEFT HAND
RH RIGHT HAND
LHR LEFT HAND REVERSE
RHR RIGHT HAND REVERSE

billerreinhart ENGINEERING GROUP INC.
3434 colwell avenue suite 100, tampa, florida 33614
telephone : 813.908.7203 fax : 813.931.5200
email : info@billerreinhart.com
State of Florida Certificate of Authorization No. 9149

TO THE BEST OF THE ENGINEER'S KNOWLEDGE, THE PLANS AND SPECIFICATIONS COMPLY WITH THE APPLICABLE MINIMUM BUILDING CODES

ROBERT J. REINHART
FL. P.E. NO. 50076

EDT Engineering Design Technologies Corp.
P.O. Box 152403
Tampa, FL 33684-2403
813.289.8080
813.282.9184 FAX
engineering@edt1.com
Certificate of Authorization Number: 4795

CITY of TAMPA
WASTEWATER DEPARTMENT

KRAUSE PS REHABILITATION

ELEVATION

NO.	DATE	CONFORMED
1	1/27/15	

RED LINES

NO CHANGES

DRAWN: RC, KC
DESIGN: RR
QC: RR
DATE: 06/03/14

SHEET S-28

B080-053

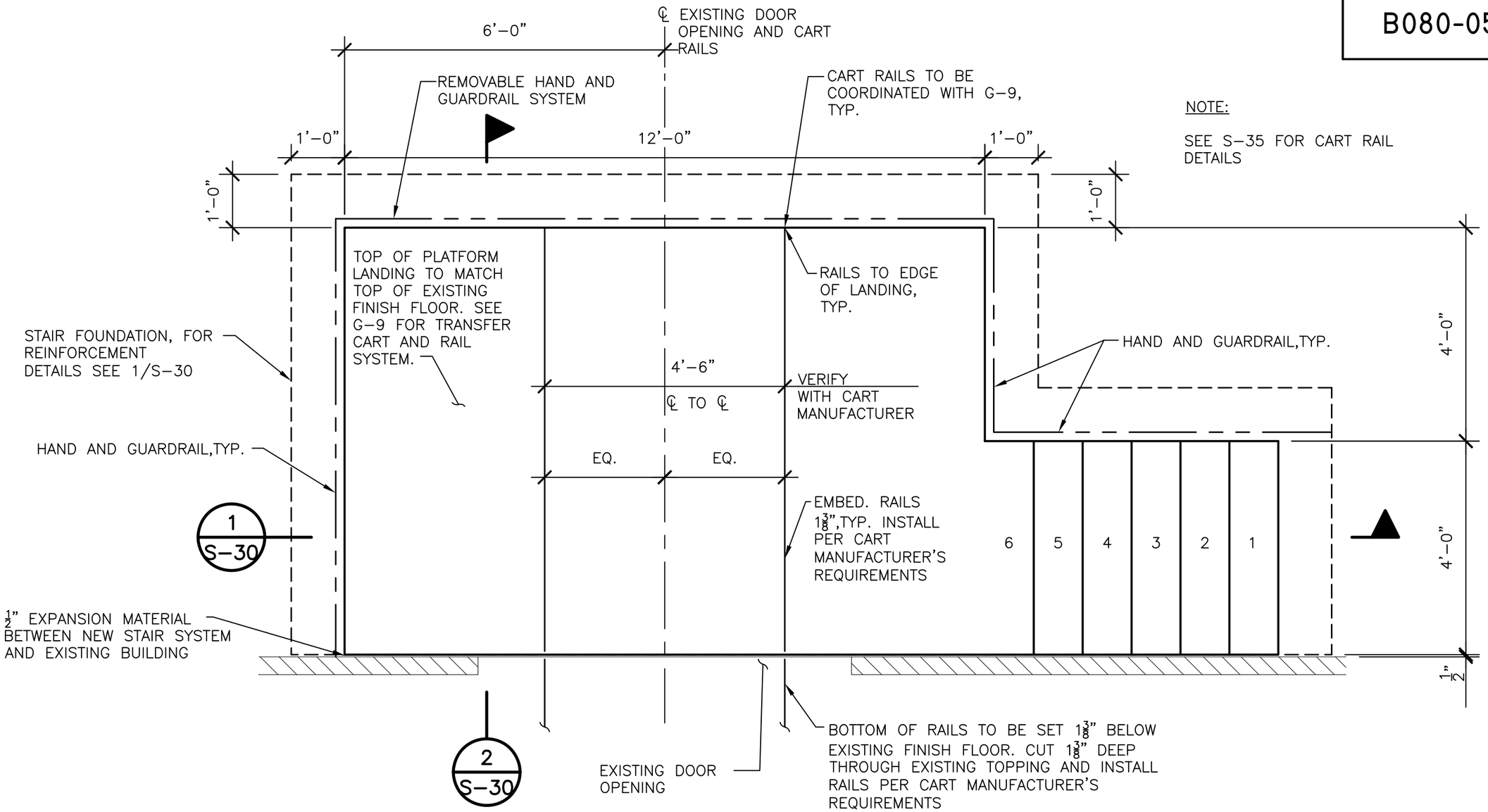

NOTE:

SEE S-35 FOR CART RAIL DETAILS

1/S-29 LIFTED ACCESS STAIR & PLATFORM PLAN

SCALE: 1/2" = 1'-0"

N

billerreinhart ENGINEERING GROUP INC.
3434 colwell avenue suite 100, tampa, florida 33614
telephone : 813.908.7203 fax : 813.931.5200
email : info@billerreinhart.com
State of Florida Certificate of Authorization No. 9149

TO THE BEST OF THE ENGINEER'S KNOWLEDGE, THE PLANS AND SPECIFICATIONS COMPLY WITH THE APPLICABLE MINIMUM BUILDING CODES

ROBERT J. REINHART
FL. P.E. NO. 50076

EDT Engineering Design Technologies Corp.
P.O. Box 152403
Tampa, FL 33684-2403
813.289.8080
813.282.9184 FAX
engineering@edt1.com
Certificate of Authorization Number: 4795

CITY of TAMPA
WASTEWATER DEPARTMENT

KRAUSE PS REHABILITATION

PLAN

NO.	DATE	
1	1/27/15	CONFORMED

RED LINES

NO CHANGES

DRAWN: RC, KC
DESIGN: RR
QC: RR
DATE: 06/03/14

SHEET S-29

B080-054

NOTES:

SEE S-35 FOR CART RAIL DETAILS.

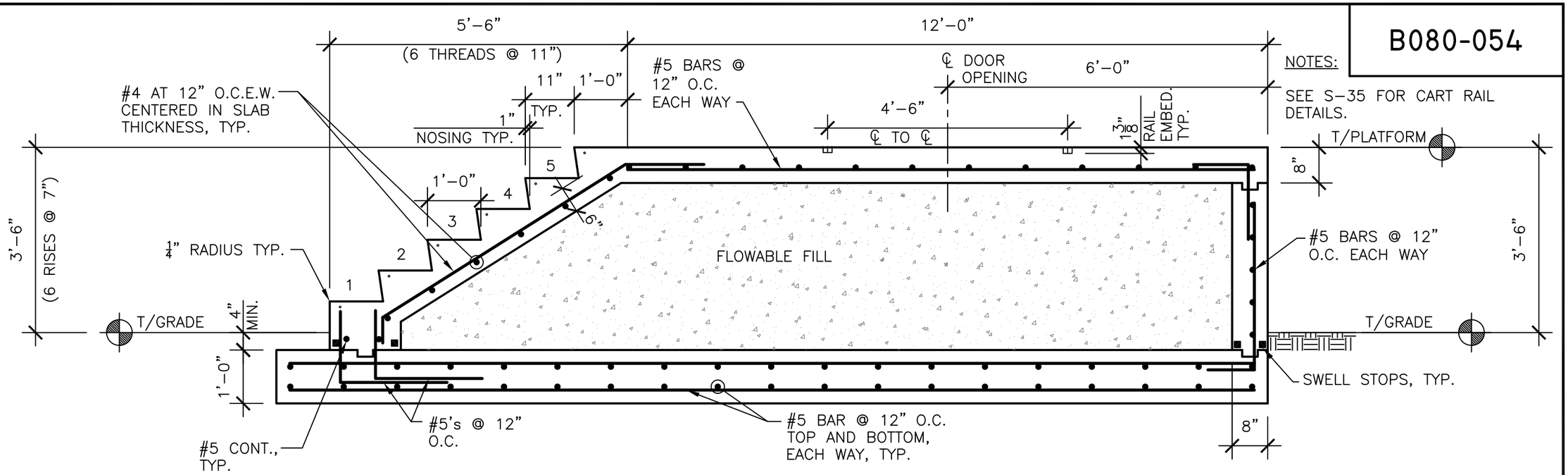

1 S-30 LIFTED ACCESS STAIR & PLATFORM SECTION

SCALE: 1/2" = 1'-0"

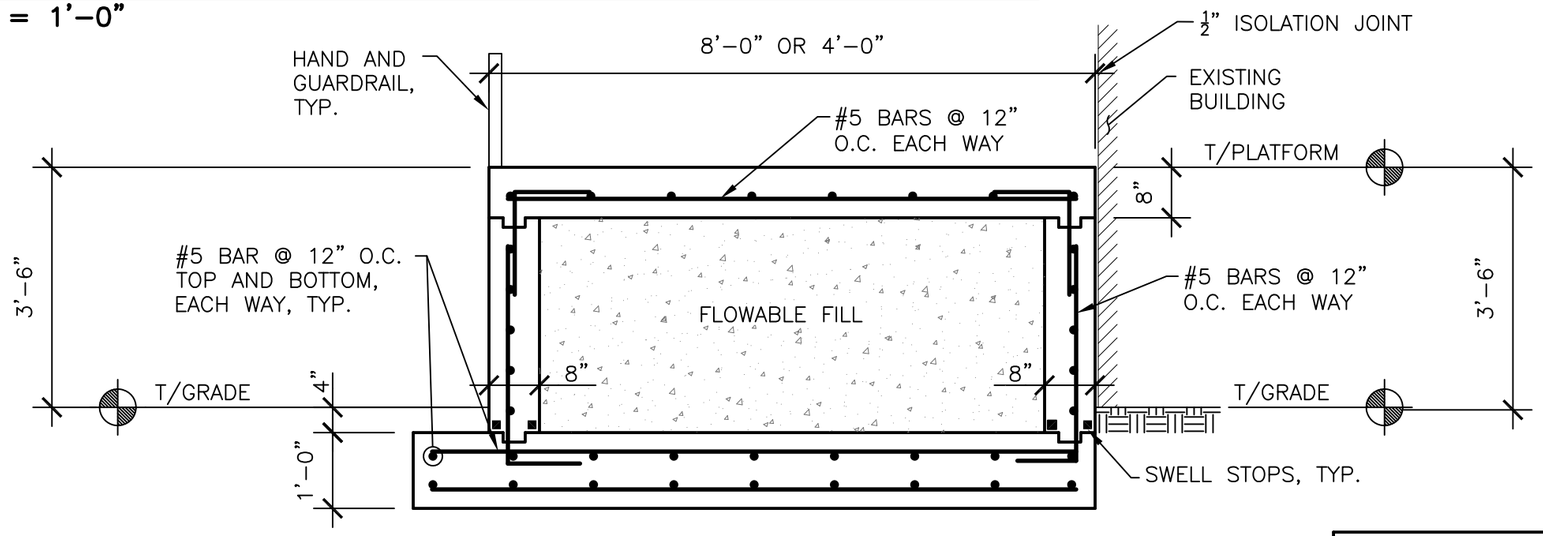

2 S-30 TYPICAL STAIR SECTION

SCALE: 1/2" = 1'-0"

billerreinhart ENGINEERING GROUP INC.
3434 colwell avenue suite 100, tampa, florida 33614
telephone : 813.908.7203 fax : 813.931.5200
email : info@billerreinhart.com
State of Florida Certificate of Authorization No. 9149

TO THE BEST OF THE ENGINEER'S KNOWLEDGE, THE PLANS AND SPECIFICATIONS COMPLY WITH THE APPLICABLE MINIMUM BUILDING CODES

ROBERT J. REINHART
FL. P.E. NO. 50076

EDT
Engineering Design Technologies Corp.
P.O. Box 152403
Tampa, FL 33684-2403
813.289.8080
813.282.9184 FAX
engineering@edt1.com
Certificate of Authorization Number: 4795

CITY of TAMPA
WASTEWATER DEPARTMENT

KRAUSE PS REHABILITATION

SECTION

NO.	DATE	
1	1/27/15	CONFORMED

RED LINES

NO CHANGES

DRAWN: RC, KC
DESIGN: RR
QC: RR
DATE: 06/03/14

SHEET S-30

B080-055

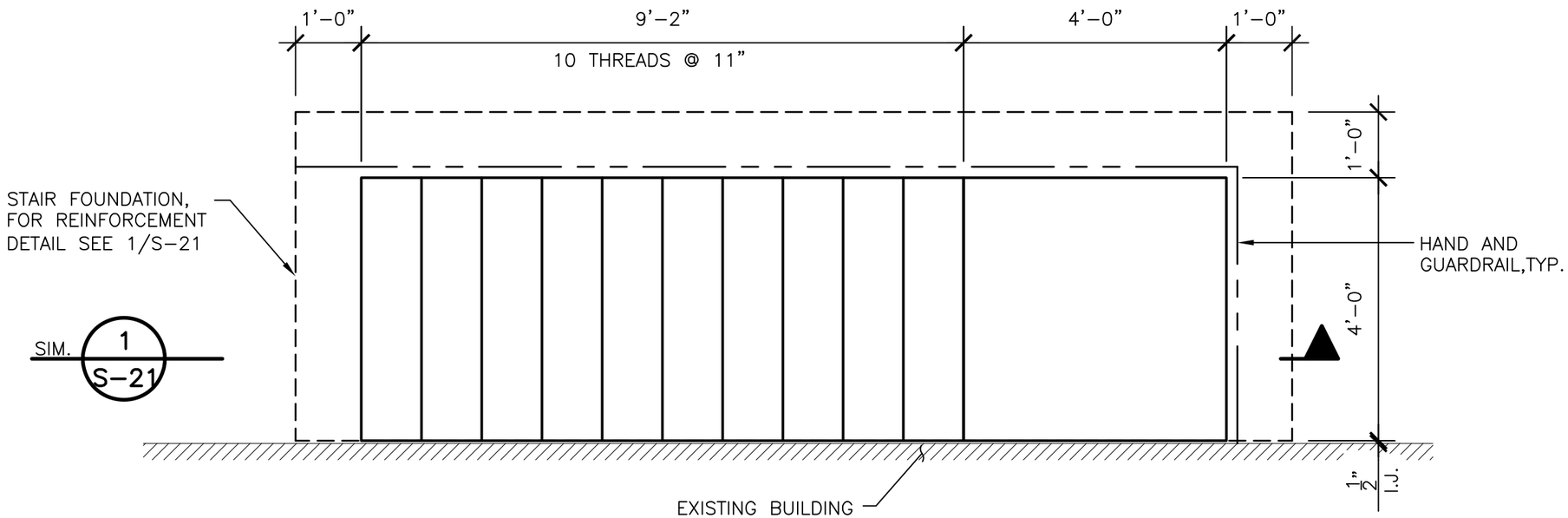

1 S-31 EXTERIOR STAIR PLAN

SCALE: 1/2" = 1'-0"

billerreinhart ENGINEERING GROUP INC.
3434 colwell avenue suite 100, tampa, florida 33614
telephone : 813.908.7203 fax : 813.931.5200
email : info@billerreinhart.com
State of Florida Certificate of Authorization No. 9149

TO THE BEST OF THE ENGINEER'S KNOWLEDGE, THE PLANS AND SPECIFICATIONS COMPLY WITH THE APPLICABLE MINIMUM BUILDING CODES

ROBERT J. REINHART
FL. P.E. NO. 50076

EDT Engineering Design Technologies Corp.
P.O. Box 152403
Tampa, FL 33684-2403
813.289.8080
813.282.9184 FAX
engineering@edt1.com

Certificate of Authorization Number: 4795

CITY of TAMPA
WASTEWATER DEPARTMENT

KRAUSE PS REHABILITATION

PLAN

NO.	DAT	CONFORMED
1	1/27/15	

RED LINES

NO CHANGES

DRAWN: RC, KC
DESIGN: RR
QC: RR
DATE: 06/03/14

SHEET S-31

B080-056

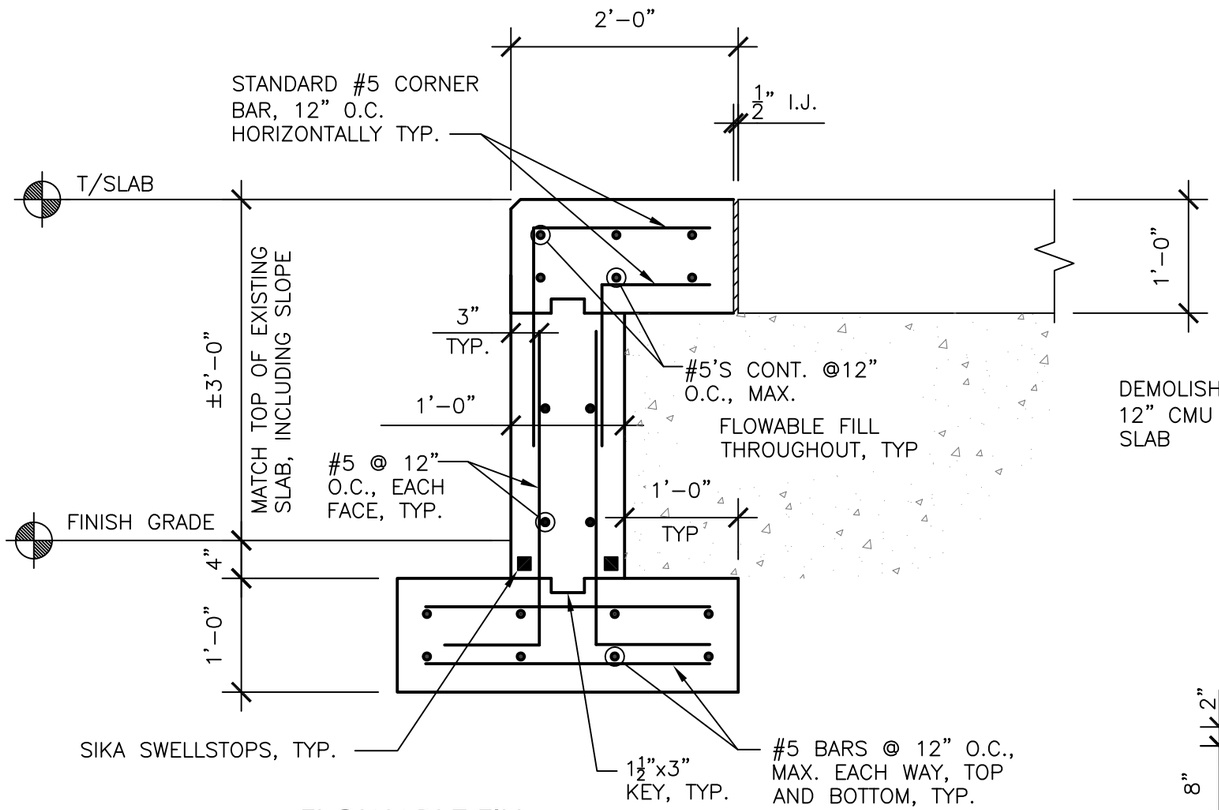

FLOWABLE FILL

1. THE 28-DAY COMPRESSIVE STRENGTH OF THE FLOWABLE FILL SHALL BE 50 TO 100 PSI.
2. THE FLOWABLE FILL IS A CONTROLLED LOW-STRENGTH MATERIAL (CLSM) AND SHALL MEET THE REQUIREMENTS OF ACI 229R (LATEST EDITION).

1 / S-32 SECTION

SCALE: 3/4" = 1'–0"

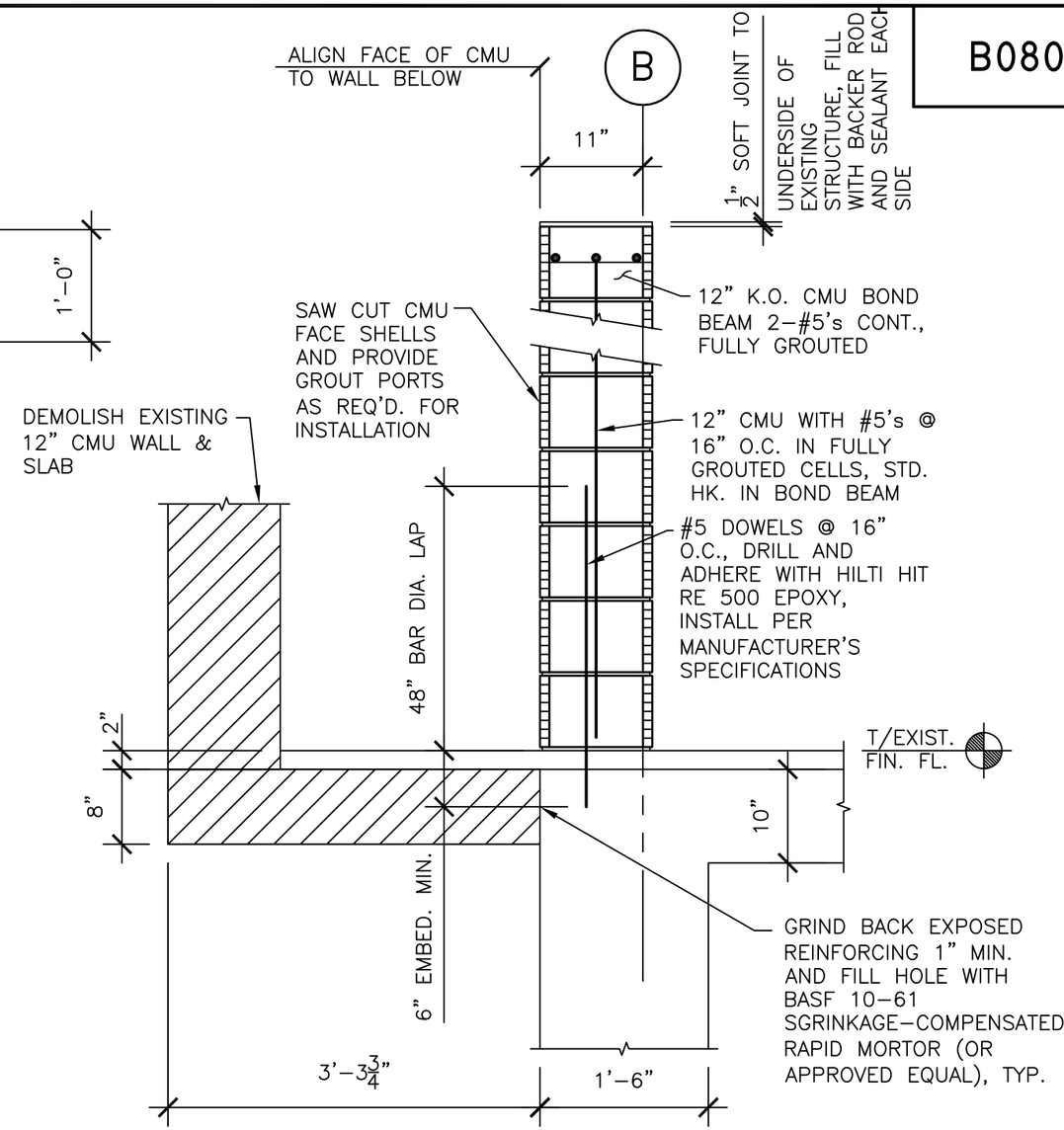

2 / S-32 WALL SECTION

SCALE: 3/4" = 1'–0"

billerreinhart ENGINEERING GROUP INC.
3434 colwell avenue suite 100, tampa, florida 33614
telephone : 813.908.7203 fax : 813.931.5200
email : info@billerreinhart.com
State of Florida Certificate of Authorization No. 9149

TO THE BEST OF THE ENGINEER'S KNOWLEDGE, THE PLANS AND SPECIFICATIONS COMPLY WITH THE APPLICABLE MINIMUM BUILDING CODES

ROBERT J. REINHART
FL. P.E. NO. 50076

EDT Engineering Design Technologies Corp.
P.O. Box 152403
Tampa, FL 33684-2403
813.289.8080
813.282.9184 FAX
engineering@edt1.com
Certificate of Authorization Number: 4795

CITY of TAMPA
WASTEWATER DEPARTMENT

KRAUSE PS REHABILITATION

SECTIONS & DETAILS

NO.	DAT	
1	1/27/15	CONFORMED

RED LINES
NO CHANGES

DRAWN: RC, KC
DESIGN: RR
QC: RR
DATE: 06/03/14

SHEET S-32

B080-057

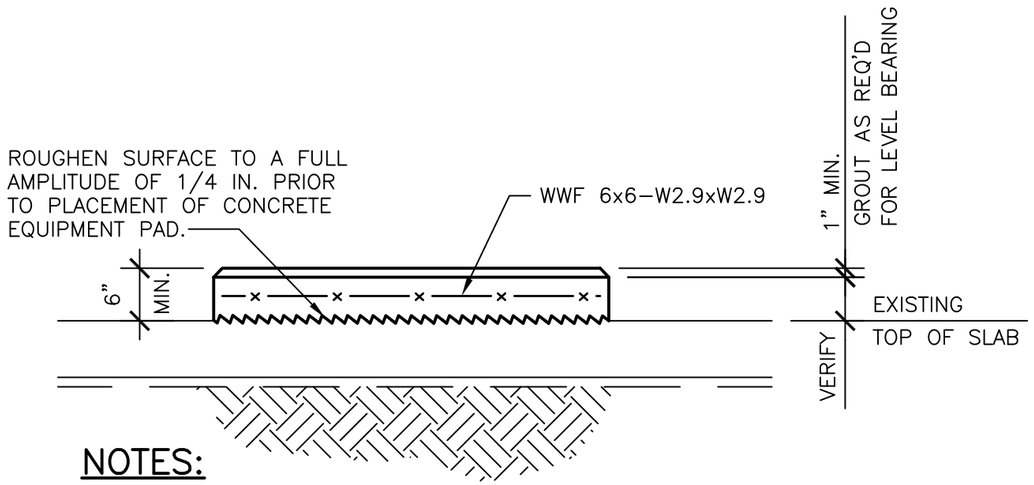

NOTES:

1. PAD SIZE IN PLAN SHALL BE AS REQUIRED BY MECHANICAL SPECIFICATIONS OR AS REQUIRED TO FULLY SUPPORT EQUIPMENT.
2. CONTRACTOR SHALL VERIFY EQUIPMENT PAD LOCATIONS WITH FINAL MECH. DRAWINGS AND SPECIFICATIONS PRIOR TO CONSTRUCTION. EQUIPMENT SHALL BE INSTALLED AS PER THE MANUFACTURER'S INSTRUCTIONS.

1 / S-33 MECHANICAL PAD

SCALE: 3/4" = 1'-0"

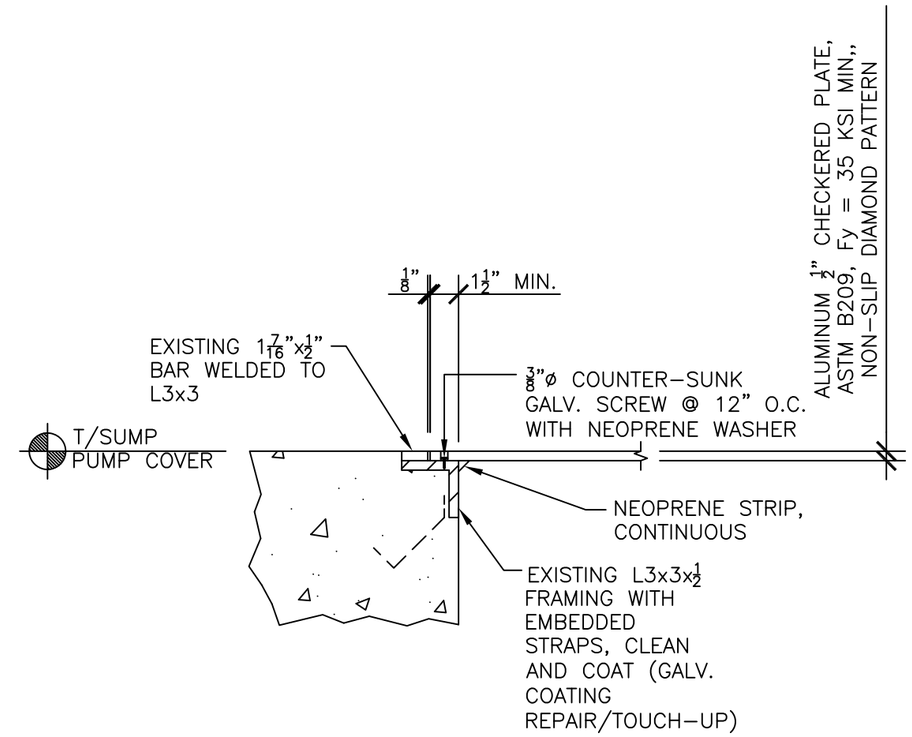

2 / S-33 SUMP PUMP COVER

SCALE: 1-1/2" = 1'-0"

billerreinhart ENGINEERING GROUP INC.
3434 colwell avenue suite 100, tampa, florida 33614
telephone : 813.908.7203 fax : 813.931.5200
email : info@billerreinhart.com
State of Florida Certificate of Authorization No. 9149

TO THE BEST OF THE ENGINEER'S KNOWLEDGE, THE PLANS AND SPECIFICATIONS COMPLY WITH THE APPLICABLE MINIMUM BUILDING CODES

ROBERT J. REINHART
FL. P.E. NO. 50076

EDT Engineering Design Technologies Corp.
P.O. Box 152403
Tampa, FL 33684-2403
813.289.8080
813.282.9184 FAX
engineering@edt1.com
Certificate of Authorization Number: 4795

CITY of TAMPA
WASTEWATER DEPARTMENT

KRAUSE PS REHABILITATION

SECTIONS & DETAILS

NO.	DATE	
1	1/27/15	CONFORMED

RED LINES

NO CHANGES

DRAWN: RC, KC
DESIGN: RR
QC: RR
DATE: 06/03/14

SHEET S-33

B080-058

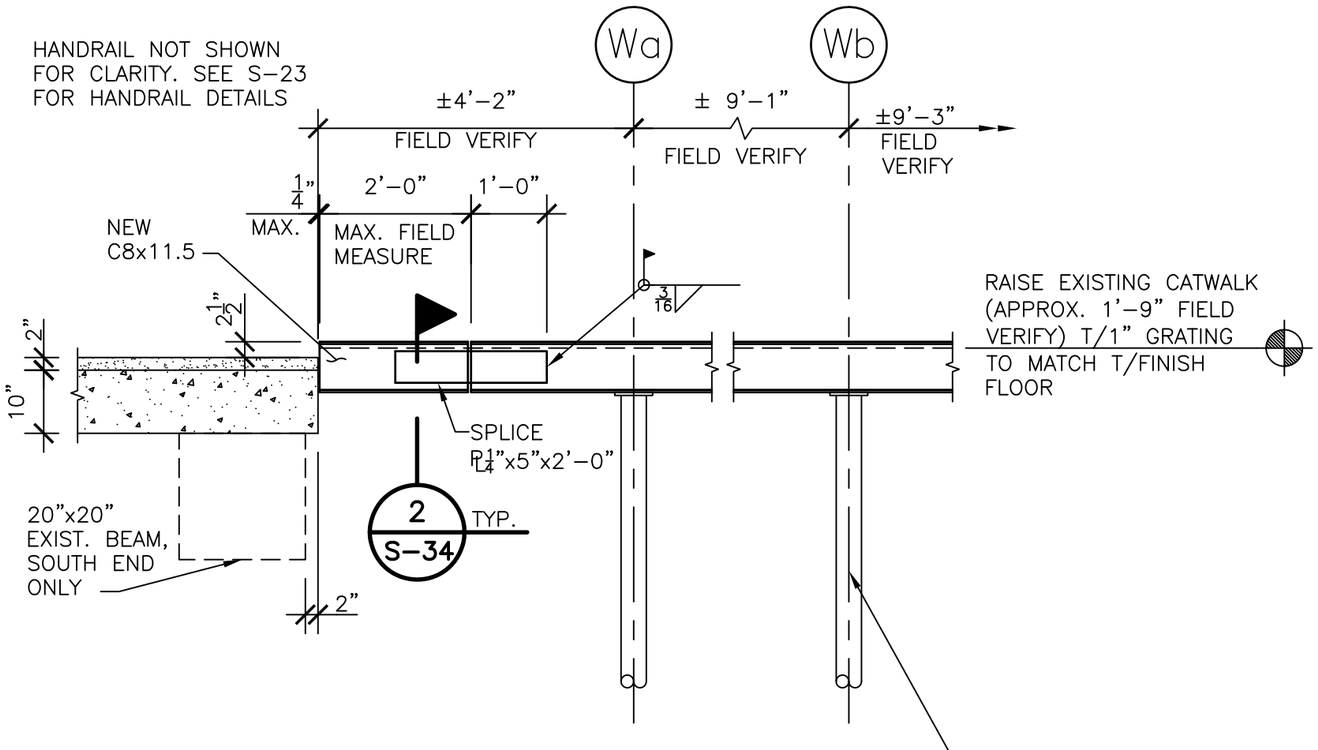

NOTES:

1. REMOVE EXISTING CATWALK STAIRS.
2. INSTALL NEW HANDRAIL/GUARDRAIL.
3. CLEAN AND RECOAT STEEL COMPONENTS.

AT 10 LOCATIONS, REMOVE AND REPLACE IN KIND ALL CATWALK SUPPORTS TO ELEVATE CATWALK FRAMING, INCLUDING BUT NOT LIMITED TO:

- COLUMN BASE AND CAP PLATES WITH ALL BOLTS AS REQ'D.
- 2 1/2"ø EXTRA STRONG PIPE COLUMNS
- ANGLE CROSS BRACING

1 S-34 CATWALK SECTION

SCALE: 1/2" = 1'-0"

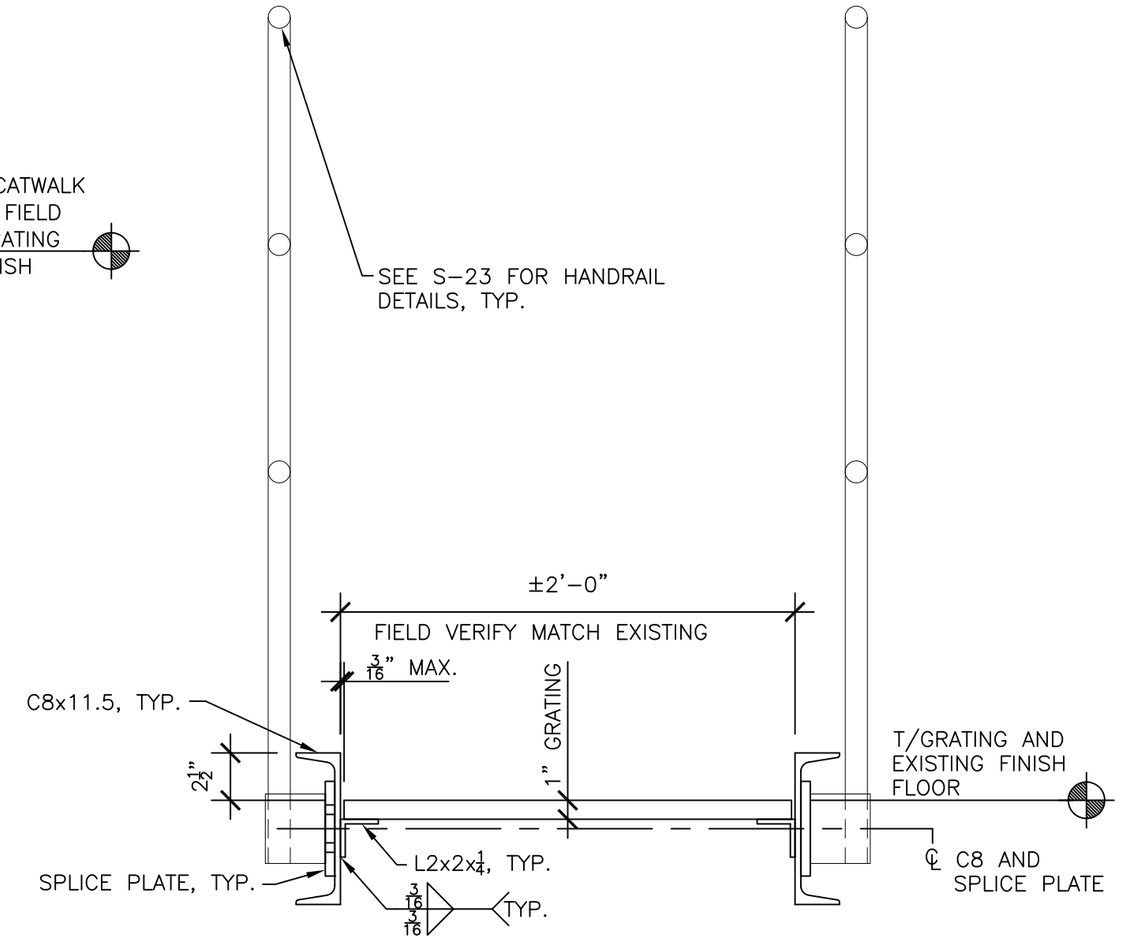

2 S-34 CATWALK SECTION

SCALE: 1-1/2" = 1'-0"

billerreinhart ENGINEERING GROUP INC.
3434 colwell avenue suite 100, tampa, florida 33614
telephone : 813.908.7203 fax : 813.931.5200
email : info@billerreinhart.com
State of Florida Certificate of Authorization No. 9149

TO THE BEST OF THE ENGINEER'S KNOWLEDGE, THE PLANS AND SPECIFICATIONS COMPLY WITH THE APPLICABLE MINIMUM BUILDING CODES

ROBERT J. REINHART
FL. P.E. NO. 50076

EDT Engineering Design Technologies Corp.
P.O. Box 152403
Tampa, FL 33684-2403
813.289.8080
813.282.9184 FAX
engineering@edt1.com

Certificate of Authorization Number: 4795

CITY of TAMPA
WASTEWATER DEPARTMENT

KRAUSE PS REHABILITATION

SECTIONS AND DETAILS

NO.	DATE	
1	1/27/15	CONFORMED

RED LINES

NO CHANGES

DRAWN: RC, KC
DESIGN: RR
CHK: RR
DATE: 06/03/14

SHEET S-34

B080-059

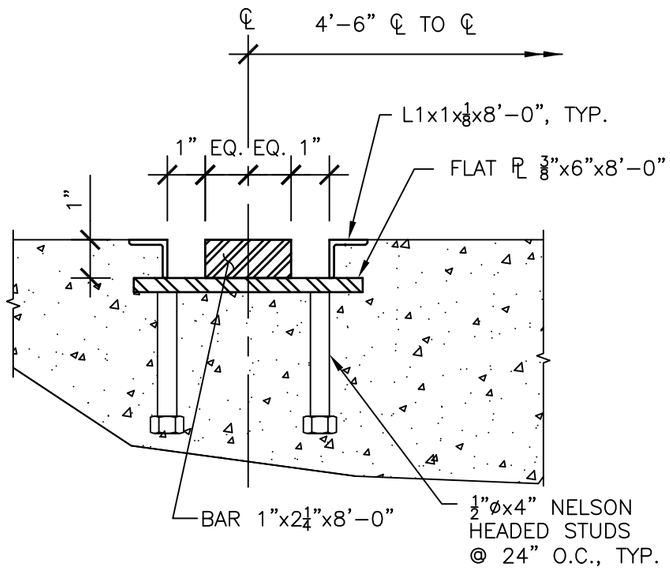

TYPICAL RAIL

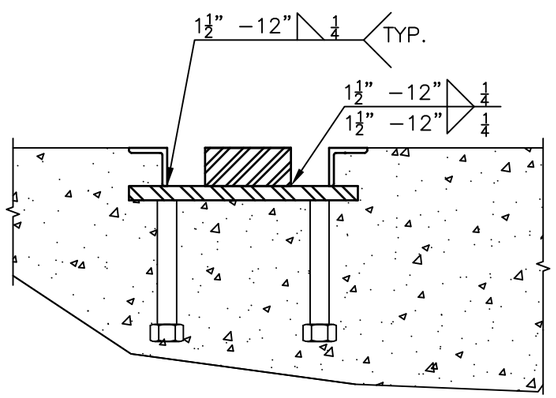

TYPICAL WELD

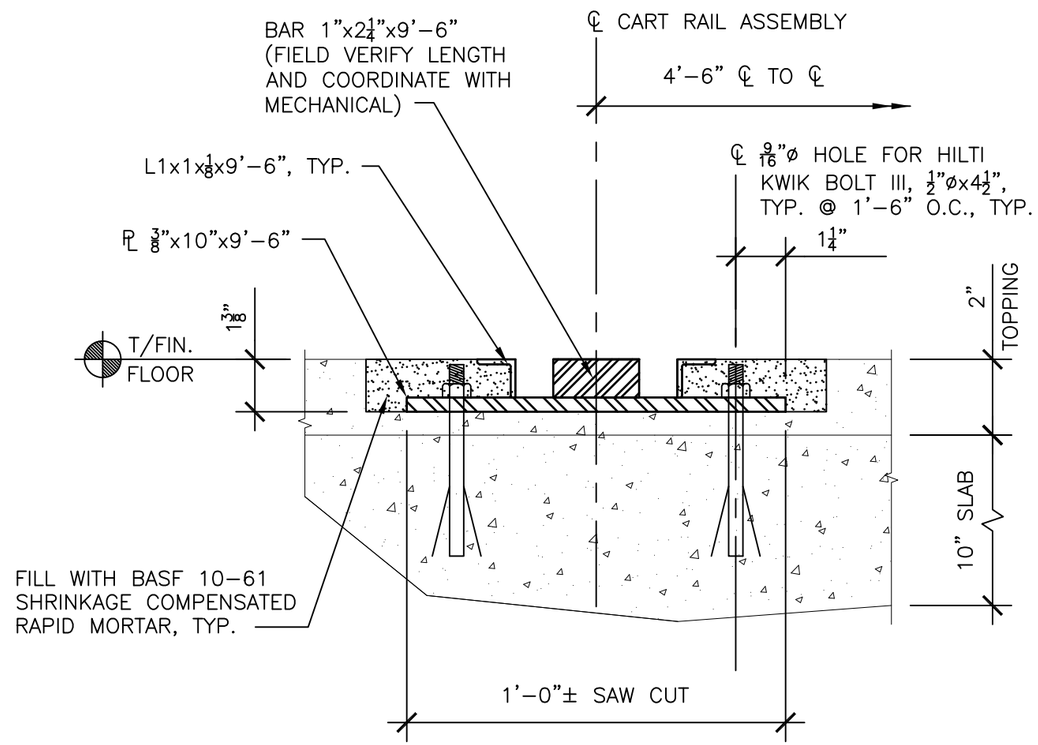

ALTERNATE @ INTERIOR EXISTING SLAB

NOTE: VERIFY CART RAIL ASSEMBLIES WITH CART MANUFACTURER

1 / S-35 RAIL DETAILS

SCALE: N.T.S.

billerreinhart ENGINEERING GROUP INC.
3434 colwell avenue suite 100, tampa, florida 33614
telephone : 813.908.7203 fax : 813.931.5200
email : info@billerreinhart.com
State of Florida Certificate of Authorization No. 9149

TO THE BEST OF THE ENGINEER'S KNOWLEDGE, THE PLANS AND SPECIFICATIONS COMPLY WITH THE APPLICABLE MINIMUM BUILDING CODES

ROBERT J. REINHART
FL. P.E. NO. 50076

EDT Engineering Design Technologies Corp.
P.O. Box 152403
Tampa, FL 33684-2403
813.289.8080
813.282.9184 FAX
engineering@edt1.com
Certificate of Authorization Number: 4795

CITY of TAMPA
WASTEWATER DEPARTMENT

KRAUSE PS REHABILITATION

SECTIONS & DETAILS

RED LINES

NO.	DATE
1	1/27/1

NO CHANGES

DRAWN: RC, KC
DESIGN: RR
QC: RR
DATE: 06/03/14

SHEET S-35

B080-060

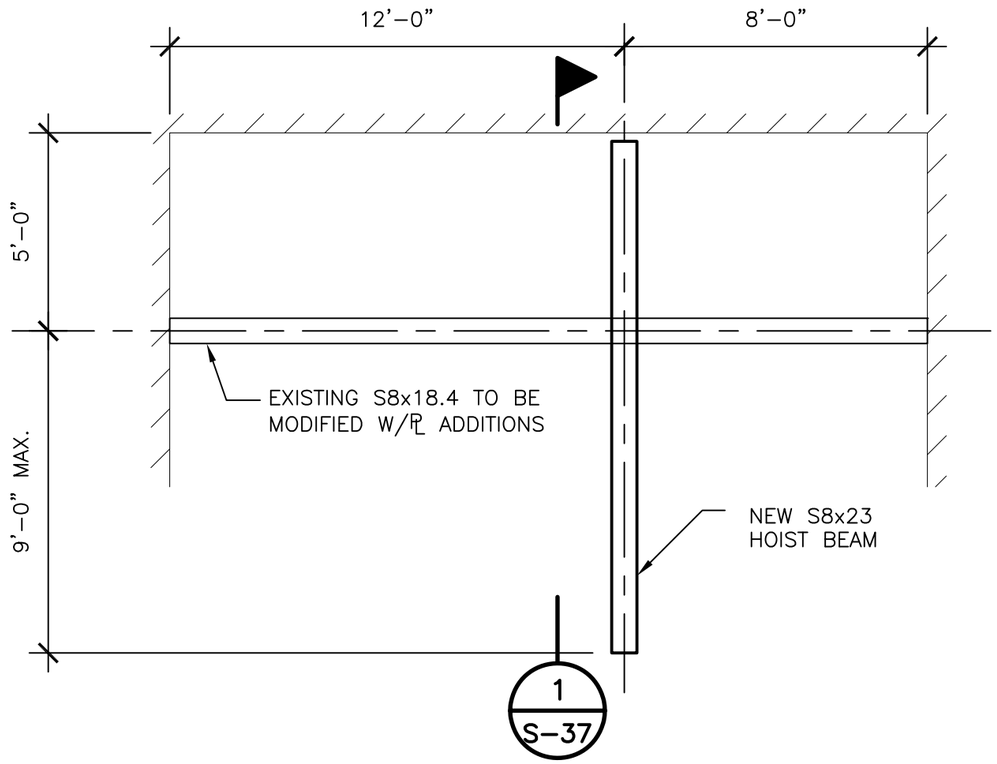

1 S-36 HOIST BEAM PLAN

SCALE: N.T.S.

billerreinhart ENGINEERING GROUP INC.
3434 colwell avenue suite 100, tampa, florida 33614
telephone : 813.908.7203 fax : 813.931.5200
email : info@billerreinhart.com
State of Florida Certificate of Authorization No. 9149

TO THE BEST OF THE ENGINEER'S KNOWLEDGE, THE PLANS AND SPECIFICATIONS COMPLY WITH THE APPLICABLE MINIMUM BUILDING CODES

ROBERT J. REINHART
FL. P.E. NO. 50076

EDT Engineering Design Technologies Corp.
P.O. Box 152403
Tampa, FL 33684-2403
813.289.8080
813.282.9184 FAX
engineering@edt1.com
Certificate of Authorization Number: 4795

CITY of TAMPA
WASTEWATER DEPARTMENT

KRAUSE PS REHABILITATION

HOIST BEAM PLAN

NO.	DATE	
1	1/27/15	CONFORMED

RED LINES

NO CHANGES

DRAWN: RC, KC
DESIGN: RR
QC: RR
DATE: 06/03/14

SHEET S-36

B080-061

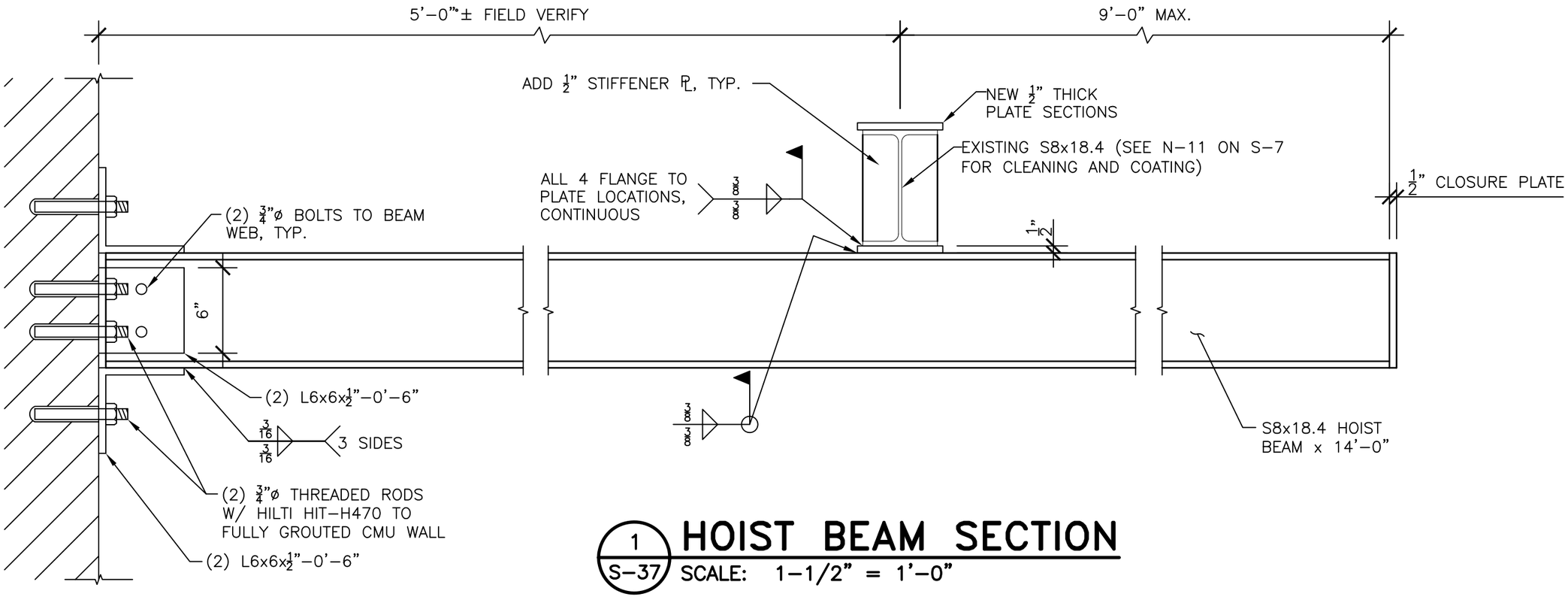

1 / S-37 **HOIST BEAM SECTION**

SCALE: 1-1/2" = 1'-0"

billerreinhart ENGINEERING GROUP INC.
3434 colwell avenue suite 100, tampa, florida 33614
telephone : 813.908.7203 fax : 813.931.5200
email : info@billerreinhart.com
State of Florida Certificate of Authorization No. 9149

TO THE BEST OF THE ENGINEER'S KNOWLEDGE, THE PLANS AND SPECIFICATIONS COMPLY WITH THE APPLICABLE MINIMUM BUILDING CODES

ROBERT J. REINHART
FL. P.E. NO. 50076

EDT Engineering Design Technologies Corp.
P.O. Box 152403
Tampa, FL 33684-2403
813.289.8080
813.282.9184 FAX
engineering@edt1.com
Certificate of Authorization Number: 4795

CITY of TAMPA
WASTEWATER DEPARTMENT

KRAUSE PS REHABILITATION

SECTIONS AND DETAILS

NO.	DATE	
1	1/27/15	CONFORMED

RED LINES

NO CHANGES

DRAWN: RC, KC
DESIGN: RR
CK: RR
DATE: 06/03/14

SHEET S-37

B080-062

LEGEND

SYMBOL	DESCRIPTION
	HEAVY DUTY SAFETY SWITCH
	TRANSFORMER
	FLUORESCENT OR LED FIXTURE – CEILING MTD.
	INCAND., HID OR LED FIXTURE – CEILING MTD.
	INCAND., FLUORESCENT OR LED FIXTURE – STANCHION MTD.
	INCAND., HID OR LED FIXTURE – WALL MTD.
	EMERGENCY EXIT LIGHT
	EMERGENCY LIGHT
	20A, 125V, 3–WIRE DUPLEX RECEPT. CTR. @ 18" AFF.
	20A, 125V, 3–WIRE GROUNDING DUPLEX RECEPT. CTR. @ 50" AFF.
	20A, 125V, 3–WIRE DUPLEX RECEPT. FED FROM DEDICATED CIRCUIT.
	BRANCH CIRCUIT PANELBOARD
	120V, 1ø CIRCUIT HOMERUN TO 1–POLE BRKR.
	SLASH MARKS DENOTE NO. OF WIRES; LONG – NEUTRAL, X – GROUND.
	240V OR 480V, 1ø CIRCUIT HOMERUN TO 2–POLE BRKR.
	208V OR 480V, 3ø CIRCUIT HOMERUN TO 3–POLE BRKR.
75	MOTOR, 75 HP
	LIMIT SWITCH – NORMALLY OPEN
MOV	MOTOR OPERATED VALVE
MSH	MOTOR SPACE HEATER
RTD	RESISTANCE TEMPERATURE DETECTOR
VIB	VIBRATION SENSOR

SYMBOL	DESCRIPTION
	DOWN CONDUCTOR TO GROUND ROD
3 600AF 600AT	CIRCUIT BREAKER, 600 AMPERE FRAME, 600 AMPERE TRIP
	OUTPUT REACTOR
50/51/51G	SOLID STATE TRIP UNIT w/ FUNCTIONS NOTED, 50 INSTANTANEOUS TRIP, 51 TIME DELAY TRIP, 51 GROUND FAULT TRIP
	CUSTOMER METERING
	LIMIT SWITCH – NORMALLY CLOSED
LS	LEVEL SWITCH
	LIQUID LEVEL SWITCH – NORMALLY OPEN
	LIQUID LEVEL SWITCH – NORMALLY CLOSED
	PRESSURE SWITCH – NORMALLY OPEN
	PRESSURE SWITCH – NORMALLY CLOSED
J	JUNCTION BOX, PULL BOX – SIZED PER NEC
	CONDUIT – DOWN
	CONDUIT – UP
	SELECTOR SWITCH – NORMALLY OPEN
xM	MOTOR STARTER COIL, x DESIGNATES MOTOR ID. NO.
Rx	RELAY COIL, x DESIGNATES ID. NO.
xxR–y	RELAY CONTACT – NORMALLY OPEN, xx DESIGNATES RELAY ID. NO. & y DESIGNATES CONTACT NO.
xxR–y	RELAY CONTACT – NORMALLY CLOSED, xx DESIGNATES RELAY ID. NO. & y DESIGNATES CONTACT NO.
xMOL	MOTOR OVERLOAD RELAY – x DESIGNATES MOTOR I.D. NO.
	SOLENOID VALVE
	FUSE
	KEYED NOTE
X	LED PILOT LIGHT, x INDICATES COLOR, G=GREEN, R=RED, B=BLUE, A=AMBER
M (METER, PLAN VIEW)	TEC METER, RATING AS INDICATED ON DRAWINGS. CENTER METER 4'–6" ABOVE TOP OF PLATFORM.

SYMBOL	DESCRIPTION
SPD	SURGE PROTECTIVE DEVICE
PM	PHASE MONITOR
PB	PUSH BUTTON
K1	KIRK KEY INTERLOCK
M100	CONDUIT BUBBLE – REFERENCE CONDUIT SCHEDULE

ABBREVIATIONS

ø	PHASE
A	AMPERES
AF	AMPERE FRAME
AFD	ADJUSTABLE FREQUENCY DRIVE
AFF	ABOVE FINISHED FLOOR
AT	AMPERE TRIP
ATS	AUTOMATIC TRANSFER SWITCH
C	CONDUIT
CAT	CATALOG
CLG	CEILING
CKT	CIRCUIT
CTR	CENTER
DISC	DISCONNECT
DT	DOUBLE THROW
DV	PUMP DISCHARGE VALVE
DWG	DRAWING
ELEC	ELECTRICAL, ELECTRIC
E.O.	ELECTRICALLY OPERATED
ESD	EMERGENCY SHUTDOWN
EXH	EXHAUST
GFCI	GROUND FAULT CIRCUIT INTERRUPTER
HP	HORSEPOWER
JB, JBOX	JUNCTION BOX
KW	KILOWATTS
KVA	KILOVOLT–AMPERE
LPX	LIGHTING PANEL X
MIN.	MINIMUM
MCC	MOTOR CONTROL CENTER
MLO	MAIN LUGS ONLY
MNTD	MOUNTED
MOV	MOTOR OPERATED VALVE
MSH	MOTOR SPACE HEATER
NC	NORMALLY CLOSED
NO	NORMALLY OPEN
PB	PUSH BUTTON
PSV	PUMP SUCTION VALVE
PT	PRESSURE TRANSMITTER
PWR	POWER
RCBP	REMOTE CIRCUIT BREAKER PANEL
RECEPT	RECEPTACLE
RTD	RESISTANCE TEMPERATURE DETECTOR
SPD	SURGE PROTECTIVE DEVICE
SW	SWITCH
SWBD	SWITCHBOARD
TEC	TAMPA ELECTRIC COMPANY
THRU	THROUGH
TR	TRIP
TT	TEMPERATURE TRANSMITTER
TVSS	TRANSIENT VOLTAGE SURGE SUPPRESSOR
TYP	TYPICAL
UON	UNLESS OTHERWISE NOTED
V	VOLT
VIB	VIBRATION
W	WIRE
w/	WITH
XFMR	TRANSFORMER
XFR	TRANSFER
XMTR	TRANSMITTER

ENGINEER OF RECORD:
BOB E. HALLMAN, P.E.
FLORIDA REGISTRATION NO. 20761

Engineering Design Technologies Corp.
P.O. Box 152403
Tampa, FL 33684-2403
813.289.8080
813.282.9184 FAX
engineering@edt1.com
Certificate of Authorization Number: 4795

CITY of TAMPA
WASTEWATER DEPARTMENT

KRAUSE PS REHABILITATION

ELECTRICAL LEGEND & ABBREVIATIONS

NO.	DATE	REVISIONS

DRAWN: RWB
DESIGN: STK
QC: BEH
DATE: 05/01/14

SHEET E-1

B080-063

GENERAL NOTES:

1. CONTRACTOR SHALL SUBMIT SHOP DRAWINGS FOR APPROVAL AND SHALL RECEIVE SAID APPROVAL PRIOR TO PURCHASING EQUIPMENT OR COMMENCING CONSTRUCTION.
2. ALL SHOP DRAWINGS SUBMITTED TO ENGINEER FOR APPROVAL SHALL BE ORIGINAL COPIES. COPIES OF SHOP DRAWINGS OR DATA SHEETS TRANSMITTED BY FACSIMILE (FAX) WILL NOT BE REVIEWED.
3. AFTER CORE DRILLING HOLES THROUGH REINFORCED CONCRETE WALLS AND FLOORS, COAT EXPOSED REINFORCING STEEL CONCRETE SURFACES WITH EMACO P24 BY BASF. AFTER ROUTING CONDUIT THROUGH HOLE, FILL AND FINISH CONCRETE WITH A SHRINKAGE COMPENSATING REPAIR MORTAR WITH CORROSION INHIBITING PROPERTIES, EMACO S66 C1 BY BASF. REFERENCE STRUCTURAL DRAWINGS.
4. SHIELD AND DRAIN WIRE FOR EACH ANALOG SIGNAL (4–20 mA) CABLE SHALL BE GROUNDED AT THE PLC ONLY. THE SHIELD AND DRAIN WIRE AT EACH FIELD DEVICE SHALL BE NEATLY TRIMMED & TAPED w/ (2) LAYERS OF VINYL ELECTRICAL TAPE (SCOTCH 33+).
5. ALL CONDUCTORS SHALL BE STRANDED COPPER, #12 AWG MIN. w/ THHN INSULATION, UNLESS OTHERWISE NOTED.
6. THE WET WELL CLASSIFICATION IS CLASS I, GROUPS C & D, DIVISION 1 (HAZARDOUS AREA). NEC ARTICLES 500 & 501 ARE APPLICABLE FOR WIRING METHODS USED IN THE WET WELL.
7. ALL WIRING SHALL BE IDENTIFIED w/ NUMBERS AT ALL TERMINALS AND ON WIRING DIAGRAMS. MARKERS SHALL BE THOMAS & BETTS INSTA–CODE CLIP–ON MARKERS OR APPROVED EQUAL.
8. ALL CIRCUITS SHALL HAVE GROUNDING CONDUCTORS ROUTED INSIDE THE CONDUIT w/ POWER CONDUCTORS.
9. ALL POWER CONDUCTORS AND MOTOR WINDINGS SHALL BE TESTED WITH A 600 VOLT INSULATION RESISTANCE TESTER "MEGGER". INSULATION READINGS SHALL BE A MINIMUM OF 20 MEGOHMS TO GROUND (DO NOT TEST LOW–VOLTAGE CONTROLS). INSULATION READINGS THAT ARE LESS THAN 20 MEGOHMS SHALL REQUIRE THE REPLACEMENT OF THE CONDUCTOR OR MOTOR AS APPLICABLE.
10. NEATLY COIL & TAPE SPARE CONDUCTORS w/ VINYL ELECTRICAL TAPE (SCOTCH 33+) U.O.N.
11. ALL CONDUCTOR LENGTHS SHALL BE CONTINUOUS. NO SPLICES OR CONDUCTOR TERMINATIONS SHALL BE PERMITTED UNLESS SPECIFICALLY DESIGNATED IN THE DRAWINGS.
12. LIQUIDTIGHT FLEXIBLE NON–METALLIC CONDUIT CONNECTIONS TO EACH MOTOR SHALL NOT EXCEED A LENGTH OF 36".
13. ALL THREADED CONNECTIONS SHALL BE COATED w/ COPPER SHIELD ANTI–SEIZE COMPOUND MANUFACTURED BY THOMAS & BETTS (T & B).
14. ALL UNDERGROUND CONDUITS SHALL BE BURIED w/ A MINIMUM OF 24" COVER UNLESS OTHERWISE NOTED.
15. CONDUIT ROUTING SHOWN IS DIAGRAMMATIC UNLESS OTHERWISE NOTED. CONTRACTOR SHALL OPTIMIZE THE CONDUIT ROUTING, TAKING INTO ACCOUNT THE FIELD CONDITIONS AND THE FINAL EQUIPMENT SELECTED AND APPROVED IN THE SUBMITTALS.
16. PULL BOXES SHALL BE INSTALLED AS NECESSARY TO FACILITATE WIRE PULLS AND TO AVOID EXCESSIVE PULLING TENSION ON WIRING. IN NO CASE SHALL CONDUIT LENGTHS EXCEED 150' OR THE EQUIVALENT OF FOUR QUARTER BENDS (360 DEGREES TOTAL) WITHOUT A PULL BOX. PULL BOXES SHALL BE SIZED IN ACCORDANCE WITH ARTICLE 314 OF THE NEC.
17. PROVIDE PVC SLEEVES FOR ALL METALLIC CONDUIT PENETRATIONS THROUGH CONCRETE. WHERE ALUMINUM SURFACES SUCH AS BOXES, CONDUIT OR STRUCTURAL SUPPORTS COME IN CONTACT WITH INCOMPATIBLE METALS, LIME, MORTAR, CONCRETE OR OTHER MASONRY MATERIALS, THE CONTACT AREA SHALL BE GIVEN ONE FIELD COAT OF KOPPERS METAL PASSIVATOR NO. 40 AND ONE COAT OF KOPPERS BITUMASTIC SUPER SERVICE BLACK OR TWO COATS OF ASPHALT VARNISH CONFORMING TO FED. SPEC. TT–V–51.
18. ALL CONDUIT TRENCHES SHALL BE DUG BY HAND TO AVOID DAMAGING UNDERGROUND PIPING AND UTILITIES.
19. ALL UNDERGROUND CONDUITS SHALL BE ENCASED IN STEEL REINFORCED CONCRETE. CONCRETE ENCASEMENT SHALL BE IN ACCORDANCE w/ THE DUCT BANK DETAIL.
20. THE CONTRACTOR SHALL REPLACE ALL EXISTING PAVING, STABILIZED EARTH, CURBS, DRIVEWAYS, FENCES & OTHER IMPROVEMENTS WITH THE SAME TYPE OF MATERIAL THAT WAS REMOVED DURING CONSTRUCTION OR AS DIRECTED BY THE ENGINEER.
21. CONTRACTOR SHALL MAINTAIN A CLEAR PATH FOR ALL SURFACE WATER DRAINAGE STRUCTURES & DITCHES DURING ALL PHASES OF CONSTRUCTION.
22. ALL CONDUIT SHALL BE SUPPORTED AT MAXIMUM 5'–0" INTERVALS.
23. ALL FASTENING AND MOUNTING HARDWARE SHALL BE 316 SS. CAD PLATED HARDWARE WILL NOT BE ACCEPTED.
24. ALL UNISTRUT SHALL BE 1 5/8" x 1 5/8" x 12 GA. 316 STAINLESS STEEL.
25. CONTRACTOR SHALL FIELD VERIFY ALL MECHANICAL EQUIPMENT SIZES AND RATINGS PRIOR TO CONNECTING.
26. CONTRACTOR SHALL FIELD VERIFY ALL EQUIPMENT LOCATIONS AND CONNECTIONS PRIOR TO COMMENCING CONSTRUCTION.
27. ALL PANELS, PANEL COMPONENTS, DISCONNECTS, SWITCHES & EQUIPMENT COVERPLATES SHALL BE LABELED w/ NAMEPLATES. NAMEPLATES SHALL BE THREE PLY PHENOLIC BLACK–WHITE–BLACK ENGRAVED THROUGH THE FIRST BLACK LAYER. LETTERING SHALL BE 0.5 CM (3/16") MIN. EDGES OF NAMEPLATES SHALL BE BEVELED 45°. THE NAMEPLATES SHALL BE SECURED TO EQUIPMENT WITH STAINLESS STEEL SCREWS OR RIVETS. THE USE OF GLUE IS NOT PERMITTED.
28. ALL INSTALLED COMPONENTS SHALL BE LISTED BY UNDERWRITERS LABORATORY (UL), OR SIMILAR NATIONALLY RECOGNIZED TESTING LABORATORY.
29. ALL EQUIPMENT SHALL BE INSTALLED AT AN ELEVATION ABOVE THE 100 YEAR FLOOD ELEVATION ESTABLISHED BY FEMA AND/OR LOCAL AUTHORITIES.

    ALL INSTALLATIONS SHALL BE IN ACCORDANCE WITH CITY OF TAMPA CODE 5–111.6.1.5 CITY OF TAMPA CODE CHAPTER 5 ISSUED 10/01/2005.
30. REFERENCE PLAN & SECTION DRAWINGS FOR EQUIPMENT LOCATIONS.
31. COORDINATE ALL INSTALLATIONS w/ ALL OTHER TRADES.
32. THE CONTRACTOR SHALL NOTIFY THE ENGINEER IMMEDIATELY WHEN CONFLICTS BETWEEN DRAWINGS & ACTUAL CONDITIONS ARE DISCOVERED.
33. ALL "AS BUILT" DRAWINGS PROVIDED BY THE CONTRACTOR SHALL BE SIGNED AND DATED WITH CHANGES CLEARLY NOTED IN RED. ADDITIONALLY, THE PRINTED NAME OF THE INDIVIDUAL SIGNING THE "AS BUILT" DRAWINGS ALONG WITH THAT PERSON'S COMPANY AFFILIATION SHALL BE INCLUDED. IF NO CHANGES WERE MADE DURING CONSTRUCTION, A NOTE DESIGNATING "NO CHANGES" SHALL BE INCLUDED ON THE "AS BUILT" DRAWINGS.
34. ALL EXISTING INSTALLATIONS DENOTED ON THE DRAWINGS ARE FOR CONTRACTOR'S REFERENCE ONLY. ALL EXISTING INSTALLATIONS SHALL BE FIELD VERIFIED PRIOR TO SUBMITTING A BID & PRIOR TO COMMENCING CONSTRUCTION.
35. PROVIDE A MINIMUM OF 3'–0" CLEARANCE IN FRONT OF ALL ELECTRICAL EQUIPMENT IN ACCORDANCE w/ ARTICLE 110 OF THE NEC.
36. ALL ELECTRICAL WORK SHALL BE PERFORMED IN ACCORDANCE w/ THE LATEST EDITION OF THE NEC AND APPLICABLE LOCAL ORDINANCES.
37. ALL CONDUITS ROUTED IN CONCRETE SHALL BE INSTALLED WITH A SEPARATION BETWEEN CONDUITS OF NOT LESS THAN 3 DIAMETERS (CENTER–TO–CENTER) & IN ACCORDANCE WITH AMERICAN CONCRETE INSTITUTE STANDARD NO. 318–89.
38. ALL CONDUIT EXPOSED ABOVE GRADE SHALL BE RIGID HEAVY WALL ALUMINUM, UNLESS OTHERWISE NOTED. CONDUITS EXTENDING BELOW GRADE SHALL BE RIGID HEAVY WALL ALUMINUM CONDUIT THROUGH AND INCLUDING THE FIRST 90 DEGREE ELBOW (OR EQUIVALENT SET OF FITTINGS) INSTALLED BELOW GRADE. ALL PVC CONDUIT SHALL BE SCHEDULE 80. CONNECTIONS TO PVC CONDUIT SHALL BE MADE w/ A RIGID ALUMINUM TO PVC CONDUIT ADAPTER.

    ALL CONDUIT ROUTED IN THE WET WELL SHALL BE RIGID HEAVY WALL ALUMINUM w/ 40 MIL PVC EXTERIOR COATING & 2 MIL BLUE URETHANE INTERIOR COATING. OCAL–BLUE SERIES CONDUIT MANUFACTURED BY THOMAS & BETTS OR EQUAL.

ENGINEER OF RECORD:
BOB E. HALLMAN, P.E.
FLORIDA REGISTRATION NO. 20761

Engineering Design Technologies Corp.
P.O. Box 152403
Tampa, FL 33684-2403
813.289.8080
813.282.9184 FAX
engineering@edt1.com
Certificate of Authorization Number: 4795

CITY of TAMPA
WASTEWATER DEPARTMENT

KRAUSE PS REHABILITATION

ELECTRICAL GENERAL NOTES

NO.	DATE	REVISIONS

DRAWN: RWB
DESIGN: STK
QC: BEH
DATE: 05/01/14

SHEET E-2

B080-064

NOTES:

- DENOTES EXISTING EQUIPMENT TO BE REMOVED. ITEM SHALL BE REMOVED FROM PREMISES AND DISPOSED OF PROPERLY. UNLESS OTHERWISE NOTED, REMOVE ALL ASSOCIATED CONDUIT & WIRING CONNECTED TO EQUIPMENT TO BE REMOVED, INCLUDING ABANDONED CONDUIT & WIRING.

1. ALL EQUIPMENT, CONDUIT & WIRING INCLUDED ON THIS DRAWING ARE EXISTING. CONTRACTOR SHALL VISIT THE SITE & FAMILIARIZE HIMSELF WITH THE EXISTING CONDITIONS BEFORE SUBMITTING A BID OR COMMENCING CONSTRUCTION.
2. COORDINATE ALL DEMOLITION ACTIVITIES WITH THE CITY AND ALL TRADES.
3. ALL EXISTING INSTALLATIONS DENOTED ON THE DRAWINGS ARE FOR CONTRACTORS REFERENCE ONLY. ALL EXISTING INSTALLATIONS SHALL BE FIELD VERIFIED PRIOR TO SUBMITTING A BID AND PRIOR TO COMMENCING CONSTRUCTION.
4. COORDINATE WITH THE CITY FOR A LIST OF EQUIPMENT TO BE SALVAGED.

NORTH

4 2 0 6 12

SCALE: 3/16" = 1'-0"

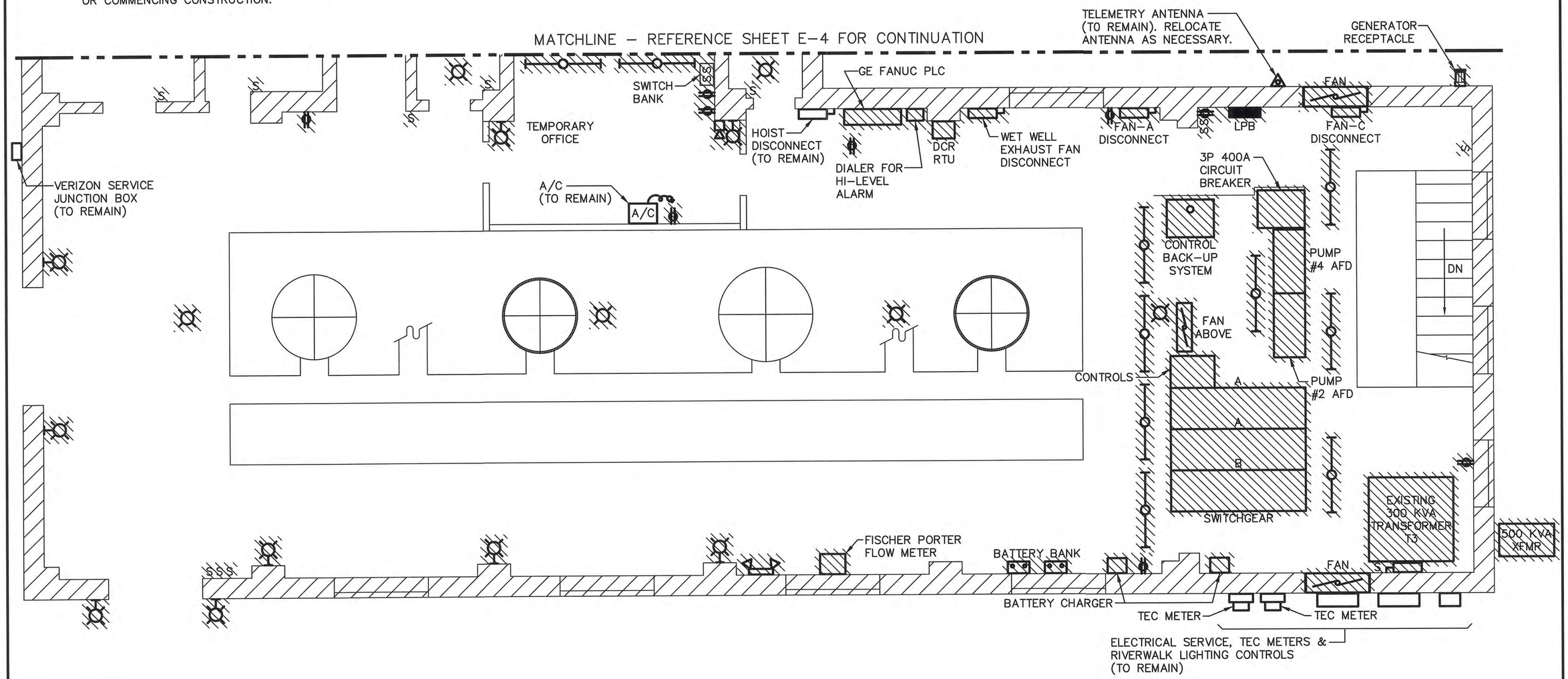

ENGINEER OF RECORD:
BOB E. HALLMAN, P.E.
FLORIDA REGISTRATION NO. 20761

EDT
Engineering Design Technologies Corp.
P.O. Box 152403
Tampa, FL 33684-2403
813.289.8080
813.282.9184 FAX
engineering@edt1.com
Certificate of Authorization Number: 4795

CITY of TAMPA
WASTEWATER DEPARTMENT

KRAUSE PS REHABILITATION

ELECTRICAL DEMOLITION PLAN
(UPPER LEVEL)
(SHEET 1 OF 2)

NO.	DATE	REVISIONS

DRAWN: RWB
DESIGN: STK
QC: BEH
DATE: 05/01/14

SHEET E-3

B080-065

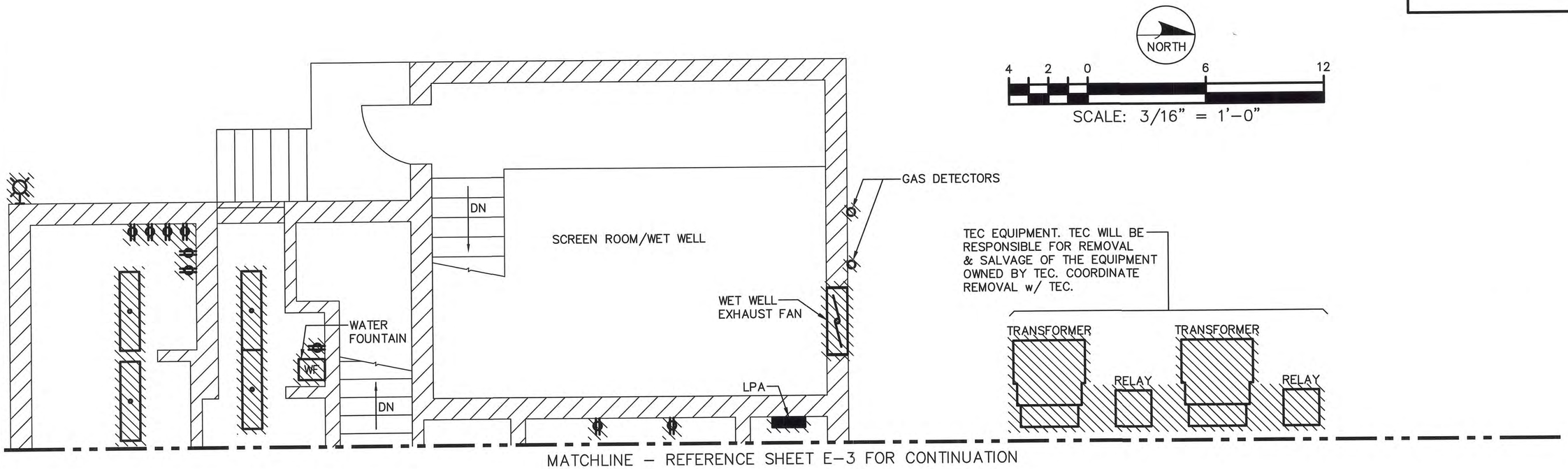

NOTES:

– DENOTES EXISTING EQUIPMENT TO BE REMOVED. ITEM SHALL BE REMOVED FROM PREMISES AND DISPOSED OF PROPERLY. UNLESS OTHERWISE NOTED, REMOVE ALL ASSOCIATED CONDUIT & WIRING CONNECTED TO EQUIPMENT TO BE REMOVED, INCLUDING ABANDONED CONDUIT & WIRING.

1. ALL EQUIPMENT, CONDUIT & WIRING INCLUDED ON THIS DRAWING ARE EXISTING. CONTRACTOR SHALL VISIT THE SITE & FAMILIARIZE HIMSELF WITH THE EXISTING CONDITIONS BEFORE SUBMITTING A BID OR COMMENCING CONSTRUCTION.
2. COORDINATE ALL DEMOLITION ACTIVITIES WITH THE CITY AND ALL TRADES.
3. ALL EXISTING INSTALLATIONS DENOTED ON THE DRAWINGS ARE FOR CONTRACTORS REFERENCE ONLY. ALL EXISTING INSTALLATIONS SHALL BE FIELD VERIFIED PRIOR TO SUBMITTING A BID AND PRIOR TO COMMENCING CONSTRUCTION.
4. COORDINATE WITH THE CITY FOR A LIST OF EQUIPMENT TO BE SALVAGED.

ENGINEER OF RECORD:
BOB E. HALLMAN, P.E.
FLORIDA REGISTRATION NO. 20761

EDT
Engineering Design Technologies Corp.
P.O. Box 152403
Tampa, FL 33684-2403
813.289.8080
813.282.9184 FAX
engineering@edt1.com
Certificate of Authorization Number: 4795

CITY of TAMPA
WASTEWATER DEPARTMENT

KRAUSE PS REHABILITATION

ELECTRICAL DEMOLITION PLAN
(UPPER LEVEL)
(SHEET 2 OF 2)

NO.	DATE	REVISIONS

DRAWN: RWB
DESIGN: STK
QC: BEH
DATE: 05/01/14

SHEET E-4

B080-066

NOTES:

– DENOTES EXISTING EQUIPMENT TO BE REMOVED. ITEM SHALL BE REMOVED FROM PREMISES AND DISPOSED OF PROPERLY. UNLESS OTHERWISE NOTED, REMOVE ALL ASSOCIATED CONDUIT & WIRING CONNECTED TO EQUIPMENT TO BE REMOVED, INCLUDING ABANDONED CONDUIT & WIRING.

1. ALL EQUIPMENT, CONDUIT & WIRING INCLUDED ON THIS DRAWING ARE EXISTING. CONTRACTOR SHALL VISIT THE SITE & FAMILIARIZE HIMSELF WITH THE EXISTING CONDITIONS BEFORE SUBMITTING A BID OR COMMENCING CONSTRUCTION.
2. COORDINATE ALL DEMOLITION ACTIVITIES WITH THE CITY AND ALL TRADES.
3. ALL EXISTING INSTALLATIONS DENOTED ON THE DRAWINGS ARE FOR CONTRACTORS REFERENCE ONLY. ALL EXISTING INSTALLATIONS SHALL BE FIELD VERIFIED PRIOR TO SUBMITTING A BID AND PRIOR TO COMMENCING CONSTRUCTION.
4. FIELD EVALUATE EXISTING CONDITIONS IN THE LOWER LEVEL ELECTRICAL ROOM. CONTRACTOR SHALL PROVIDE A WRITTEN PLAN TO THE CITY FOR REMOVAL OF EQUIPMENT IN THIS AREA. CONSIDERATION SHOULD BE GIVEN TO SIZE & WEIGHT OF EQUIPMENT TO BE REMOVED, LIMITED ACCESS TO LOWER AREA & SUPPORTS (AND BRACING) FROM EXISTING STRUCTURE FOR HOISTING EQUIPMENT FROM THE LOWER LEVEL.
5. COORDINATE WITH THE CITY FOR A LIST OF EQUIPMENT TO BE SALVAGED.

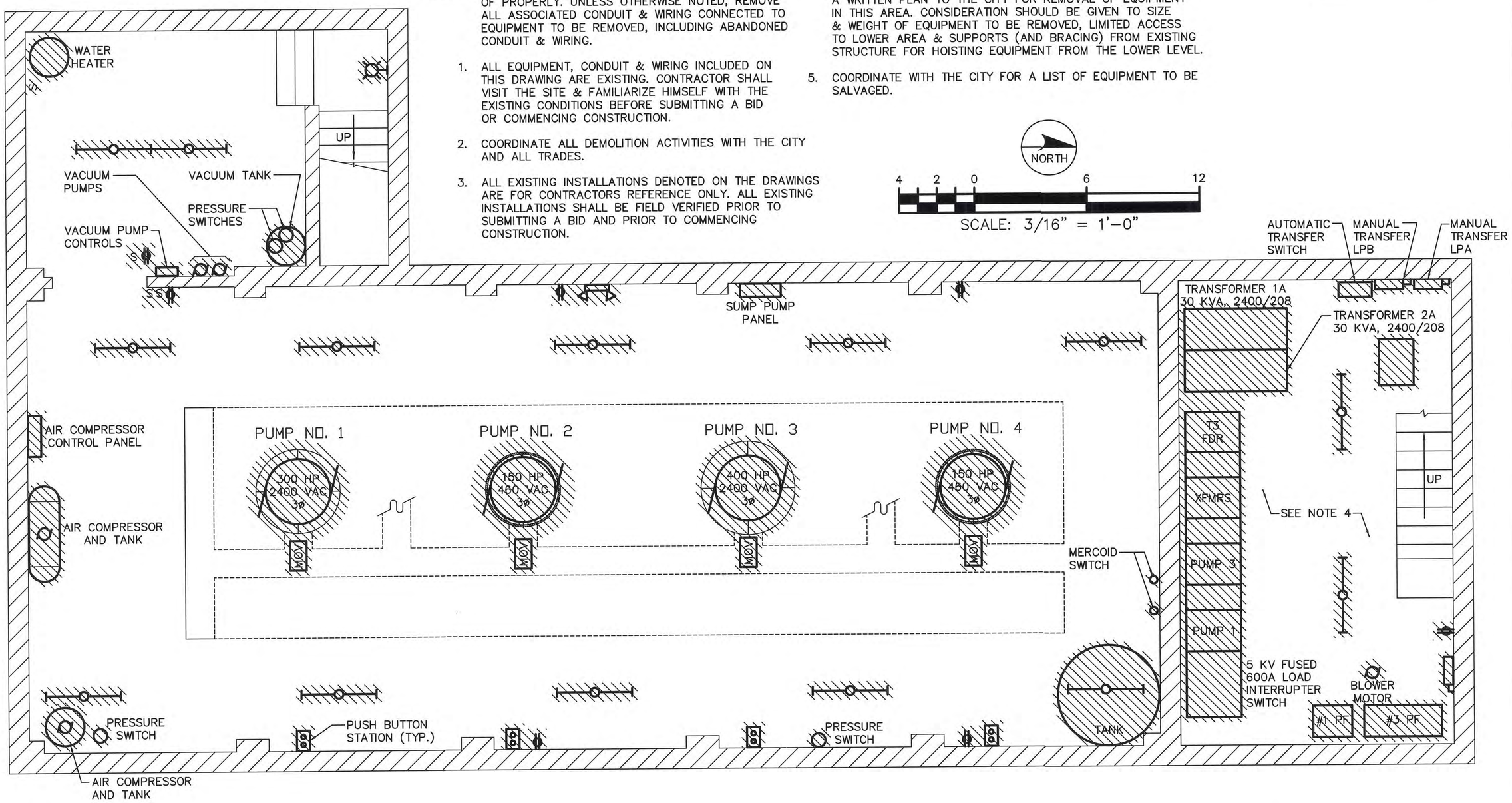

ENGINEER OF RECORD:
BOB E. HALLMAN, P.E.
FLORIDA REGISTRATION NO. 20761

EDT
Engineering Design Technologies Corp.
P.O. Box 152403
Tampa, FL 33684-2403
813.289.8080
813.282.9184 FAX
engineering@edt1.com
Certificate of Authorization Number: 4795

CITY of TAMPA
WASTEWATER DEPARTMENT

KRAUSE PS REHABILITATION

ELECTRICAL DEMOLITION PLAN (LOWER LEVEL)

NO.	DATE	REVISIONS

DRAWN: RWB
DESIGN: STK
QC: BEH
DATE: 05/01/14

SHEET E-5

B080-067

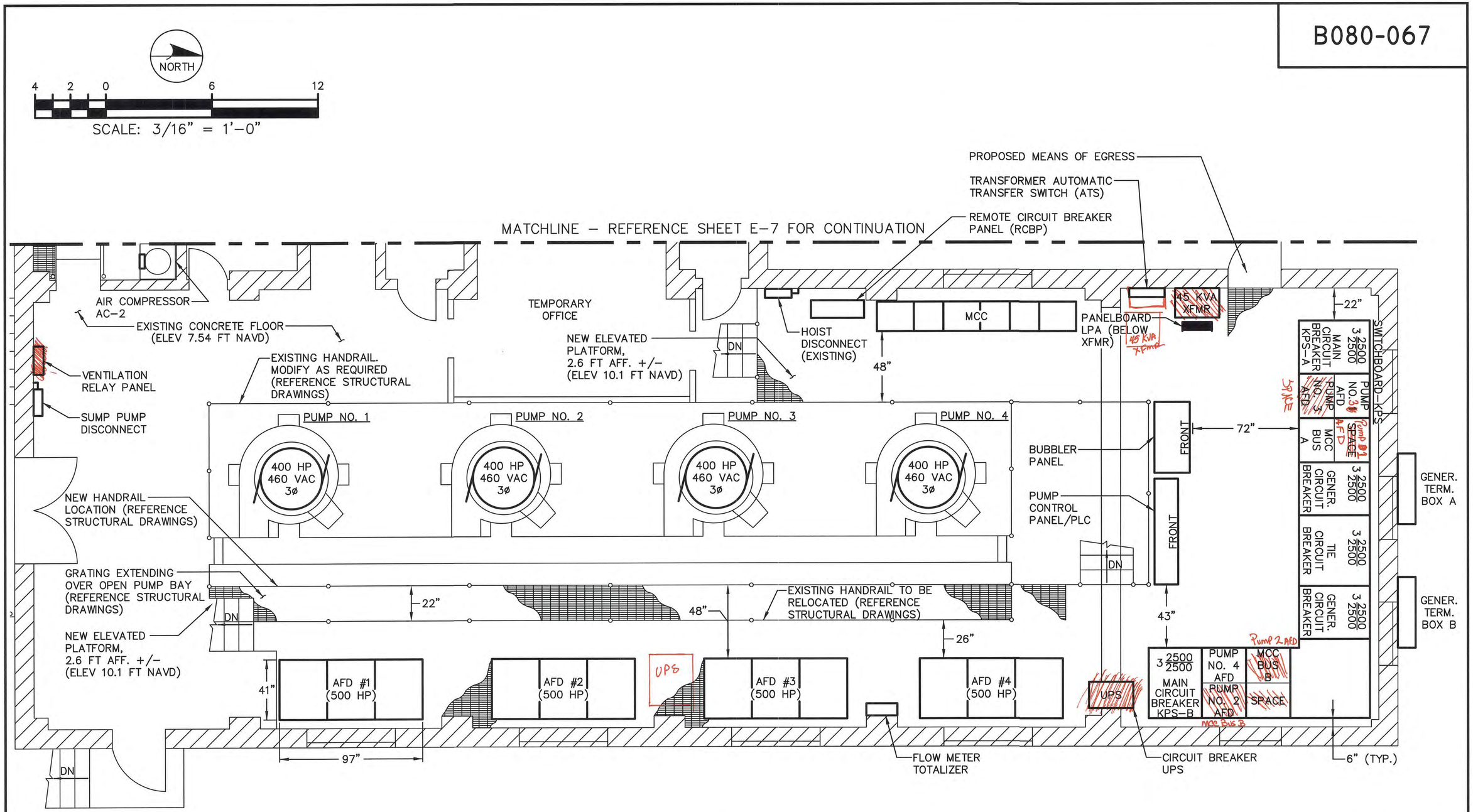

ENGINEER OF RECORD:
BOB E. HALLMAN, P.E.
FLORIDA REGISTRATION NO. 20761

EDT
Engineering Design Technologies Corp.
P.O. Box 152403
Tampa, FL 33684-2403
813.289.8080
813.282.9184 FAX
engineering@edt1.com
Certificate of Authorization Number: 4795

CITY of TAMPA
WASTEWATER DEPARTMENT

KRAUSE PS REHABILITATION

ELECTRICAL EQUIPMENT LAYOUT
(UPPER LEVEL – FLOOR ELEV. 7.54' NAVD)
(SHEET 1 OF 2)

NO.	DATE	REVISIONS

DRAWN: RWB
DESIGN: STK
QC: BEH
DATE: 05/01/14

SHEET E-6

B080-068

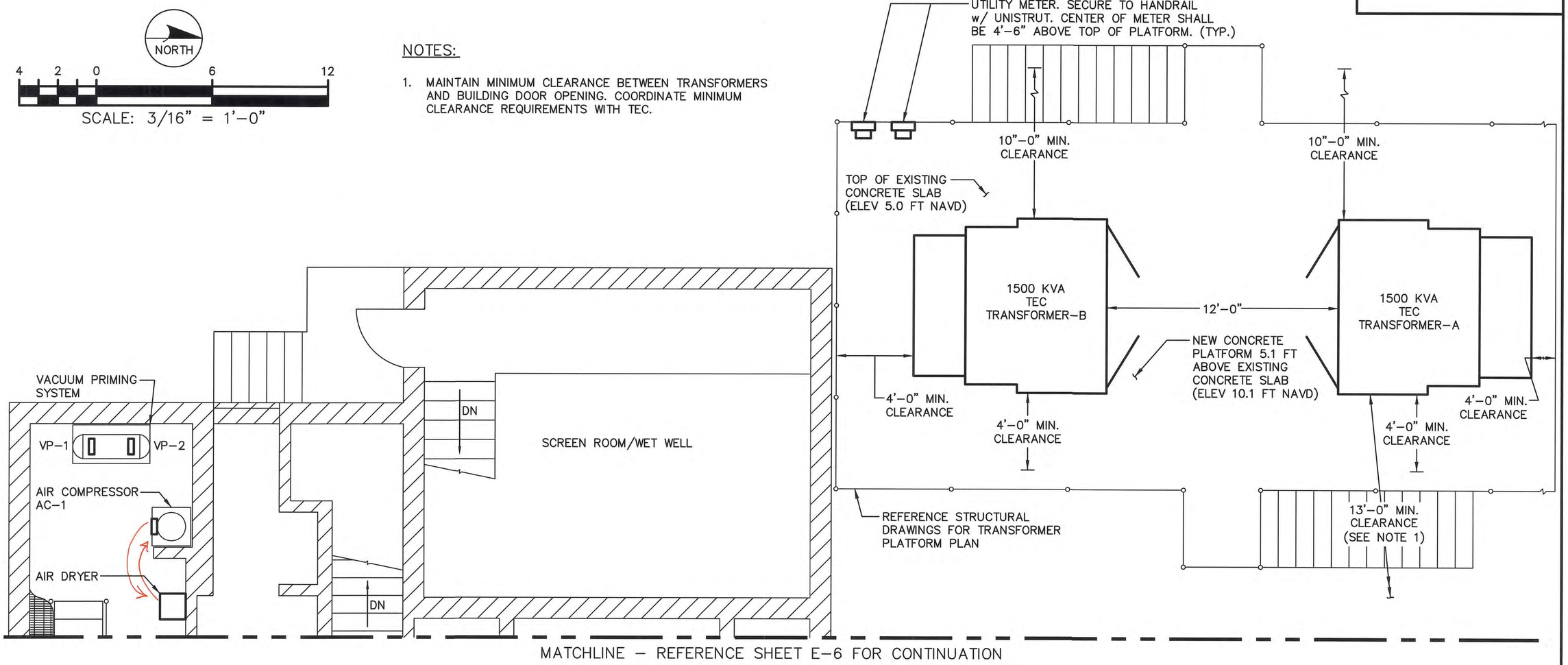

NOTES:

1. MAINTAIN MINIMUM CLEARANCE BETWEEN TRANSFORMERS AND BUILDING DOOR OPENING. COORDINATE MINIMUM CLEARANCE REQUIREMENTS WITH TEC.

ENGINEER OF RECORD:
BOB E. HALLMAN, P.E.
FLORIDA REGISTRATION NO. 20761

EDT Engineering Design Technologies Corp.
P.O. Box 152403
Tampa, FL 33684-2403
813.289.8080
813.282.9184 FAX
engineering@edt1.com
Certificate of Authorization Number: 4795

CITY of TAMPA
WASTEWATER DEPARTMENT

KRAUSE PS REHABILITATION

ELECTRICAL EQUIPMENT LAYOUT
(UPPER LEVEL - FLOOR ELEV. 7.54' NAVD)
(SHEET 2 OF 2)

NO.	DATE	REVISIONS

DRAWN: RWB
DESIGN: STK
QC: BEH
DATE: 05/01/14

SHEET E-7

B080-069

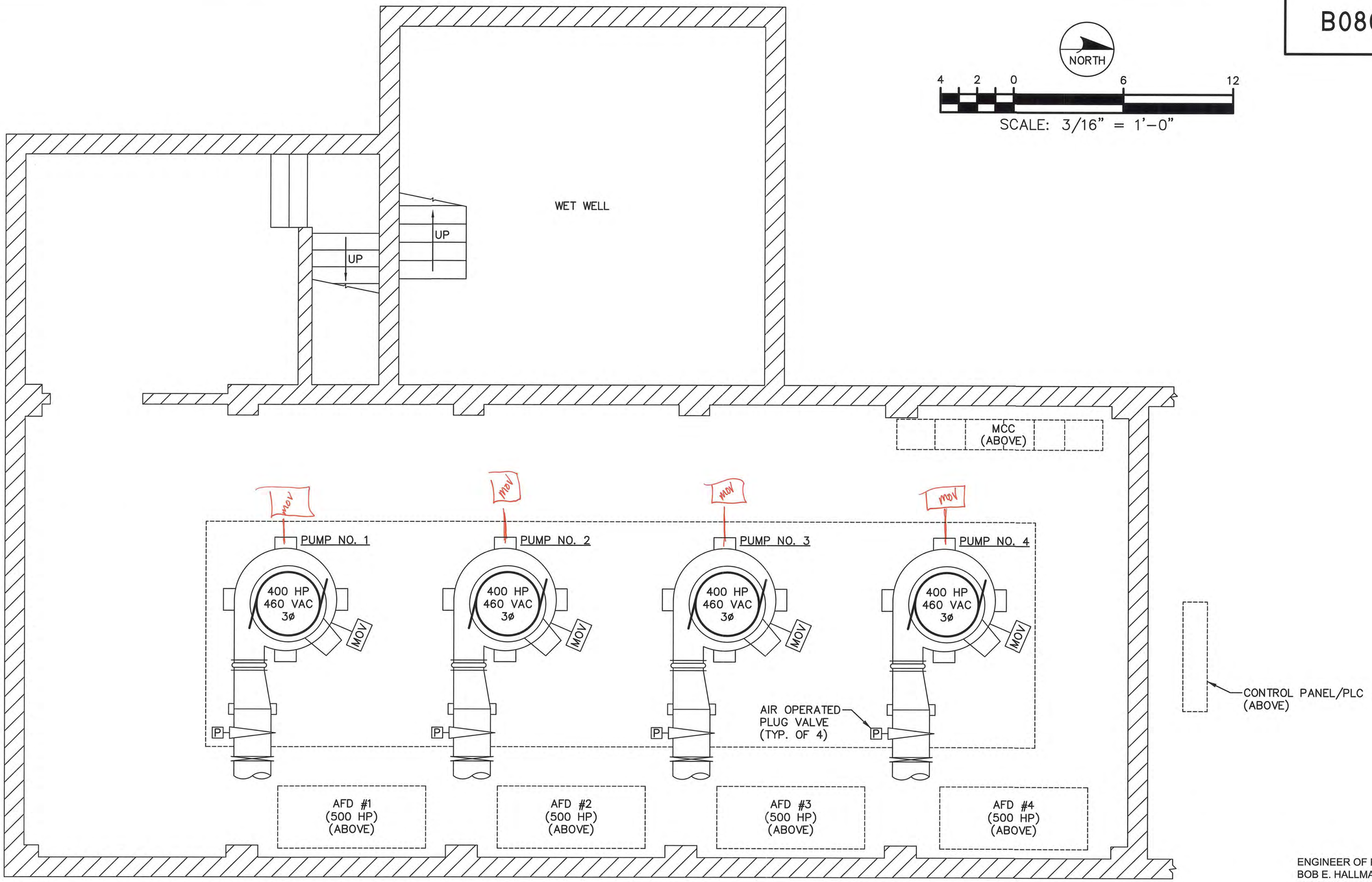

ENGINEER OF RECORD:
BOB E. HALLMAN, P.E.
FLORIDA REGISTRATION NO. 20761

Engineering Design Technologies Corp.
P.O. Box 152403
Tampa, FL 33684-2403
813.289.8080
813.282.9184 FAX
engineering@edt1.com
Certificate of Authorization Number: 4795

CITY of TAMPA
WASTEWATER DEPARTMENT

KRAUSE PS REHABILITATION

ELECTRICAL EQUIPMENT LAYOUT
(LOWER LEVEL – FLOOR ELEV. –5.99' NAVD)

NO.	DATE	REVISIONS

DRAWN: RWB
DESIGN: STK
QC: BEH
DATE: 05/01/14

SHEET E-8

B080-070

NOTES:

1. REFERENCE OVERHEAD CONDUIT SECURING DETAIL.
2. CONDUITS SHALL BE ROUTED SO AS NOT TO INTERFERE WITH THE TRAVELING BRIDGE CRANE.
3. CONDUIT ROUTING SHOWN IS DIAGRAMMATIC UNLESS OTHERWISE NOTED. CONTRACTOR SHALL OPTIMIZE THE CONDUIT ROUTING, TAKING INTO ACCOUNT THE FIELD CONDITIONS AND THE FINAL EQUIPMENT SELECTED AND APPROVED IN THE SUBMITTALS.
4. CONDUITS SHALL BE ROUTED IN LOWER LEVEL VOID BENEATH THE SWITCHBOARD PRIOR TO AREA BEING FILLED WITH CONCRETE.

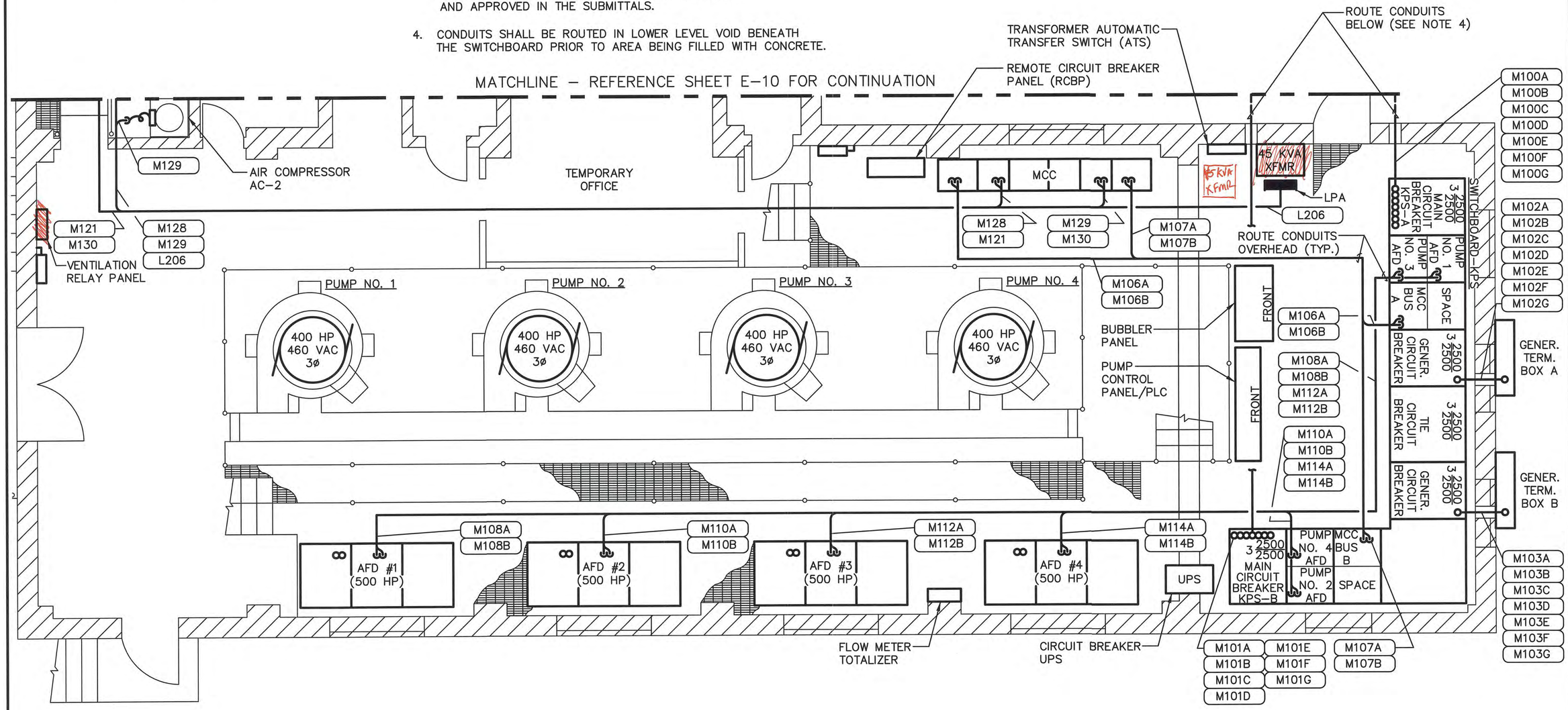

ENGINEER OF RECORD:
BOB E. HALLMAN, P.E.
FLORIDA REGISTRATION NO. 20761

Engineering Design Technologies Corp.
P.O. Box 152403
Tampa, FL 33684-2403
813.289.8080
813.282.9184 FAX
engineering@edt1.com
Certificate of Authorization Number: 4795

CITY of TAMPA
WASTEWATER DEPARTMENT

KRAUSE PS REHABILITATION

CONDUIT ROUTING PLAN – POWER
(UPPER LEVEL – FLOOR ELEV. 7.54' NAVD)
(SHEET 1 OF 2)

NO.	DATE	REVISIONS

DRAWN: RWB
DESIGN: STK
QC: BEH
DATE: 05/01/14

SHEET E-9

B080-071

NOTES:

1. REFERENCE OVERHEAD CONDUIT SECURING DETAIL.
2. CONDUITS SHALL BE ROUTED SO AS NOT TO INTERFERE WITH THE TRAVELING BRIDGE CRANE.
3. CONDUIT ROUTING SHOWN IS DIAGRAMMATIC UNLESS OTHERWISE NOTED. CONTRACTOR SHALL OPTIMIZE THE CONDUIT ROUTING, TAKING INTO ACCOUNT THE FIELD CONDITIONS AND THE FINAL EQUIPMENT SELECTED AND APPROVED IN THE SUBMITTALS.
4. CONDUITS SHALL BE ROUTED IN LOWER LEVEL VOID BENEATH THE SWITCHBOARD PRIOR TO AREA BEING FILLED WITH CONCRETE.

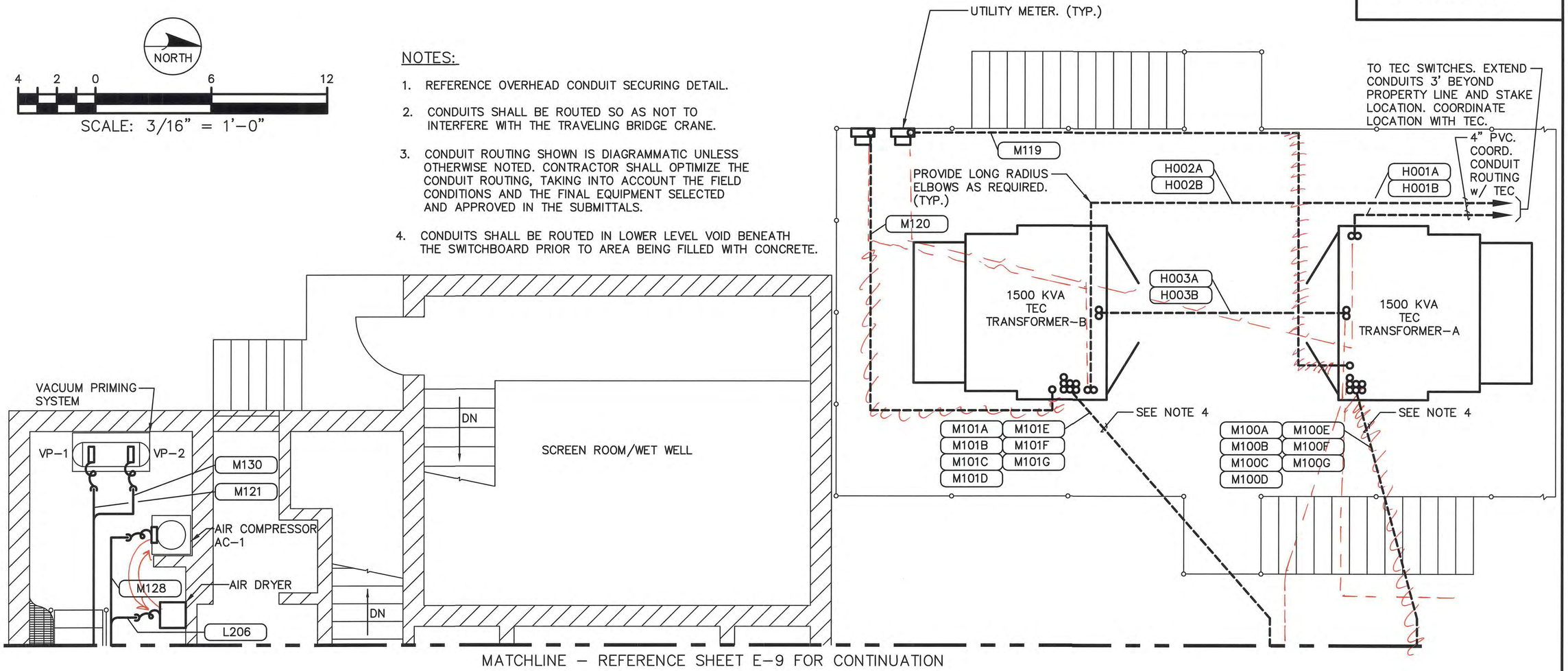

ENGINEER OF RECORD:
BOB E. HALLMAN, P.E.
FLORIDA REGISTRATION NO. 20761

Engineering Design Technologies Corp.
P.O. Box 152403
Tampa, FL 33684-2403
813.289.8080
813.282.9184 FAX
engineering@edt1.com
Certificate of Authorization Number: 4795

CITY of TAMPA
WASTEWATER DEPARTMENT

KRAUSE PS REHABILITATION

CONDUIT ROUTING PLAN - POWER
(UPPER LEVEL - FLOOR ELEV. 7.54' NAVD)
(SHEET 2 OF 2)

NO.	DATE	REVISIONS

DRAWN: RWB
DESIGN: STK
QC: BEH
DATE: 05/01/14

SHEET E-10

B080-072

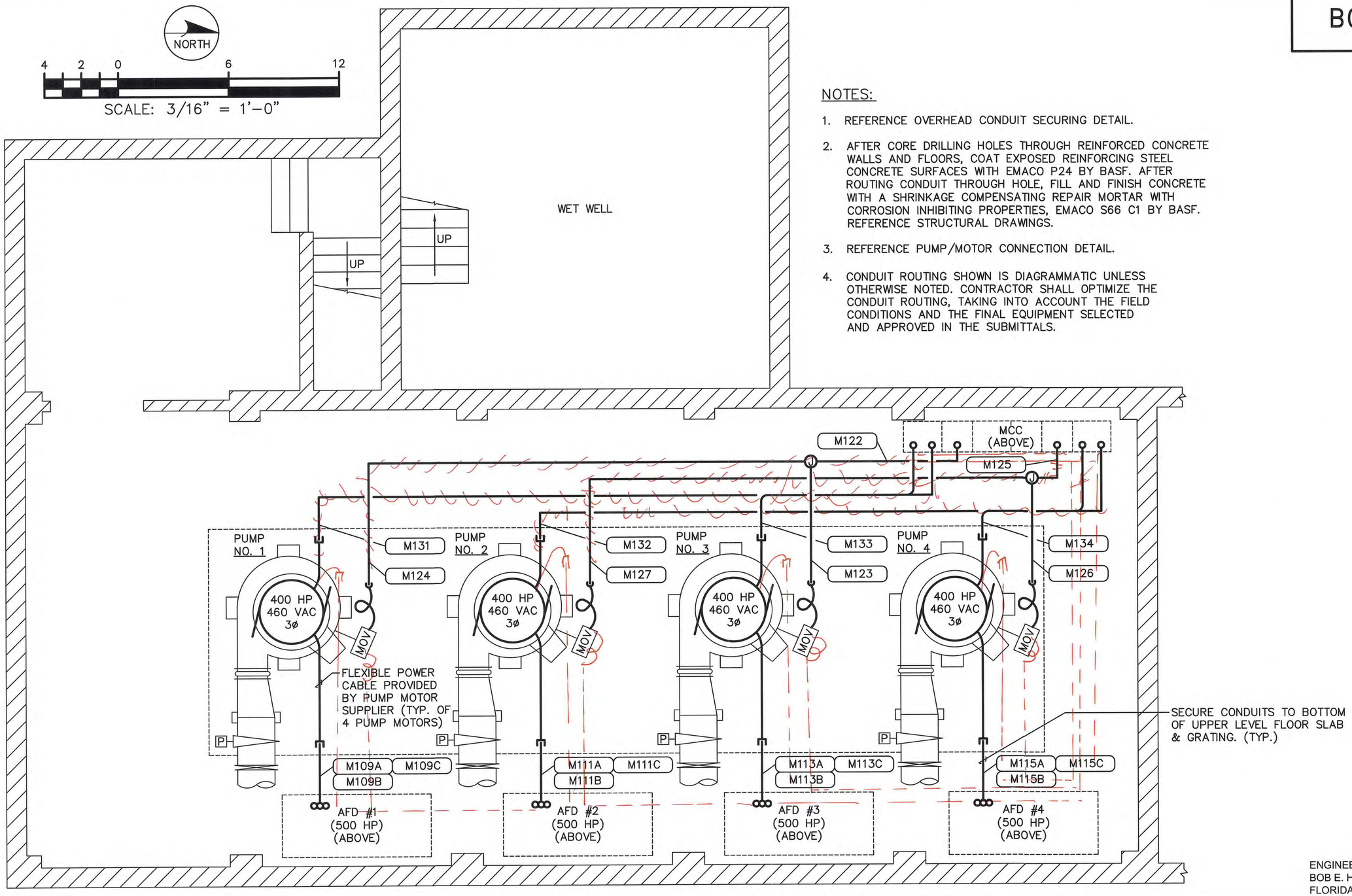

NOTES:

1. REFERENCE OVERHEAD CONDUIT SECURING DETAIL.
2. AFTER CORE DRILLING HOLES THROUGH REINFORCED CONCRETE WALLS AND FLOORS, COAT EXPOSED REINFORCING STEEL CONCRETE SURFACES WITH EMACO P24 BY BASF. AFTER ROUTING CONDUIT THROUGH HOLE, FILL AND FINISH CONCRETE WITH A SHRINKAGE COMPENSATING REPAIR MORTAR WITH CORROSION INHIBITING PROPERTIES, EMACO S66 C1 BY BASF. REFERENCE STRUCTURAL DRAWINGS.
3. REFERENCE PUMP/MOTOR CONNECTION DETAIL.
4. CONDUIT ROUTING SHOWN IS DIAGRAMMATIC UNLESS OTHERWISE NOTED. CONTRACTOR SHALL OPTIMIZE THE CONDUIT ROUTING, TAKING INTO ACCOUNT THE FIELD CONDITIONS AND THE FINAL EQUIPMENT SELECTED AND APPROVED IN THE SUBMITTALS.

ENGINEER OF RECORD:
BOB E. HALLMAN, P.E.
FLORIDA REGISTRATION NO. 20761

Engineering Design Technologies Corp.
P.O. Box 152403
Tampa, FL 33684-2403
813.289.8080
813.282.9184 FAX
engineering@edt1.com
Certificate of Authorization Number: 4795

CITY of TAMPA
WASTEWATER DEPARTMENT

KRAUSE PS REHABILITATION

CONDUIT ROUTING PLAN – POWER
(LOWER LEVEL – FLOOR ELEV. –5.99' NAVD)

NO.	DATE	REVISIONS

DRAWN: RWB
DESIGN: STK
QC: BEH
DATE: 05/01/14

SHEET E-11

B080-073

NORTH

4 2 0 6 12

SCALE: 3/16" = 1'-0"

NOTES:

1. REFERENCE OVERHEAD CONDUIT SECURING DETAIL.
2. CONDUITS SHALL BE ROUTED SO AS NOT TO INTERFERE WITH THE TRAVELING BRIDGE CRANE.
3. CONDUIT ROUTING SHOWN IS DIAGRAMMATIC UNLESS OTHERWISE NOTED. CONTRACTOR SHALL OPTIMIZE THE CONDUIT ROUTING, TAKING INTO ACCOUNT THE FIELD CONDITIONS AND THE FINAL EQUIPMENT SELECTED AND APPROVED IN THE SUBMITTALS.

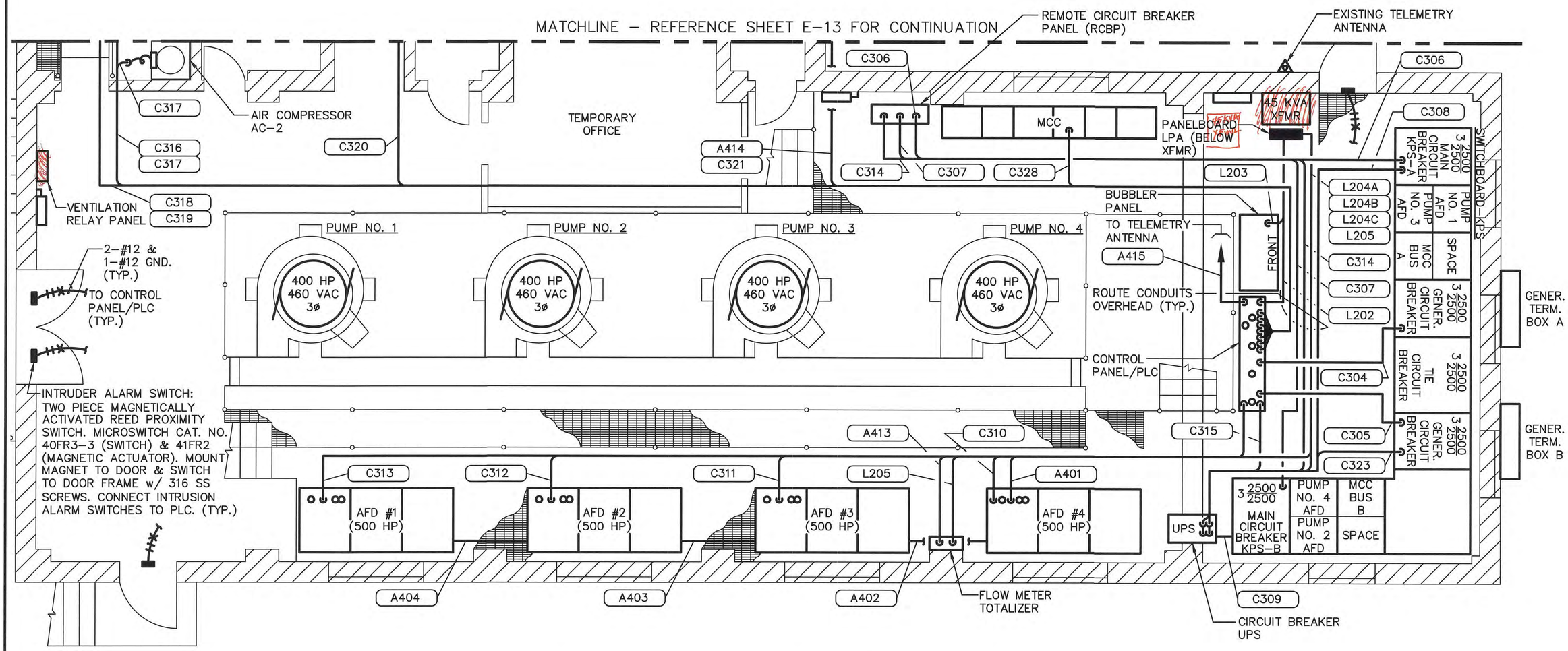

ENGINEER OF RECORD:
BOB E. HALLMAN, P.E.
FLORIDA REGISTRATION NO. 20761

EDT
Engineering Design Technologies Corp.
P.O. Box 152403
Tampa, FL 33684-2403
813.289.8080
813.282.9184 FAX
engineering@edt1.com
Certificate of Authorization Number: 4795

CITY of TAMPA
WASTEWATER DEPARTMENT

KRAUSE PS REHABILITATION

CONDUIT ROUTING PLAN – CONTROLS
(UPPER LEVEL – FLOOR ELEV. 7.54' NAVD)
(SHEET 1 OF 2)

NO.	DATE	REVISIONS

DRAWN: RWB
DESIGN: STK
QC: BEH
DATE: 05/01/14

SHEET E-12

B080-074

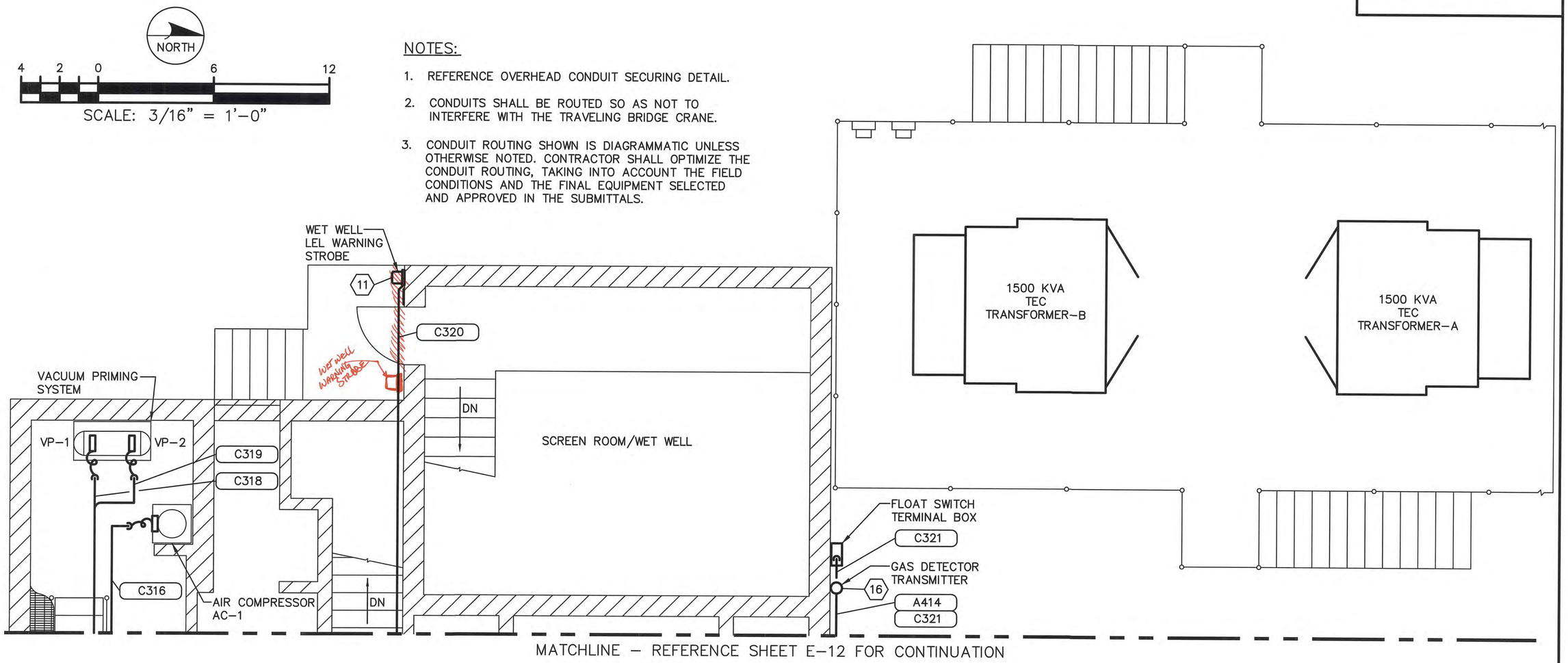

NOTES:

1. REFERENCE OVERHEAD CONDUIT SECURING DETAIL.
2. CONDUITS SHALL BE ROUTED SO AS NOT TO INTERFERE WITH THE TRAVELING BRIDGE CRANE.
3. CONDUIT ROUTING SHOWN IS DIAGRAMMATIC UNLESS OTHERWISE NOTED. CONTRACTOR SHALL OPTIMIZE THE CONDUIT ROUTING, TAKING INTO ACCOUNT THE FIELD CONDITIONS AND THE FINAL EQUIPMENT SELECTED AND APPROVED IN THE SUBMITTALS.

SEE KEYED NOTES ON SHEET E-23

ENGINEER OF RECORD:
BOB E. HALLMAN, P.E.
FLORIDA REGISTRATION NO. 20761

Engineering Design Technologies Corp.
P.O. Box 152403
Tampa, FL 33684-2403
813.289.8080
813.282.9184 FAX
engineering@edt1.com
Certificate of Authorization Number: 4795

CITY of TAMPA
WASTEWATER DEPARTMENT

KRAUSE PS REHABILITATION

CONDUIT ROUTING PLAN – CONTROLS
(UPPER LEVEL – FLOOR ELEV. 7.54' NAVD)
(SHEET 2 OF 2)

NO.	DATE	REVISIONS

DRAWN: RWB
DESIGN: STK
QC: BEH
DATE: 05/01/14

SHEET E-13

B080-075

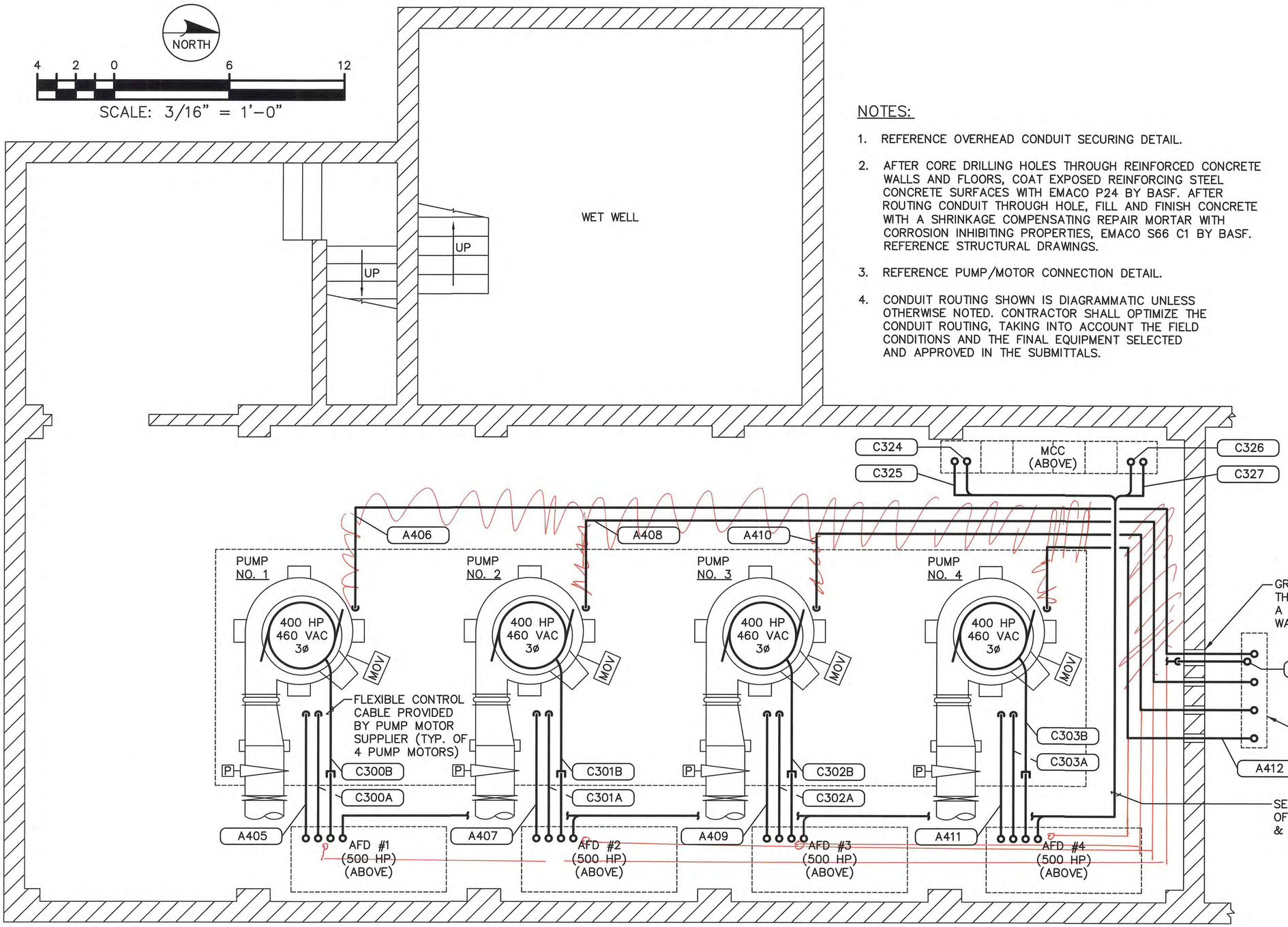

NOTES:

1. REFERENCE OVERHEAD CONDUIT SECURING DETAIL.
2. AFTER CORE DRILLING HOLES THROUGH REINFORCED CONCRETE WALLS AND FLOORS, COAT EXPOSED REINFORCING STEEL CONCRETE SURFACES WITH EMACO P24 BY BASF. AFTER ROUTING CONDUIT THROUGH HOLE, FILL AND FINISH CONCRETE WITH A SHRINKAGE COMPENSATING REPAIR MORTAR WITH CORROSION INHIBITING PROPERTIES, EMACO S66 C1 BY BASF. REFERENCE STRUCTURAL DRAWINGS.
3. REFERENCE PUMP/MOTOR CONNECTION DETAIL.
4. CONDUIT ROUTING SHOWN IS DIAGRAMMATIC UNLESS OTHERWISE NOTED. CONTRACTOR SHALL OPTIMIZE THE CONDUIT ROUTING, TAKING INTO ACCOUNT THE FIELD CONDITIONS AND THE FINAL EQUIPMENT SELECTED AND APPROVED IN THE SUBMITTALS.

ENGINEER OF RECORD:
BOB E. HALLMAN, P.E.
FLORIDA REGISTRATION NO. 20761

EDT
Engineering Design Technologies Corp.
P.O. Box 152403
Tampa, FL 33684-2403
813.289.8080
813.282.9184 FAX
engineering@edt1.com
Certificate of Authorization Number: 4795

CITY of TAMPA
WASTEWATER DEPARTMENT

KRAUSE PS REHABILITATION

CONDUIT ROUTING PLAN – CONTROLS
(LOWER LEVEL – FLOOR ELEV. –5.99' NAVD)

NO.	DATE	REVISIONS

DRAWN: RWB
DESIGN: STK
QC: BEH
DATE: 05/01/14

SHEET E-14

B080-076

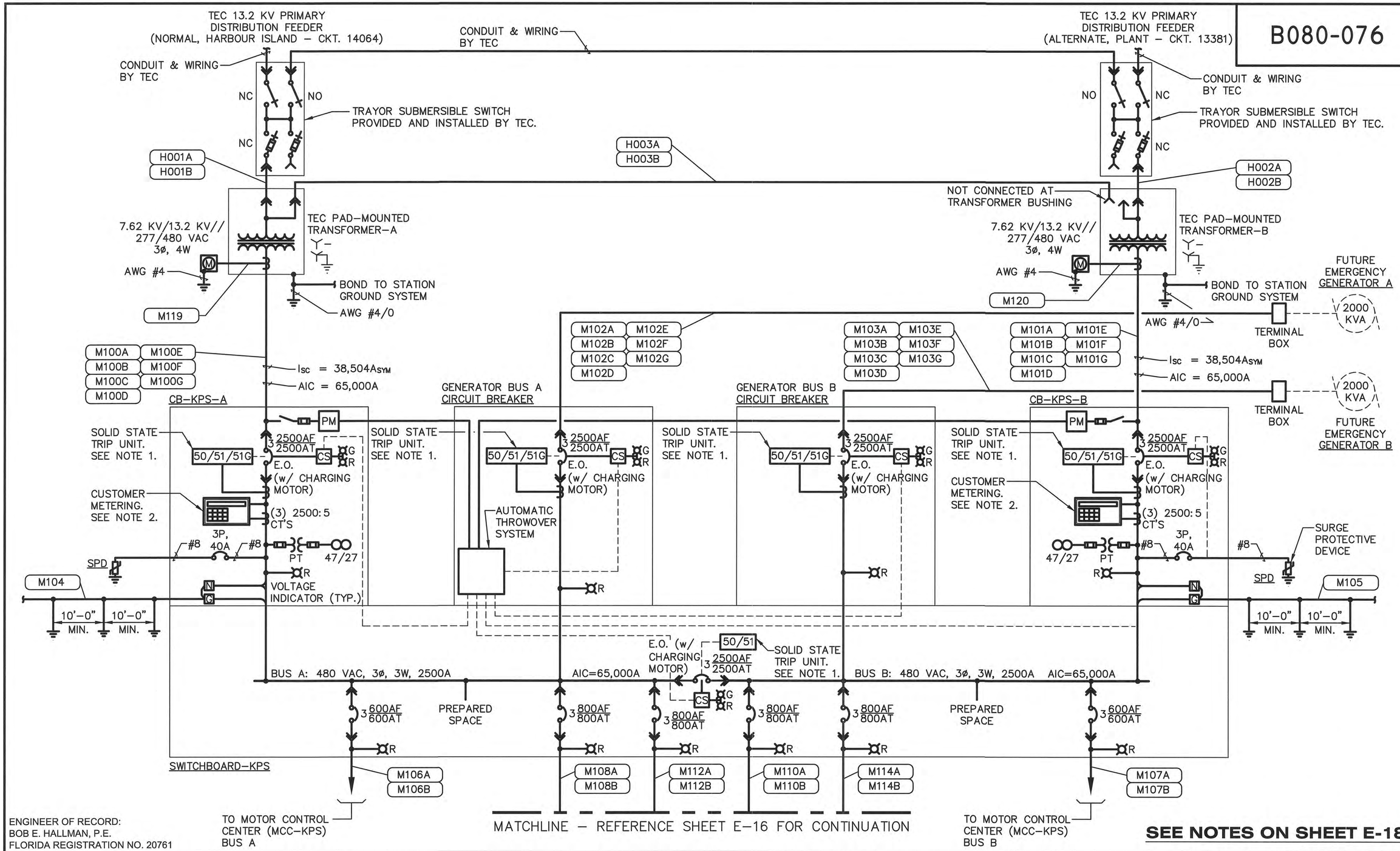

ENGINEER OF RECORD:
BOB E. HALLMAN, P.E.
FLORIDA REGISTRATION NO. 20761

SEE NOTES ON SHEET E-18

EDT
Engineering Design Technologies Corp.
P.O. Box 152403
Tampa, FL 33684-2403
813.289.8080
813.282.9184 FAX
engineering@edt1.com
Certificate of Authorization Number: 4795

CITY of TAMPA
WASTEWATER DEPARTMENT

KRAUSE PS REHABILITATION

SWITCHBOARD–KPS
ELECTRICAL ONE–LINE DIAGRAM
(SHEET 1 OF 2)

NO.	DATE	REVISIONS

DRAWN: RWB
DESIGN: STK
QC: BEH
DATE: 05/01/14

SHEET E-15

B080-077

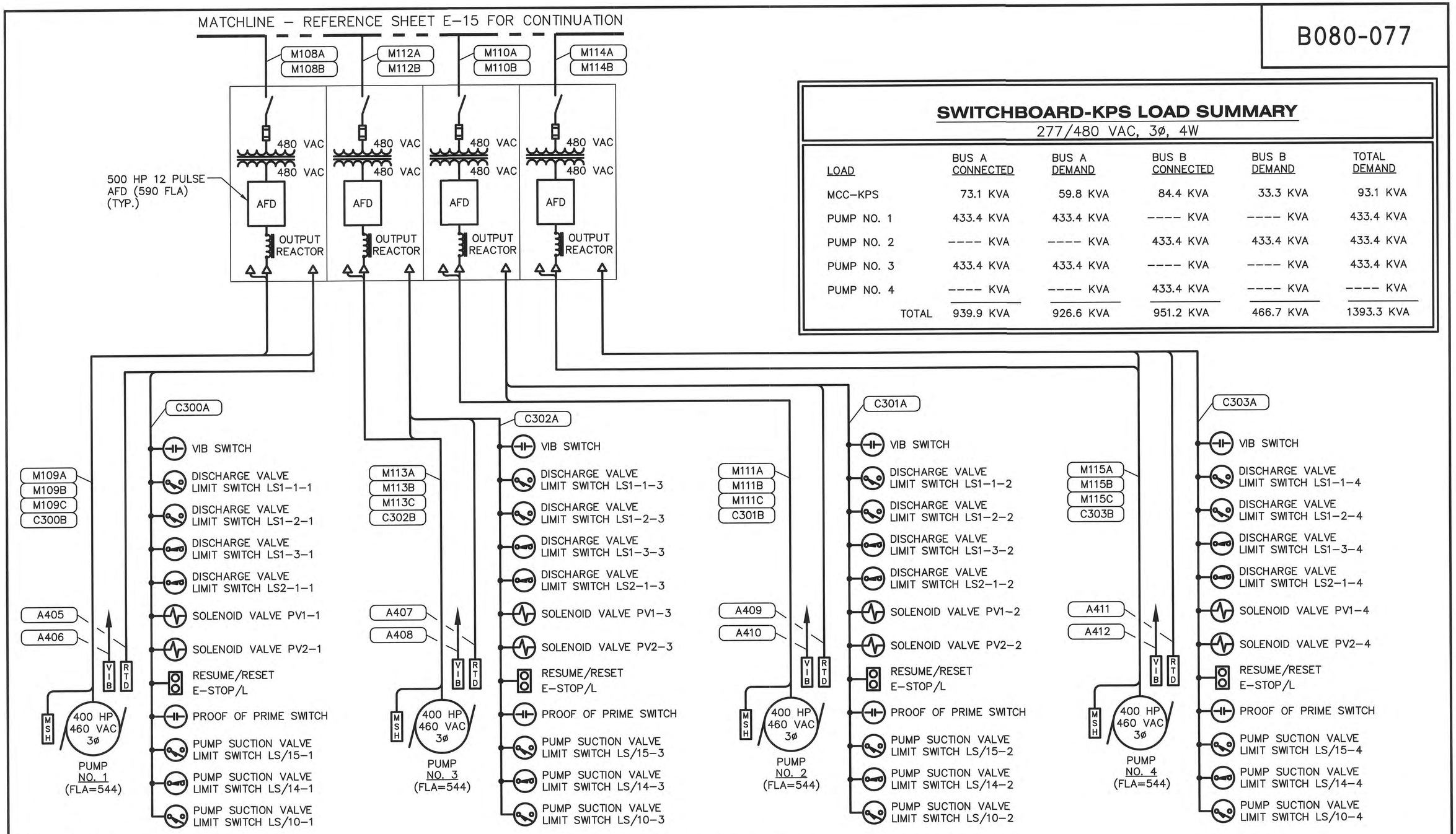

SWITCHBOARD-KPS LOAD SUMMARY

277/480 VAC, 3ø, 4W

LOAD	BUS A CONNECTED	BUS A DEMAND	BUS B CONNECTED	BUS B DEMAND	TOTAL DEMAND
MCC-KPS	73.1 KVA	59.8 KVA	84.4 KVA	33.3 KVA	93.1 KVA
PUMP NO. 1	433.4 KVA	433.4 KVA	---- KVA	---- KVA	433.4 KVA
PUMP NO. 2	---- KVA	---- KVA	433.4 KVA	433.4 KVA	433.4 KVA
PUMP NO. 3	433.4 KVA	433.4 KVA	---- KVA	---- KVA	433.4 KVA
PUMP NO. 4	---- KVA	---- KVA	433.4 KVA	---- KVA	---- KVA
TOTAL	939.9 KVA	926.6 KVA	951.2 KVA	466.7 KVA	1393.3 KVA

ELECTRICAL ONE-LINE DIAGRAM

ENGINEER OF RECORD:
BOB E. HALLMAN, P.E.
FLORIDA REGISTRATION NO. 20761

Engineering Design Technologies Corp.
P.O. Box 152403
Tampa, FL 33684-2403
813.289.8080
813.282.9184 FAX
engineering@edt1.com
Certificate of Authorization Number: 4795

CITY of TAMPA
WASTEWATER DEPARTMENT

KRAUSE PS REHABILITATION

SWITCHBOARD-KPS
ELECTRICAL ONE-LINE DIAGRAM
(SHEET 2 OF 2)

NO.	DATE	REVISIONS

DRAWN: RWB
DESIGN: STK
QC: BEH
DATE: 05/01/14

SHEET E-16

B080-078

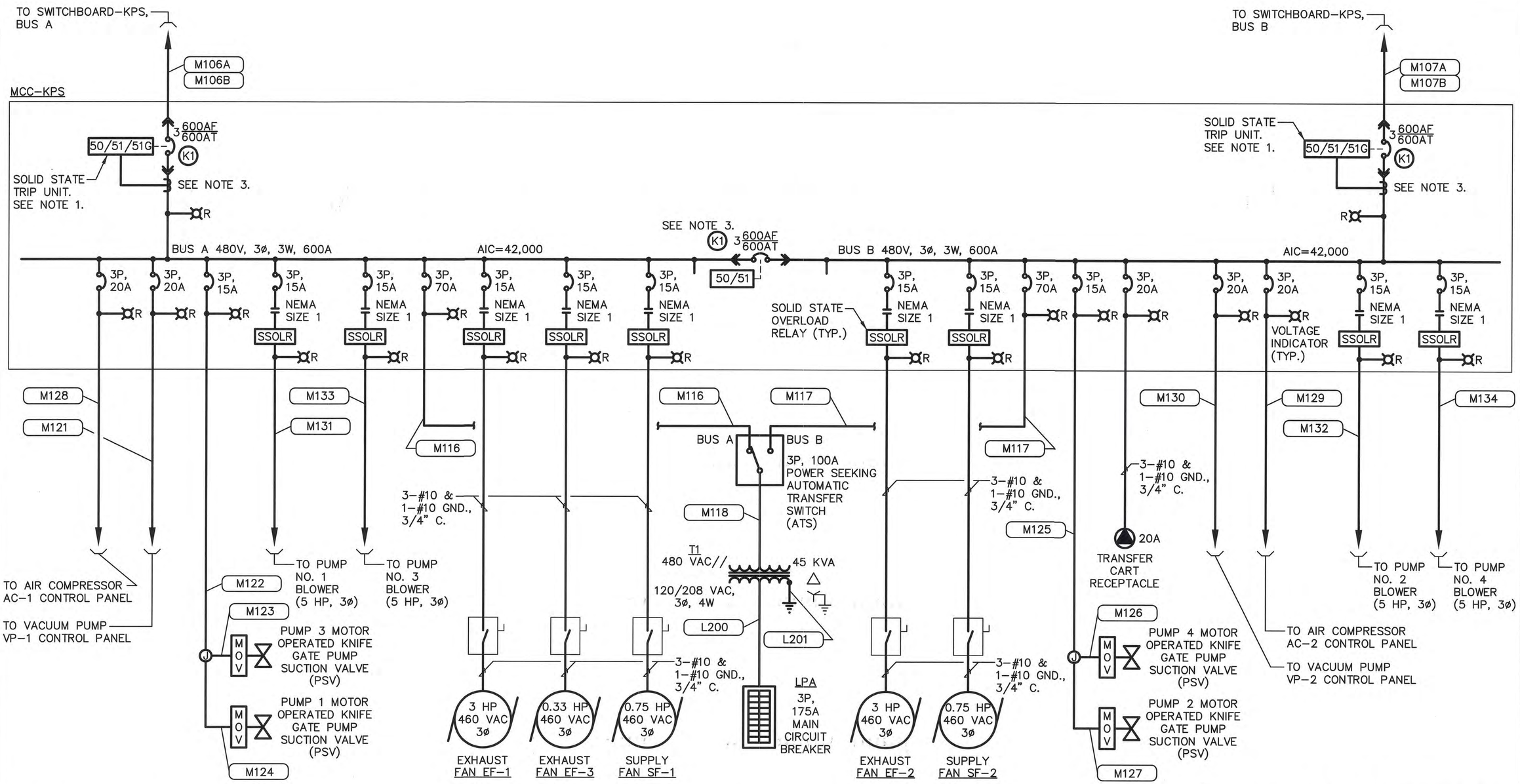

ENGINEER OF RECORD:
BOB E. HALLMAN, P.E.
FLORIDA REGISTRATION NO. 20761

MCC-KPS ELECTRICAL ONE-LINE DIAGRAM

SEE NOTES ON SHEET E-18

EDT
Engineering Design Technologies Corp.
P.O. Box 152403
Tampa, FL 33684-2403
813.289.8080
813.282.9184 FAX
engineering@edt1.com
Certificate of Authorization Number: 4795

CITY of TAMPA
WASTEWATER DEPARTMENT

KRAUSE PS REHABILITATION

MCC-KPS ELECTRICAL ONE-LINE DIAGRAM (SHEET 1 OF 2)

NO.	DATE	REVISIONS

DRAWN: RWB
DESIGN: STK
QC: BEH
DATE: 06/03/14

SHEET E-17

B080-079

MCC-KPS LOAD SUMMARY

277/480 VAC, 3ø, 4W

LOAD	BUS A CONNECTED	BUS A DEMAND	BUS B CONNECTED	BUS B DEMAND	TOTAL DEMAND
TRANSFORMER T1	45.0 KVA	31.7 KVA	45.0 KVA	---- KVA	31.7 KVA
AIR COMPRESSOR AC-1 CONTROL PANEL	6.1 KVA	6.1 KVA	---- KVA	---- KVA	6.1 KVA
AIR COMPRESSOR AC-2 CONTROL PANEL	---- KVA	---- KVA	6.1 KVA	6.1 KVA	6.1 KVA
VACUUM PUMP VP-1 CONTROL PANEL	1.5 KVA	1.5 KVA	---- KVA	---- KVA	1.5 KVA
VACUUM PUMP VP-2 CONTROL PANEL	---- KVA	---- KVA	1.5 KVA	1.5 KVA	1.5 KVA
PUMP 3 & PUMP 1 MOTOR OPERATED KNIFE GATE PUMP SUCTION VALVE (PSV)	1.5 KVA	1.5 KVA	---- KVA	---- KVA	1.5 KVA
PUMP 4 & PUMP 2 MOTOR OPERATED KNIFE GATE PUMP SUCTION VALVE (PSV)	---- KVA	---- KVA	1.5 KVA	1.5 KVA	1.5 KVA
EXHAUST FAN EF-1	3.8 KVA	3.8 KVA	---- KVA	---- KVA	3.8 KVA
EXHAUST FAN EF-2	---- KVA	---- KVA	3.8 KVA	3.8 KVA	3.8 KVA
EXHAUST FAN EF-3	1.5 KVA	1.5 KVA	---- KVA	---- KVA	1.5 KVA
SUPPLY FAN SF-1	1.5 KVA	1.5 KVA	---- KVA	---- KVA	1.5 KVA
SUPPLY FAN SF-2	---- KVA	---- KVA	1.5 KVA	1.5 KVA	1.5 KVA
PUMP NO. 1 BLOWER	6.1 KVA	6.1 KVA	---- KVA	---- KVA	6.1 KVA
PUMP NO. 2 BLOWER	---- KVA	---- KVA	6.1 KVA	6.1 KVA	6.1 KVA
PUMP NO. 3 BLOWER	6.1 KVA	6.1 KVA	---- KVA	---- KVA	6.1 KVA
PUMP NO. 4 BLOWER	---- KVA	---- KVA	6.1 KVA	---- KVA	---- KVA
TRANSFER CART RECEPTACLE	---- KVA	---- KVA	12.8 KVA	12.8 KVA	12.8 KVA
TOTAL	73.1 KVA	59.8 KVA	84.4 KVA	33.3 KVA	93.1 KVA

NOTES:

1. THE SOLID STATE TRIP UNIT SHALL PROVIDE THE FOLLOWING CURRENT SENSING & TRIP FUNCTIONS:
   - LONG TIME PICK-UP & DELAY
   - SHORT TIME PICK-UP & DELAY
   - INSTANTANEOUS PICK-UP
   - GROUND FAULT PICK-UP & DELAY
2. CUSTOMER METERING SHALL PROVIDE AS A MINIMUM THE READINGS FOR:
   - VOLTAGE (V)
   - AMPERAGE (A)
   - POWER FACTOR (PF)
   - KILOWATT USAGE (KW)
   - KILOWATT DEMAND (KWD)
   - WATTS (W)
   - VARS (VR)
   - VAR DEMAND (VRD)
   - VAR HOURS (VRH)
   - FREQUENCY (FRQ)
   - THD CURRENT (THC)
   - THD VOLTAGE (THV)
3. CONTRACTOR SHALL INSTALL KIRK KEY INTERLOCKS ON THE TWO (2) MAIN CIRCUIT BREAKERS AND ON THE TIE BREAKER IN MCC-KPS. THE KIRK KEY INTERLOCKS SHOWN AS K1 ON THE MAIN CIRCUIT BREAKERS SHALL BE KEYED THE SAME AS THE KIRK KEY INTERLOCK ON THE TIE BREAKER. EACH KIRK KEY LOCK SHALL BE CONFIGURED IN A L-O-R LOCKING POSITION (DEVICE LOCKED OPEN WITH KEY REMOVED) PROVIDE (2) KEYS ONLY.

ENGINEER OF RECORD:
BOB E. HALLMAN, P.E.
FLORIDA REGISTRATION NO. 20761

EDT
Engineering Design Technologies Corp.
P.O. Box 152403
Tampa, FL 33684-2403
813.289.8080
813.282.9184 FAX
engineering@edt1.com
Certificate of Authorization Number: 4795

CITY of TAMPA
WASTEWATER DEPARTMENT

KRAUSE PS REHABILITATION

MCC-KPS ELECTRICAL ONE-LINE DIAGRAM (SHEET 2 OF 2)

NO.	DATE	REVISIONS

DRAWN: RWB
DESIGN: STK
QC: BEH
DATE: 05/01/14

SHEET E-18

B080-080

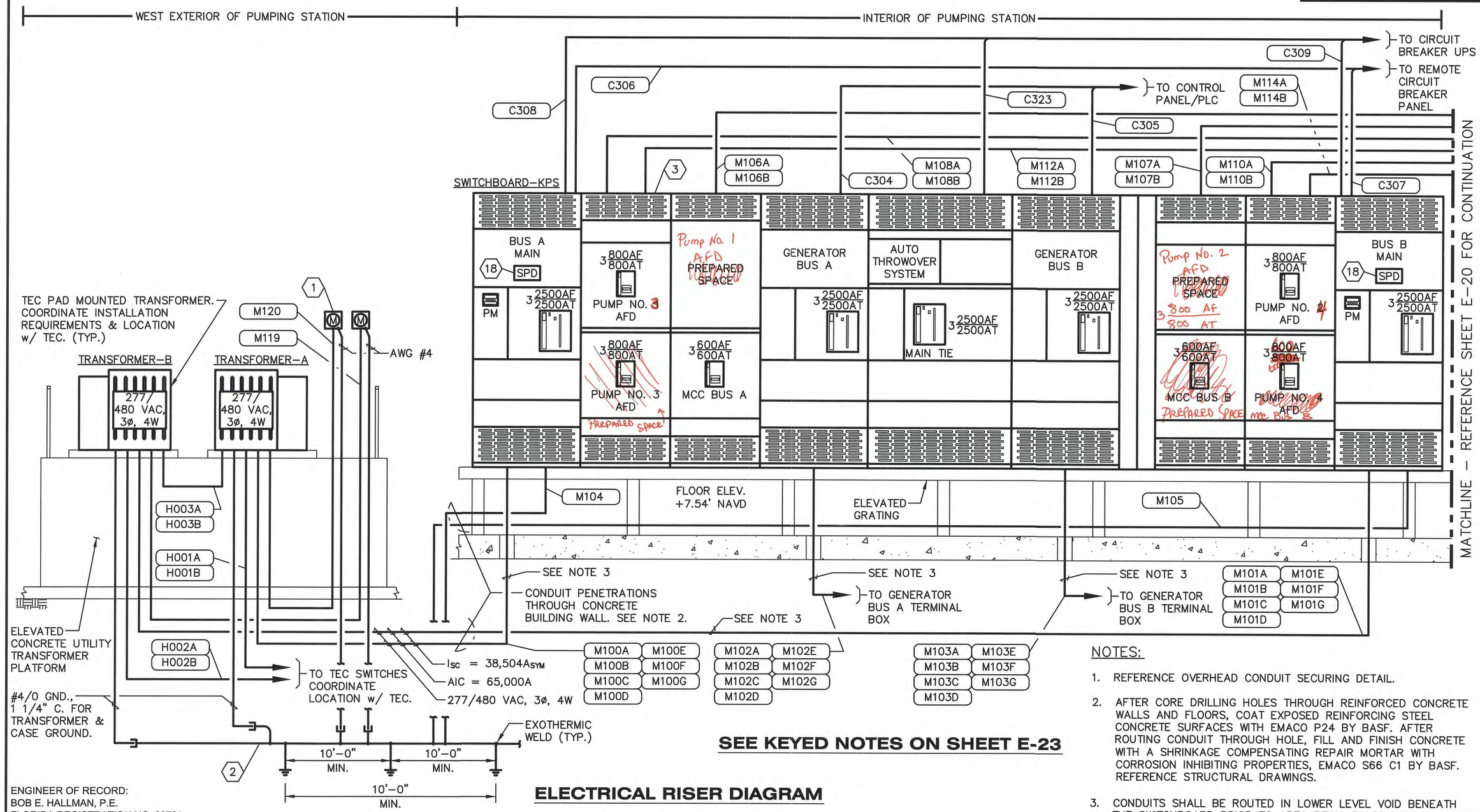

SEE KEYED NOTES ON SHEET E-23

ELECTRICAL RISER DIAGRAM

NOTES:

1. REFERENCE OVERHEAD CONDUIT SECURING DETAIL.
2. AFTER CORE DRILLING HOLES THROUGH REINFORCED CONCRETE WALLS AND FLOORS, COAT EXPOSED REINFORCING STEEL CONCRETE SURFACES WITH EMACO P24 BY BASF. AFTER ROUTING CONDUIT THROUGH HOLE, FILL AND FINISH CONCRETE WITH A SHRINKAGE COMPENSATING REPAIR MORTAR WITH CORROSION INHIBITING PROPERTIES, EMACO S66 C1 BY BASF. REFERENCE STRUCTURAL DRAWINGS.
3. CONDUITS SHALL BE ROUTED IN LOWER LEVEL VOID BENEATH THE SWITCHBOARD PRIOR TO AREA BEING FILLED WITH CONCRETE.

ENGINEER OF RECORD:
BOB E. HALLMAN, P.E.
FLORIDA REGISTRATION NO. 20761

Engineering Design Technologies Corp.
P.O. Box 152403
Tampa, FL 33684-2403
813.289.8080
813.282.9184 FAX
engineering@edt1.com
Certificate of Authorization Number: 4795

CITY of TAMPA
WASTEWATER DEPARTMENT

KRAUSE PS REHABILITATION

ELECTRICAL RISER DIAGRAM
(SHEET 1 OF 4)

NO.	DATE	REVISIONS

DRAWN: RWB
DESIGN: STK
QC: BEH
DATE: 05/01/14

SHEET E-19

B080-081

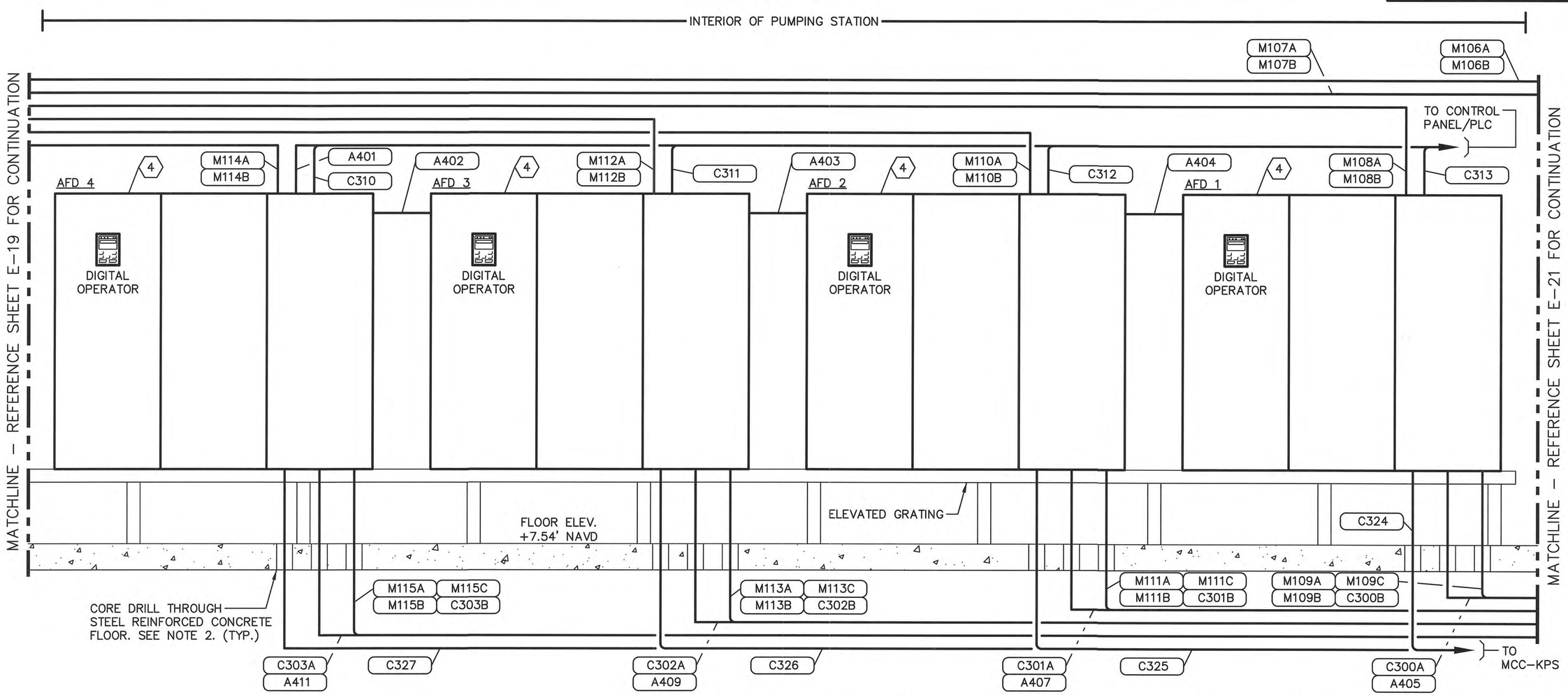

ELECTRICAL RISER DIAGRAM

SEE KEYED NOTES ON SHEET E-23

NOTES:

1. REFERENCE OVERHEAD CONDUIT SECURING DETAIL.
2. AFTER CORE DRILLING HOLES THROUGH REINFORCED CONCRETE WALLS AND FLOORS, COAT EXPOSED REINFORCING STEEL CONCRETE SURFACES WITH EMACO P24 BY BASF. AFTER ROUTING CONDUIT THROUGH HOLE, FILL AND FINISH CONCRETE WITH A SHRINKAGE COMPENSATING REPAIR MORTAR WITH CORROSION INHIBITING PROPERTIES, EMACO S66 C1 BY BASF. REFERENCE STRUCTURAL DRAWINGS.

ENGINEER OF RECORD:
BOB E. HALLMAN, P.E.
FLORIDA REGISTRATION NO. 20761

Engineering Design Technologies Corp.
P.O. Box 152403
Tampa, FL 33684-2403
813.289.8080
813.282.9184 FAX
engineering@edt1.com
Certificate of Authorization Number: 4795

CITY of TAMPA
WASTEWATER DEPARTMENT

KRAUSE PS REHABILITATION

ELECTRICAL RISER DIAGRAM
(SHEET 2 OF 4)

NO.	DATE	REVISIONS

DRAWN: RWB
DESIGN: STK
QC: BEH
DATE: 05/01/14

SHEET E-20

B080-082

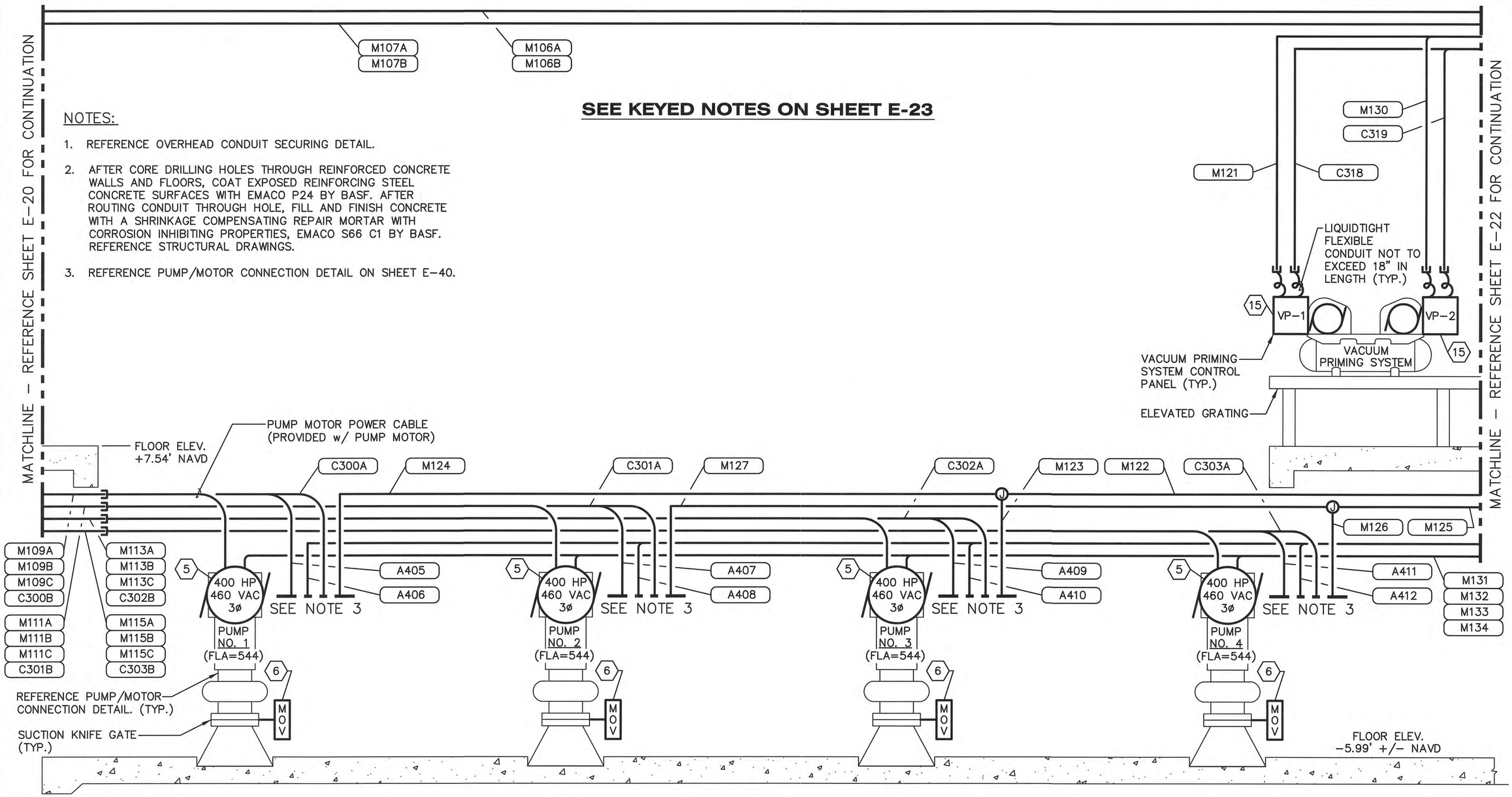

NOTES:

1. REFERENCE OVERHEAD CONDUIT SECURING DETAIL.
2. AFTER CORE DRILLING HOLES THROUGH REINFORCED CONCRETE WALLS AND FLOORS, COAT EXPOSED REINFORCING STEEL CONCRETE SURFACES WITH EMACO P24 BY BASF. AFTER ROUTING CONDUIT THROUGH HOLE, FILL AND FINISH CONCRETE WITH A SHRINKAGE COMPENSATING REPAIR MORTAR WITH CORROSION INHIBITING PROPERTIES, EMACO S66 C1 BY BASF. REFERENCE STRUCTURAL DRAWINGS.
3. REFERENCE PUMP/MOTOR CONNECTION DETAIL ON SHEET E-40.

ELECTRICAL RISER DIAGRAM

ENGINEER OF RECORD:
BOB E. HALLMAN, P.E.
FLORIDA REGISTRATION NO. 20761

EDT
Engineering Design Technologies Corp.
P.O. Box 152403
Tampa, FL 33684-2403
813.289.8080
813.282.9184 FAX
engineering@edt1.com
Certificate of Authorization Number: 4795

CITY of TAMPA
WASTEWATER DEPARTMENT

KRAUSE PS REHABILITATION

ELECTRICAL RISER DIAGRAM
(SHEET 3 OF 4)

NO.	DATE	REVISIONS

DRAWN: RWB
DESIGN: STK
QC: BEH
DATE: 05/01/14

SHEET E-21

B080-083

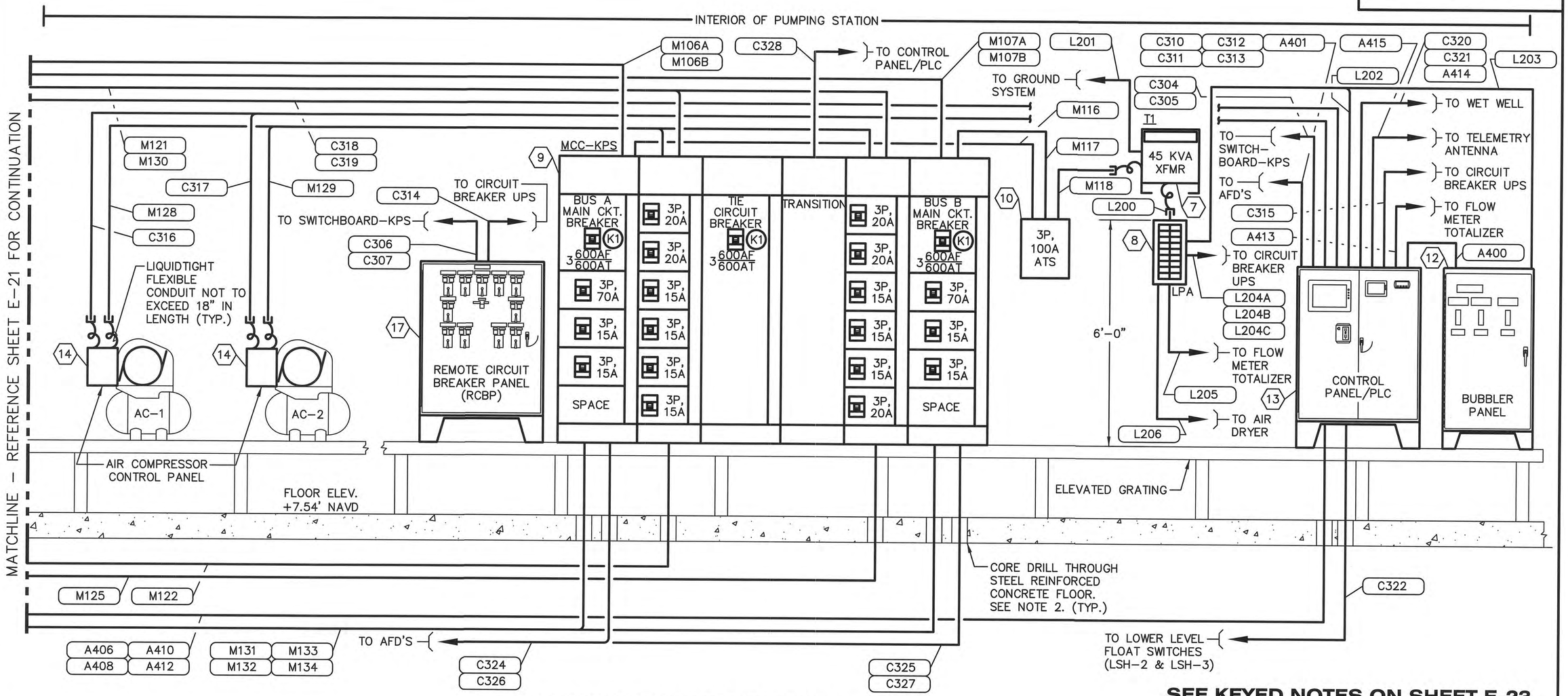

ELECTRICAL RISER DIAGRAM

SEE KEYED NOTES ON SHEET E-23

NOTES:

1. REFERENCE OVERHEAD CONDUIT SECURING DETAIL.
2. AFTER CORE DRILLING HOLES THROUGH REINFORCED CONCRETE WALLS AND FLOORS, COAT EXPOSED REINFORCING STEEL CONCRETE SURFACES WITH EMACO P24 BY BASF. AFTER ROUTING CONDUIT THROUGH HOLE, FILL AND FINISH CONCRETE WITH A SHRINKAGE COMPENSATING REPAIR MORTAR WITH CORROSION INHIBITING PROPERTIES, EMACO S66 C1 BY BASF. REFERENCE STRUCTURAL DRAWINGS.

ENGINEER OF RECORD:
BOB E. HALLMAN, P.E.
FLORIDA REGISTRATION NO. 20761

EDT
Engineering Design Technologies Corp.
P.O. Box 152403
Tampa, FL 33684-2403
813.289.8080
813.282.9184 FAX
engineering@edt1.com
Certificate of Authorization Number: 4795

CITY of TAMPA
WASTEWATER DEPARTMENT

KRAUSE PS REHABILITATION

ELECTRICAL RISER DIAGRAM (SHEET 4 OF 4)

NO.	DATE	REVISIONS

DRAWN: RWB
DESIGN: STK
QC: BEH
DATE: 05/01/14

SHEET E-22

B080-084

KEYED NOTES:

1. TRANSFORMER RATED METER SOCKET PROVIDED & INSTALLED BY CONTRACTOR. CENTER METER 4'–6" ABOVE TOP OF PLATFORM. COORD. REQUIREMENTS WITH TEC.

2. GROUND SYSTEM – MIN. (3) 3/4" DIA. x 10'–0" STAINLESS STEEL GND. RODS, MIN. 10'–0" APART, MIN. 10'–0" LENGTH STEEL PIPING (ATTACH w/ GROUNDING CLAMPS) & GROUNDING ELECTRODE AT THE BOTTOM OF CONCRETE UTILITY TRANSFORMER PLATFORM (ATTACH w/ EXOTHERMIC WELD). BOND TO EXISTING SERVICE GROUND SYSTEM w/ #4/0 BARE COPPER GROUND CONDUCTOR (ATTACH w/ EXOTHERMIC WELD). REFERENCE GROUND WELL DETAIL.

3. SWITCHBOARD–KPS w/ 2500AF/2500AT 100% RATED MAIN CIRCUIT BREAKERS, 100% RATED TIE CIRCUIT BREAKER, AUTO THROWOVER SYSTEM AND DISTRIBUTION SECTIONS. REFERENCE SPECIFICATIONS.

4. YASKAWA 500 HP, 590 FLA, 12–PULSE ADJUSTABLE FREQUENCY DRIVE (AFD) w/ OUTPUT REACTOR, DIGITAL OPERATOR & INTEGRAL DISCONNECT. REFERENCE SPECIFICATIONS.

5. IMMERSIBLE PUMP MOTOR: 400 HP, 460 VAC, 3ø, 544 FLA. PUMP MOTOR SHALL INCLUDE A MOTOR SPACE HEATER (MSH), RESISTANCE TEMPERATURE DETECTORS (RTD) AND VIBRATION SENSORS. REFERENCE PUMP/MOTOR CONNECTION DETAIL.

6. MOTOR OPERATED VALVE (MOV): 3ø, 460 VAC, LIMITORQUE MX20 SERIES. REFERENCE MECHANICAL DRAWINGS FOR ADDITIONAL DETAILS. COORDINATE ADDITIONAL REQUIREMENTS w/ VALVE SUPPLIER.

7. TRANSFORMER T1: 480 VAC PRIMARY, 120/208 VAC SECONDARY, 3ø, 60 HZ, 80 DEG. C RISE, 45 KVA TRANSFORMER w/ WALL MOUNT BRACKET & COPPER WINDINGS. SQUARE D CAT. NO. EE45T3HBCU (XFMR) & WMB363364 (WALL MOUNT BRACKET). REFERENCE TRANSFORMER NEUTRAL GROUNDING DETAIL.

8. PANELBOARD LPA: 120/208 VAC, 3ø, 4W, 225A, 20" WIDE, 42 CIRCUIT PANELBOARD w/ 3P, 175A MAIN CIRCUIT BREAKER, COPPER BUS & GROUND BAR KIT MOUNTED IN A NEMA 1 ENCLOSURE. SQUARE D CAT. NO. NQ442L2C (INTERIOR), NQMB2HJ (MAIN BREAKER ADAPTER KIT), MH5O (ENCLOSURE), NC5OSHR (HINGED FRONT). PROVIDE 3P, 175A JDL36175 FACTORY INSTALLED MAIN CIRCUIT BREAKER. MOUNT TOP OF ENCLOSURE 6'–0" ABOVE ELEVATED GRATING. PROVIDE BOLT–ON CIRCUIT BREAKERS PER PANELBOARD SCHEDULE.

9. MOTOR CONTROL CENTER (MCC–KPS) w/ 600AF/600AT 100% RATED MAIN CIRCUIT BREAKERS, 100% RATED TIE CIRCUIT BREAKER & KIRK KEY INTERLOCKS. REFERENCE SPECIFICATIONS.

10. 3P, 100A POWER SEEKING AUTOMATIC TRANSFER SWITCH (ATS) w/ AUXILIARY CONTACTS, TIME DELAYS & PILOT LIGHTS MOUNTED IN A NEMA 3R ENCLOSURE. MOUNT TOP OF ENCLOSURE 6'–0" ABOVE ELEVATED GRATING. REFERENCE SPECIFICATIONS.

11. VISUAL ALARM STROBE, UL LISTED, 120 VAC, SINGLE FLASH STROBE w/ ANODIZED ALUMINUM BASE AND RED POLYCARBONATE FRESNEL LENS. FEDERAL SIGNAL MODEL 131ST. MOUNT 9'–0" ABOVE FINISHED GRADE.

    PROVIDE SIGN ON WALL BELOW VISUAL ALARM. SIGN SHALL BE THREE PLY PHENOLIC RED–WHITE–RED ENGRAVED THROUGH THE FIRST RED LAYER. LETTERING SHALL BE 1/2" MIN. EDGES OF SIGN SHALL BE BEVELED 45 DEG. SIGN SHALL READ AS FOLLOWS: "COMBUSTIBLE GAS WARNING – COMBUSTIBLE GAS IS PRESENT IN BUILDING WHEN LIGHT IS FLASHING – DO NOT ENTER BUILDING –".

12. WET WELL BUBBLER PANEL: FREE STANDING TYPE 12 ENCLOSURE. REFERENCE BUBBLER PANEL DETAILS.

13. CONTROL PANEL/PLC: MINIMUM 72" x 72" x 16" NEMA 12 ENCLOSURE. CONTROL PANEL ENCLOSURE TO CONTAIN CONTROL COMPONENTS, HMI SCREEN & PROGRAMMABLE LOGIC CONTROLLER (PLC). REFERENCE SPECIFICATIONS.

14. AIR COMPRESSOR CONTROL PANEL. CONTROL PANEL SHALL BE SHOCK MOUNTED AND SHALL CONTAIN 480V/120V CONTROL TRANSFORMER, MOTOR CIRCUIT PROTECTORS (MCP), MOTOR STARTERS, PRESSURE CONTROL, THERMAL OVERLOAD ELEMENTS & COMPRESSOR/MOTOR SAFETY SHUTDOWNS FOR EACH COMPRESSOR. ALL WIRING, CONDUITS, WIRING CONNECTIONS & END DEVICES ASSOCIATED WITH THE AIR COMPRESSOR SYSTEM SHALL BE PROVIDED & INSTALLED BY THE AIR COMPRESSOR SYSTEM SUPPLIER. COORDINATE ADDITIONAL REQUIREMENTS w/ AIR COMPRESSOR SYSTEM SUPPLIER. A DUPLEX CONTROLLER/ALTERNATOR SHALL BE PROVIDED TO ALTERNATE BETWEEN THE TWO (2) COMPRESSORS AND ASSOCIATED CONTROLS.

15. VACUUM PUMP CONTROL PANEL. CONTROL PANEL SHALL BE SHOCK MOUNTED AND SHALL CONTAIN 480V/120V CONTROL TRANSFORMER, MOTOR CIRCUIT PROTECTORS (MCP), MOTOR STARTERS, THERMAL OVERLOAD ELEMENTS & SAFETY SHUTDOWNS FOR VACUUM PUMP. ALL WIRING, CONDUITS, WIRING CONNECTIONS & END DEVICES ASSOCIATED WITH THE VACUUM PUMP SYSTEM SHALL BE PROVIDED & INSTALLED BY THE SYSTEM SUPPLIER. COORDINATE ADDITIONAL REQUIREMENTS w/ SYSTEM SUPPLIER. A DUPLEX CONTROLLER/ALTERNATOR SHALL BE PROVIDED TO ALTERNATE BETWEEN THE TWO (2) VACUUM PUMPS AND ASSOCIATED CONTROLS.

16. WET WELL GAS DETECTOR: DET–TRONICS PIR9400 GAS SENSOR & TERMINATION BOX.

17. REMOTE CIRCUIT BREAKER CONTROL PANEL (RCBP). REFERENCE REMOTE CIRCUIT BREAKER PANEL DETAILS.

18. SURGE PROTECTIVE DEVICE (SPD): 277/480 VAC, 3ø, 4W. ADVANCED PROTECTION TECHNOLOGIES CAT. NO. TE04XDS204XA, OR EQUAL.

ENGINEER OF RECORD:
BOB E. HALLMAN, P.E.
FLORIDA REGISTRATION NO. 20761

Engineering Design Technologies Corp.
P.O. Box 152403
Tampa, FL 33684-2403
813.289.8080
813.282.9184 FAX
engineering@edt1.com
Certificate of Authorization Number: 4795

CITY of TAMPA
WASTEWATER DEPARTMENT

KRAUSE PS REHABILITATION

KEYED NOTES

NO.	DATE	REVISIONS

DRAWN: RWB
DESIGN: STK
QC: BEH
DATE: 05/01/14

SHEET E-23

B080-085

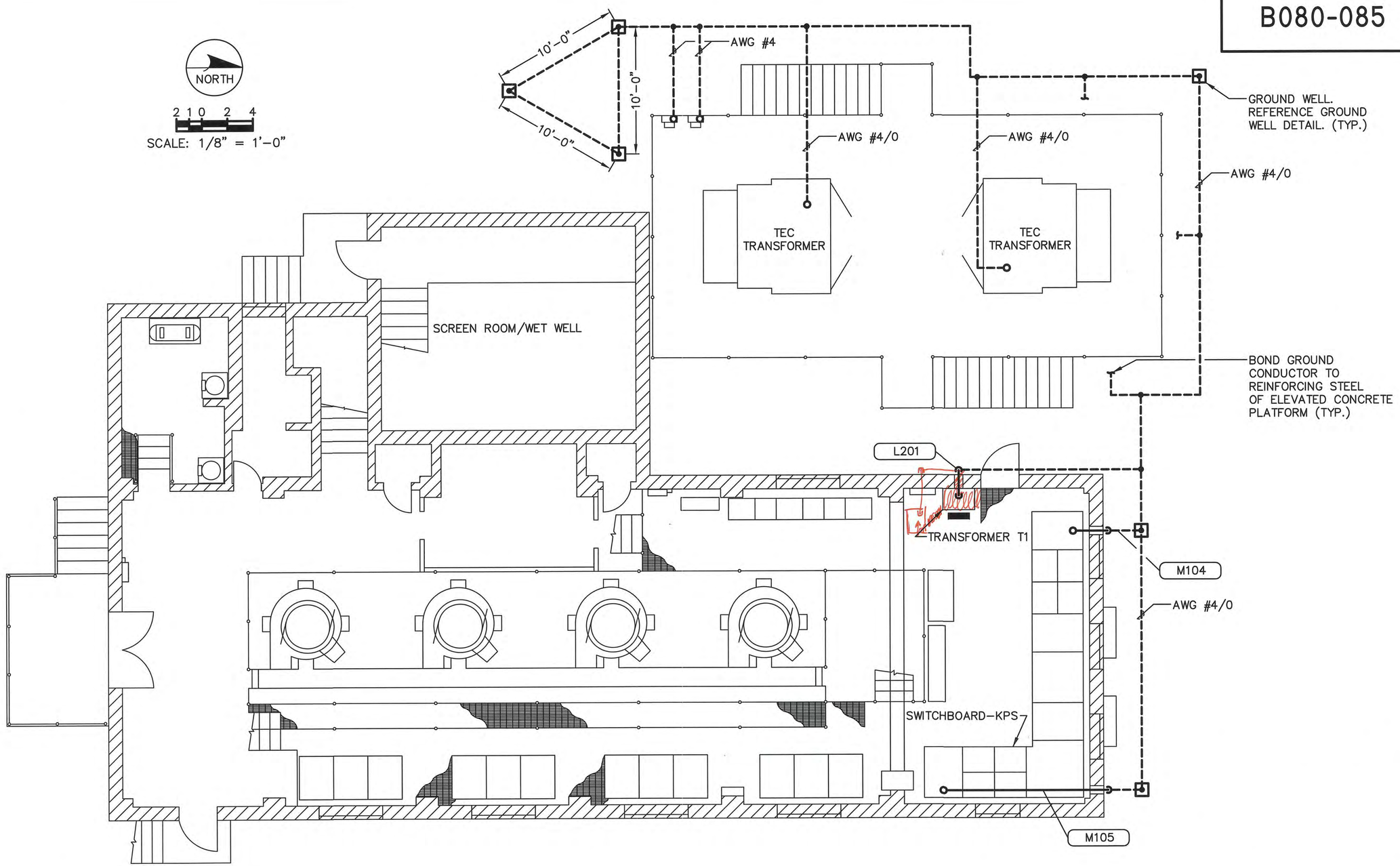

ENGINEER OF RECORD:
BOB E. HALLMAN, P.E.
FLORIDA REGISTRATION NO. 20761

Engineering Design Technologies Corp.
P.O. Box 152403
Tampa, FL 33684-2403
813.289.8080
813.282.9184 FAX
engineering@edt1.com
Certificate of Authorization Number: 4795

CITY of TAMPA
WASTEWATER DEPARTMENT

KRAUSE PS REHABILITATION

GROUNDING GRID DETAILS

NO.	DATE	REVISIONS

DRAWN: RWB
DESIGN: STK
QC: BEH
DATE: 05/01/14

SHEET E-24

B080-086

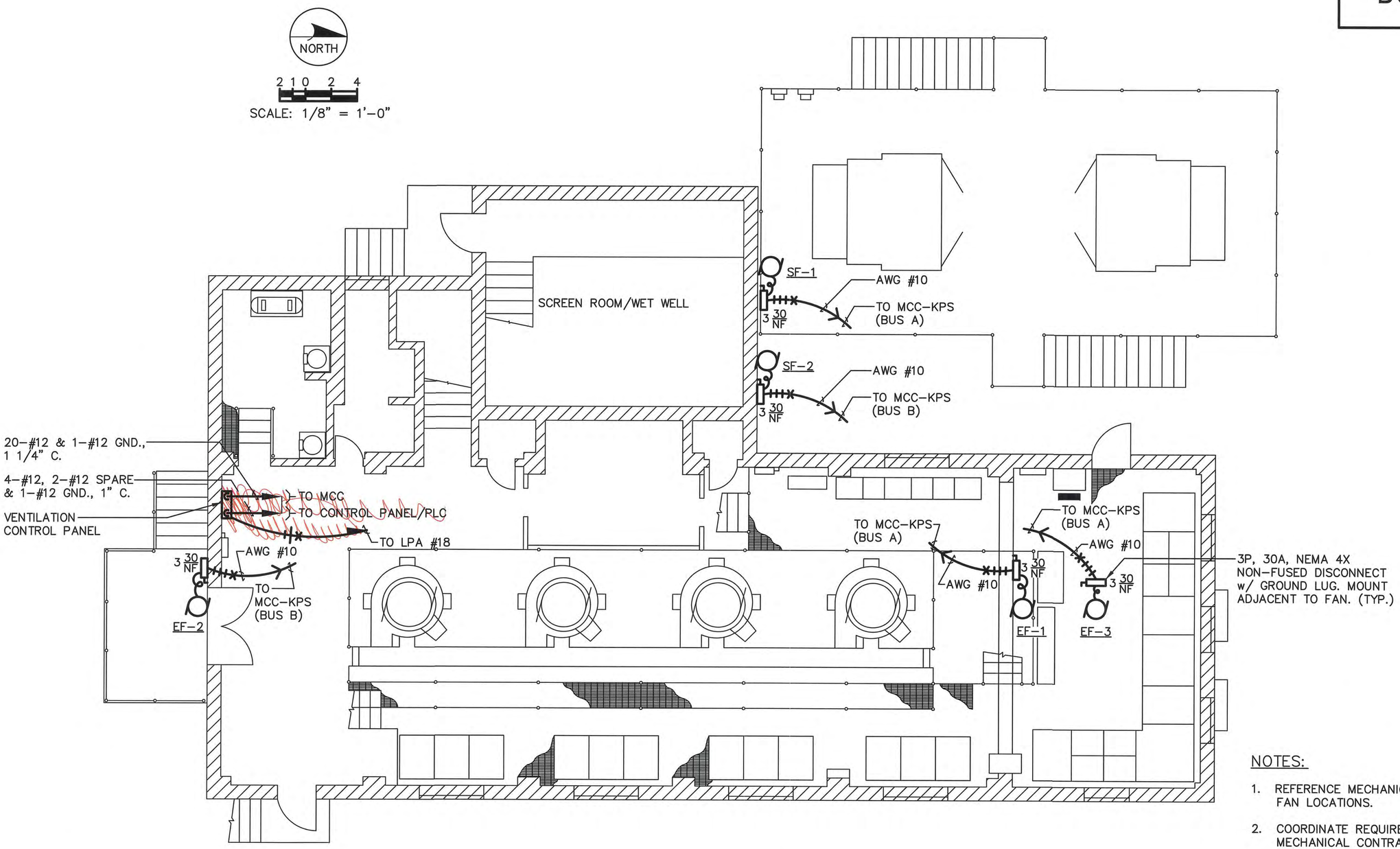

NOTES:

1. REFERENCE MECHANICAL DRAWINGS FOR FAN LOCATIONS.
2. COORDINATE REQUIREMENTS WITH MECHANICAL CONTRACTOR.
3. A WET WELL HIGH LEL LEVEL SHALL TURN ON SUPPLY FAN SF-1 AND SUPPLY FAN SF-2.

ENGINEER OF RECORD:
BOB E. HALLMAN, P.E.
FLORIDA REGISTRATION NO. 20761

EDT
Engineering Design Technologies Corp.
P.O. Box 152403
Tampa, FL 33684-2403
813.289.8080
813.282.9184 FAX
engineering@edt1.com
Certificate of Authorization Number: 4795

CITY of TAMPA
WASTEWATER DEPARTMENT

KRAUSE PS REHABILITATION

EXHAUST FAN & SUPPLY FAN LAYOUT

NO.	DATE	REVISIONS

DRAWN: RWB
DESIGN: STK
QC: BEH
DATE: 05/01/14

SHEET E-25

B080-087

NORTH

4 2 0 6 12

SCALE: 3/16" = 1'-0"

NOTES:

1. LIGHTING FIXTURE F5 & X1 SHALL NOT BE SWITCHED.
2. ALL CONDUITS SHALL BE SURFACE MOUNTED, U.O.N.
3. CONDUITS ROUTED TO EXTERIOR LIGHTING FIXTURES SHALL BE ROUTED ON THE INTERIOR OF THE PUMPING STATION.

KEYED NOTES:

1. 20A, 125V, DUPLEX RECEPTACLE w/ ALUMINUM COVERPLATE MNTD. IN A CAST ALUMINUM BACK BOX. LEVITON CAT. NO. 5362-I (DUPLEX RECEPTACLE), 83003 (COVERPLATE) & BELL CAT. NO. 5324-0 (BACK BOX). CENTER 50" AFF.
2. 20A, 125V, DUPLEX RECEPTACLE w/ ALUMINUM COVERPLATE MNTD. IN A CAST ALUMINUM BACK BOX. LEVITON CAT. NO. 5362-I (DUPLEX RECEPTACLE), 83003 (COVERPLATE) & BELL CAT. NO. 5324-0 (BACK BOX). CENTER 18" ABOVE GRATING.
3. 1P, 20A, 120 VAC LIGHT SWITCH w/ ALUMINUM COVERPLATE MNTD. IN A CAST ALUMINUM BACK BOX. LEVITON CAT. NO. 1221-2I (SWITCH), 83001 (COVERPLATE) & BELL CAT. NO. 5324-0 (BACK BOX). CENTER 50" AFF.
4. 1P, 20A, 120 VAC 3-WAY LIGHT SWITCH w/ ALUMINUM COVERPLATE MNTD. IN A CAST ALUMINUM BACK BOX. LEVITON CAT. NO. 1223-2I (SWITCH), 83001 (COVERPLATE) & BELL CAT. NO. 5324-0 (BACK BOX). CENTER 50" AFF.

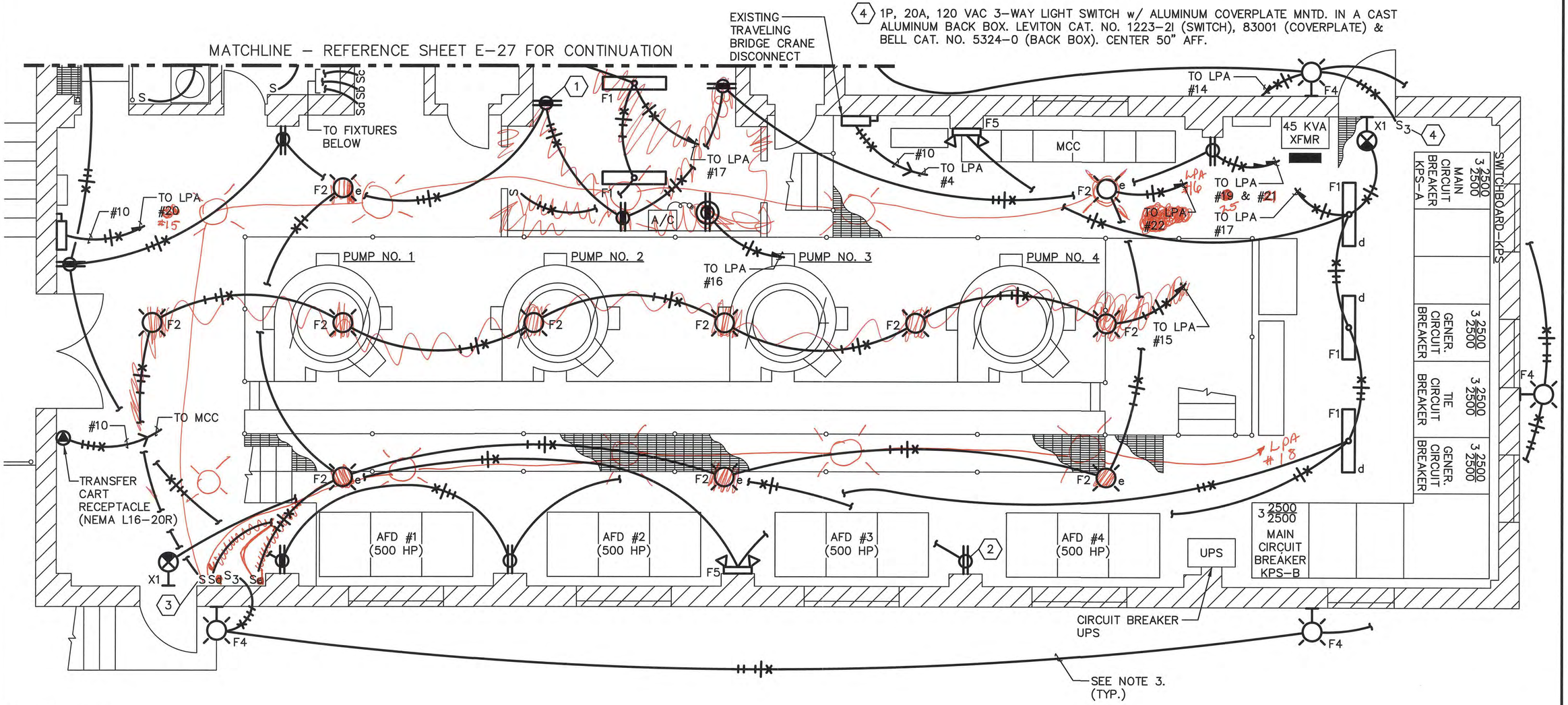

ENGINEER OF RECORD:
BOB E. HALLMAN, P.E.
FLORIDA REGISTRATION NO. 20761

Engineering Design Technologies Corp.
P.O. Box 152403
Tampa, FL 33684-2403
813.289.8080
813.282.9184 FAX
engineering@edt1.com
Certificate of Authorization Number: 4795

CITY of TAMPA
WASTEWATER DEPARTMENT

KRAUSE PS REHABILITATION

ELECTRICAL LIGHTING & POWER PLAN
(UPPER LEVEL – FLOOR ELEV. 7.54' NAVD)
(SHEET 1 OF 2)

NO.	DATE	REVISIONS

DRAWN: RWB
DESIGN: STK
QC: BEH
DATE: 05/01/14

SHEET E-26

B080-088

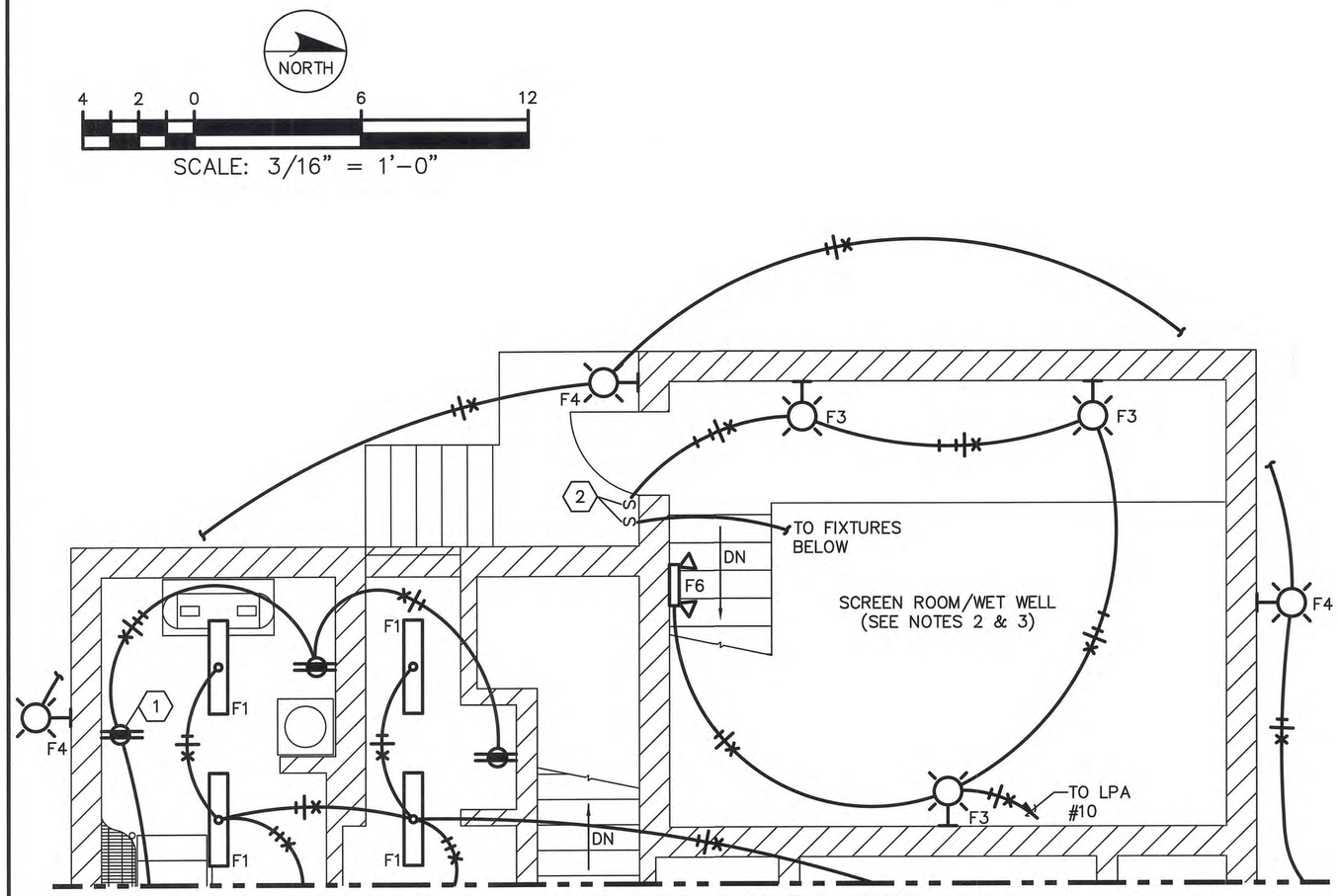

KEYED NOTES:

1. 20A, 125V, DUPLEX RECEPTACLE w/ ALUMINUM COVERPLATE MNTD. IN A CAST ALUMINUM BACK BOX. LEVITON CAT. NO. 5362-I (DUPLEX RECEPTACLE), 83003 (COVERPLATE) & BELL CAT. NO. 5324-0 (BACK BOX). CENTER 50" AFF.

2. 2P, 20A, SINGLE GANG, FACTORY SEALED LIGHT SWITCH. CROUSE-HINDS CAT. NO. EDSC318. CENTER 50" AFF.

NOTES:

1. LIGHTING FIXTURE F6 SHALL NOT BE SWITCHED.
2. ALL CONDUITS ROUTED IN THE WET WELL SHALL BE RIGID HEAVY WALL ALUMINUM w/ 40 MIL PVC EXTERIOR COATING & 2 MIL BLUE URETHANE INTERIOR COATING. OCAL-BLUE SERIES MANUFACTURED BY THOMAS & BETTS OR EQUAL.
3. THE WET WELL CLASSIFICATION IS CLASS I, GROUPS C & D, DIVISION 1 (HAZARDOUS AREA). NEC ARTICLES 500 & 501 ARE APPLICABLE FOR WIRING METHODS USED IN THE WET WELL.
4. ALL CONDUITS EXTENDING FROM THE SCREEN ROOM/WET WELL SHALL BE SEALED WITH A CONDUIT SEALING FITTING AND SEALING COMPOUND. THE SEALING FITTING SHALL BE INSTALLED IMMEDIATELY AS THE CONDUIT EXITS THE SCREEN ROOM/WET WELL. NO OTHER FITTING SHALL BE INSTALLED BETWEEN THE WALL AND THE SEALING FITTING.

ENGINEER OF RECORD:
BOB E. HALLMAN, P.E.
FLORIDA REGISTRATION NO. 20761

Engineering Design Technologies Corp.
P.O. Box 152403
Tampa, FL 33684-2403
813.289.8080
813.282.9184 FAX
engineering@edt1.com
Certificate of Authorization Number: 4795

CITY of TAMPA
WASTEWATER DEPARTMENT

KRAUSE PS REHABILITATION

ELECTRICAL LIGHTING & POWER PLAN
(UPPER LEVEL – FLOOR ELEV. 7.54' NAVD)
(SHEET 2 OF 2)

NO.	DATE	REVISIONS

DRAWN: RWB
DESIGN: STK
QC: BEH
DATE: 05/01/14

SHEET E-27

B080-089

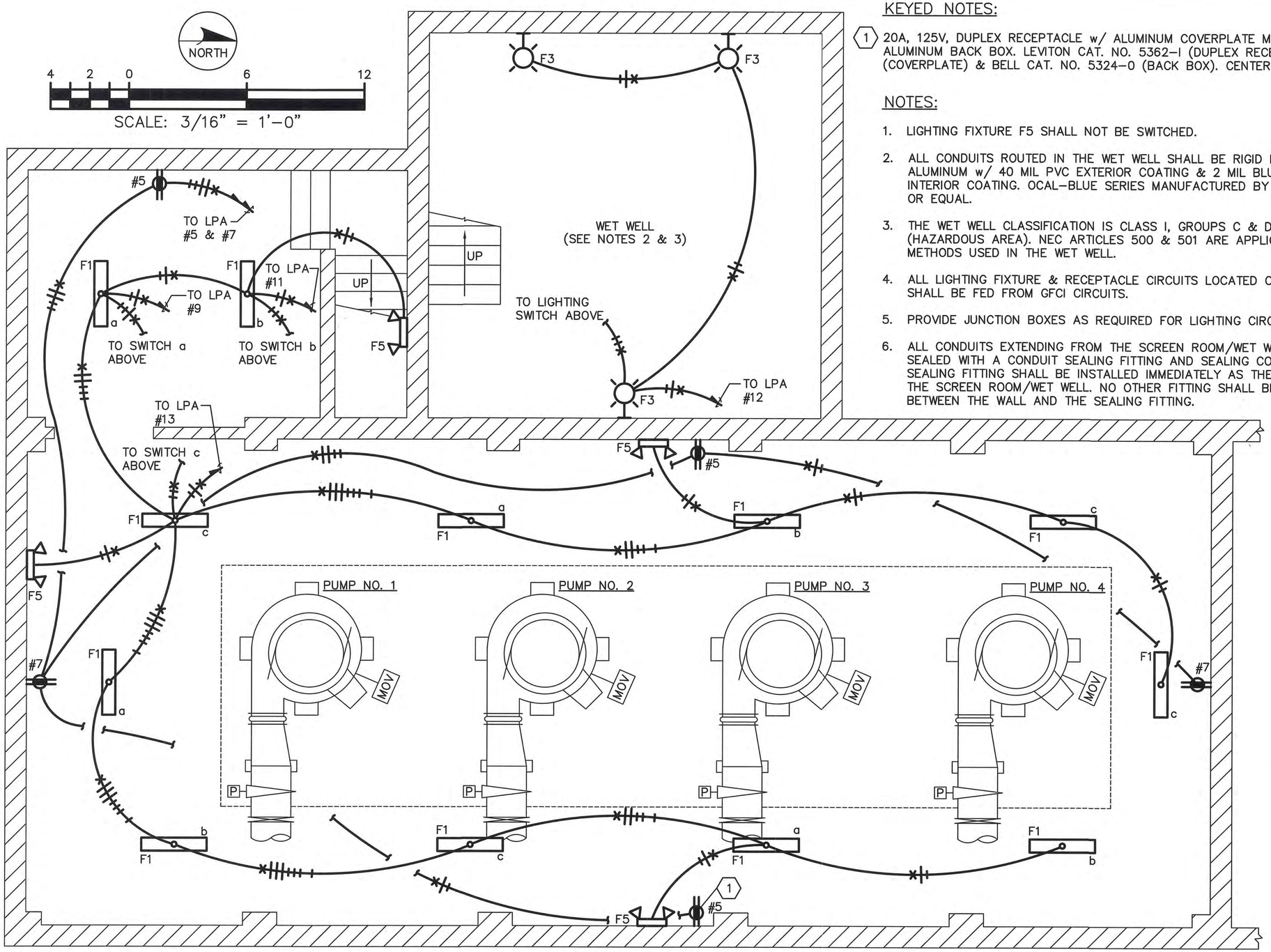

KEYED NOTES:

1. 20A, 125V, DUPLEX RECEPTACLE w/ ALUMINUM COVERPLATE MNTD. IN A CAST ALUMINUM BACK BOX. LEVITON CAT. NO. 5362-I (DUPLEX RECEPTACLE), 83003 (COVERPLATE) & BELL CAT. NO. 5324-0 (BACK BOX). CENTER 50" AFF.

NOTES:

1. LIGHTING FIXTURE F5 SHALL NOT BE SWITCHED.
2. ALL CONDUITS ROUTED IN THE WET WELL SHALL BE RIGID HEAVY WALL ALUMINUM w/ 40 MIL PVC EXTERIOR COATING & 2 MIL BLUE URETHANE INTERIOR COATING. OCAL-BLUE SERIES MANUFACTURED BY THOMAS & BETTS OR EQUAL.
3. THE WET WELL CLASSIFICATION IS CLASS I, GROUPS C & D, DIVISION 1 (HAZARDOUS AREA). NEC ARTICLES 500 & 501 ARE APPLICABLE FOR WIRING METHODS USED IN THE WET WELL.
4. ALL LIGHTING FIXTURE & RECEPTACLE CIRCUITS LOCATED ON THE LOWER LEVEL SHALL BE FED FROM GFCI CIRCUITS.
5. PROVIDE JUNCTION BOXES AS REQUIRED FOR LIGHTING CIRCUITS.
6. ALL CONDUITS EXTENDING FROM THE SCREEN ROOM/WET WELL SHALL BE SEALED WITH A CONDUIT SEALING FITTING AND SEALING COMPOUND. THE SEALING FITTING SHALL BE INSTALLED IMMEDIATELY AS THE CONDUIT EXITS THE SCREEN ROOM/WET WELL. NO OTHER FITTING SHALL BE INSTALLED BETWEEN THE WALL AND THE SEALING FITTING.

ENGINEER OF RECORD:
BOB E. HALLMAN, P.E.
FLORIDA REGISTRATION NO. 20761

Engineering Design Technologies Corp.
P.O. Box 152403
Tampa, FL 33684-2403
813.289.8080
813.282.9184 FAX
engineering@edt1.com
Certificate of Authorization Number: 4795

CITY of TAMPA
WASTEWATER DEPARTMENT

KRAUSE PS REHABILITATION

ELECTRICAL LIGHTING & POWER PLAN
(LOWER LEVEL – FLOOR ELEV. –5.99' NAVD)

NO.	DATE	REVISIONS

DRAWN: RWB
DESIGN: STK
QC: BEH
DATE: 05/01/14

SHEET E-28

B080-090

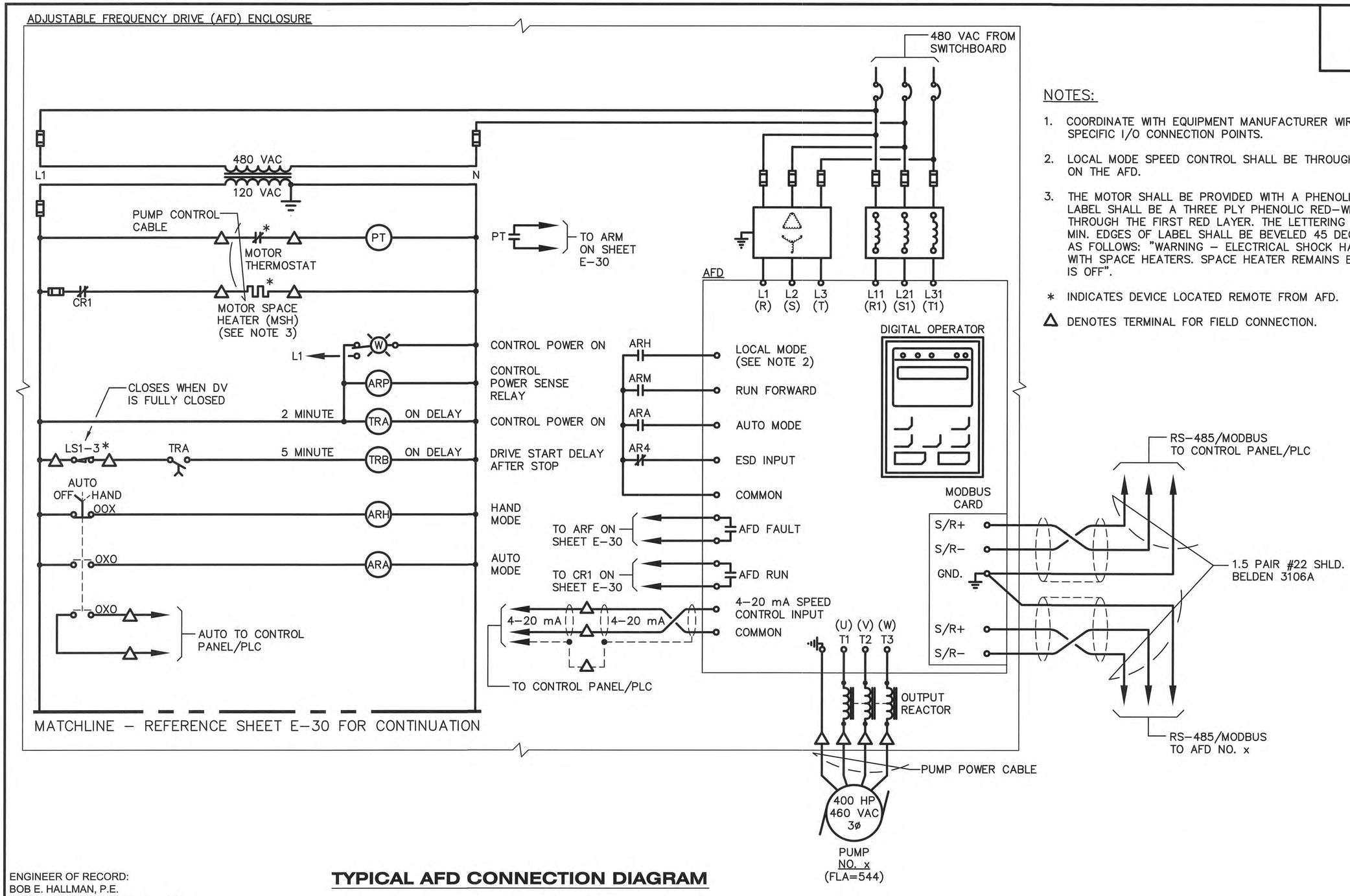

NOTES:

1. COORDINATE WITH EQUIPMENT MANUFACTURER WIRING DETAILS & SPECIFIC I/O CONNECTION POINTS.
2. LOCAL MODE SPEED CONTROL SHALL BE THROUGH THE DIGITAL OPERATOR ON THE AFD.
3. THE MOTOR SHALL BE PROVIDED WITH A PHENOLIC WARNING LABEL. THE LABEL SHALL BE A THREE PLY PHENOLIC RED-WHITE-RED ENGRAVED THROUGH THE FIRST RED LAYER. THE LETTERING SHALL BE 0.5 CM (3/16") MIN. EDGES OF LABEL SHALL BE BEVELED 45 DEG. LABEL SHALL READ AS FOLLOWS: "WARNING – ELECTRICAL SHOCK HAZARD, MOTOR IS EQUIPPED WITH SPACE HEATERS. SPACE HEATER REMAINS ENERGIZED WHEN MOTOR IS OFF".

* INDICATES DEVICE LOCATED REMOTE FROM AFD.

△ DENOTES TERMINAL FOR FIELD CONNECTION.

TYPICAL AFD CONNECTION DIAGRAM

ENGINEER OF RECORD:
BOB E. HALLMAN, P.E.
FLORIDA REGISTRATION NO. 20761

Engineering Design Technologies Corp.
P.O. Box 152403
Tampa, FL 33684-2403
813.289.8080
813.282.9184 FAX
engineering@edt1.com
Certificate of Authorization Number: 4795

CITY of TAMPA
WASTEWATER DEPARTMENT

KRAUSE PS REHABILITATION

TYPICAL AFD CONNECTION DIAGRAM (SHEET 1 OF 2)

NO.	DATE	REVISIONS

DRAWN: RWB
DESIGN: STK
QC: BEH
DATE: 05/01/14

SHEET E-29

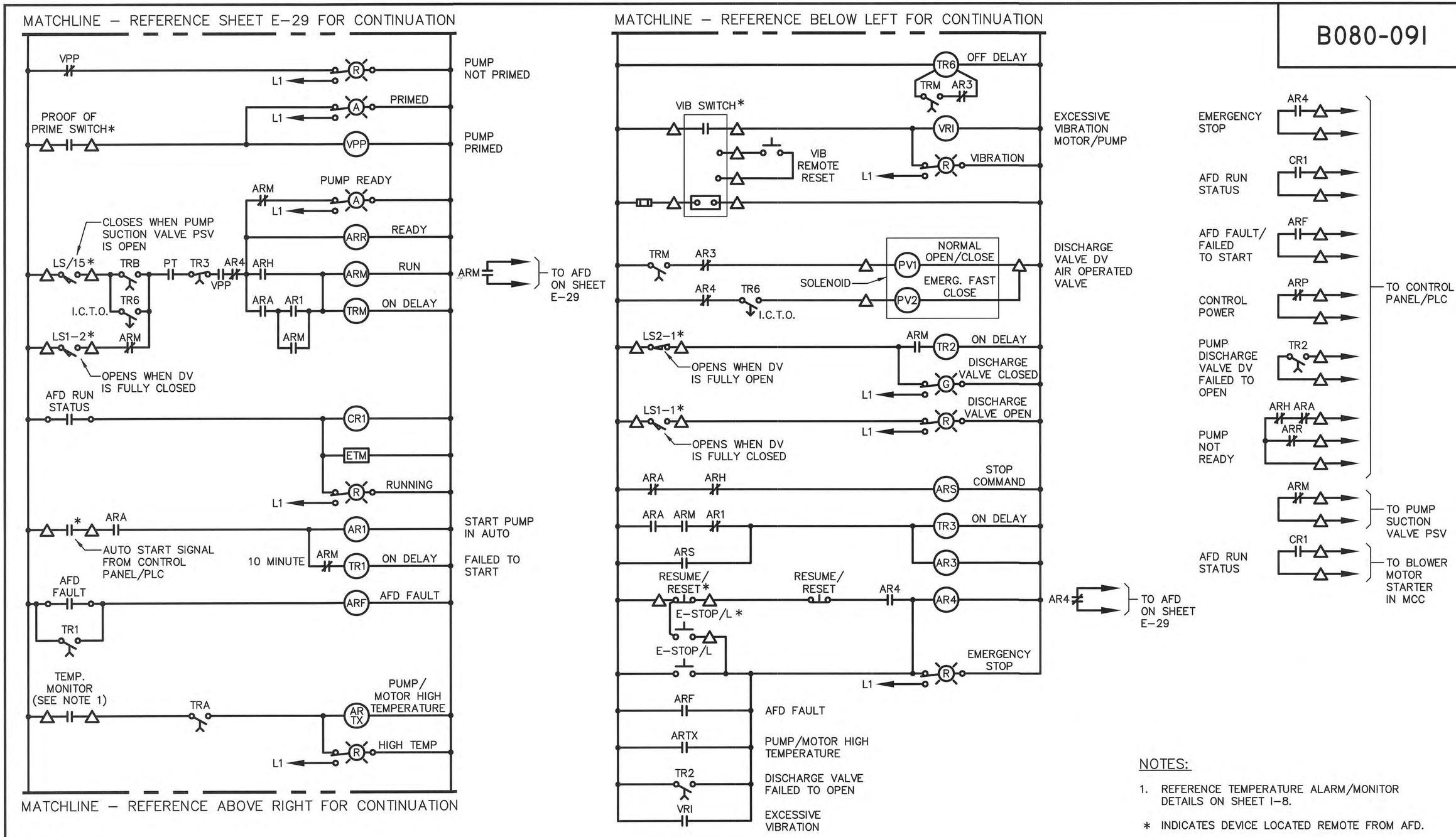

NOTES:

1. REFERENCE TEMPERATURE ALARM/MONITOR DETAILS ON SHEET I-8.

* INDICATES DEVICE LOCATED REMOTE FROM AFD.

△ DENOTES TERMINAL FOR FIELD CONNECTION.

ENGINEER OF RECORD:
BOB E. HALLMAN, P.E.
FLORIDA REGISTRATION NO. 20761

Engineering Design Technologies Corp.
P.O. Box 152403
Tampa, FL 33684-2403
813.289.8080
813.282.9184 FAX
engineering@edt1.com
Certificate of Authorization Number: 4795

CITY of TAMPA
WASTEWATER DEPARTMENT

KRAUSE PS REHABILITATION

TYPICAL AFD CONNECTION DIAGRAM (SHEET 2 OF 2)

NO.	DATE	REVISIONS

DRAWN: RWB
DESIGN: STK
QC: BEH
DATE: 05/01/14

SHEET E-30

B080-092

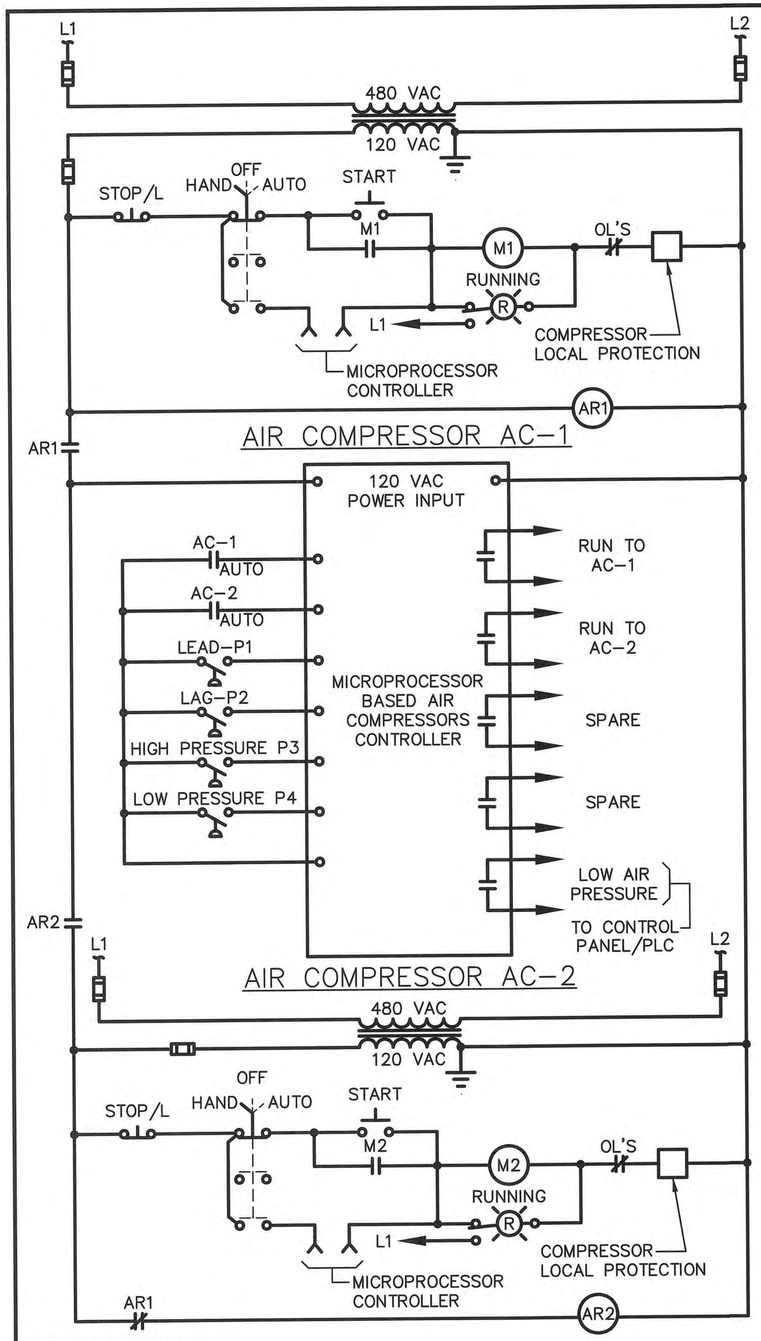

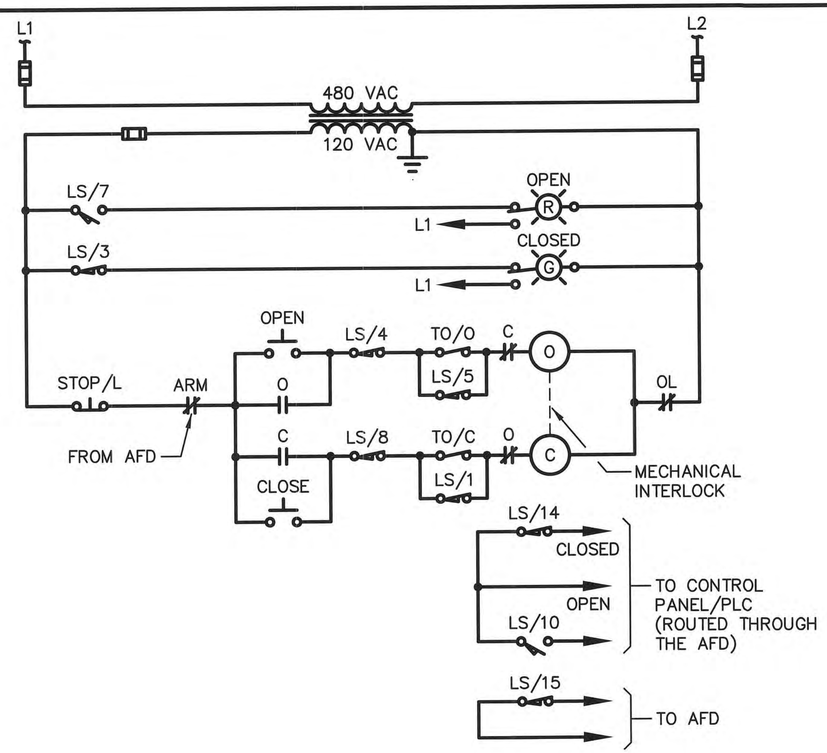

MOTOR OPERATED KNIFE GATE
PUMP SUCTION VALVE (PSV)

ENGINEER OF RECORD:
BOB E. HALLMAN, P.E.
FLORIDA REGISTRATION NO. 20761

Engineering Design Technologies Corp.
P.O. Box 152403
Tampa, FL 33684-2403
813.289.8080
813.282.9184 FAX
engineering@edt1.com
Certificate of Authorization Number: 4795

CITY of TAMPA
WASTEWATER DEPARTMENT

KRAUSE PS REHABILITATION

AIR COMPRESSOR & PUMP SUCTION VALVE CONTROL DIAGRAMS

NO.	DATE	REVISIONS

DRAWN: RWB
DESIGN: STK
QC: BEH
DATE: 05/01/14

SHEET E-31

B080-093

LIMIT SWITCH CONTACT DEVELOPMENT FOR PNEUMATIC DISCHARGE VALVE OPERATORS					
ROTOR NO.	CONTACT NO.	OPERATOR POSITION			CONTACT FUNCTION
		FULL OPEN	INTER-MEDIATE	FULL CLOSED	
LS1	1		X	X	VA. OPEN IND. LT
	2	X			START DELAY CKT.
	3		X	X	RUN CKT.
	4	X			SPARE
LS2	1	X	X		VA. CLOSED IND. LT
	2			X	SPARE
	3	X	X		SPARE
	4			X	SPARE

LIMIT SWITCH CONTACT DEVELOPMENT FOR MOTORIZED PUMP SUCTION VALVE OPERATORS (KNIFE GATE)					
ROTOR NO.	CONTACT NO.	OPERATOR POSITION			CONTACT FUNCTION
		FULL OPEN	INTER-MEDIATE	FULL CLOSED	
1	1	X			BYPASS CKT.
	2	X			PUMP PERMISSIVE
	3		X	X	INDICATOR LIGHT
	4		X	X	FORWARD (OPEN) LIMIT
2	5			X	BYPASS CKT.
	6			X	SPARE
	7	X	X		INDICATOR LIGHT
	8	X	X		REVERSE (CLOSED) LIMIT
3	9	X	X		AUXILIARY
	10	X	X		CONTROL PANEL/PLC
	11			X	AUXILIARY
	12			X	AUXILIARY
4	13		X	X	AUXILIARY
	14		X	X	CONTROL PANEL/PLC
	15	X			PUMP START CKT.
	16	X			AUXILIARY

ENGINEER OF RECORD:
BOB E. HALLMAN, P.E.
FLORIDA REGISTRATION NO. 20761

Engineering Design Technologies Corp.
P.O. Box 152403
Tampa, FL 33684-2403
813.289.8080
813.282.9184 FAX
engineering@edt1.com
Certificate of Authorization Number: 4795

CITY of TAMPA
WASTEWATER DEPARTMENT

KRAUSE PS REHABILITATION

VALVE CONTACT DEVELOPMENT CHARTS

NO.	DATE	REVISIONS

DRAWN: RWB
DESIGN: STK
QC: BEH
DATE: 05/01/14

SHEET E-32

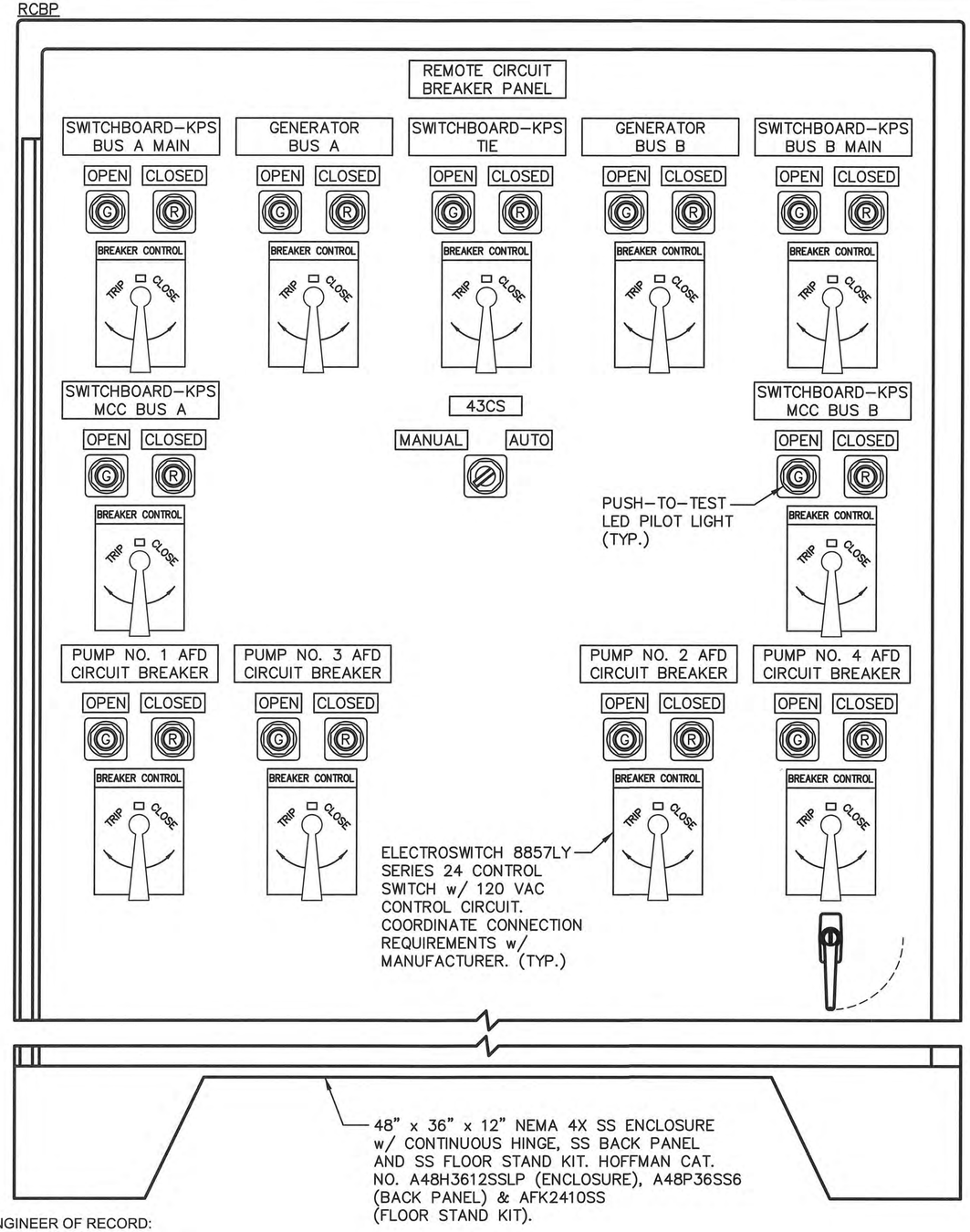

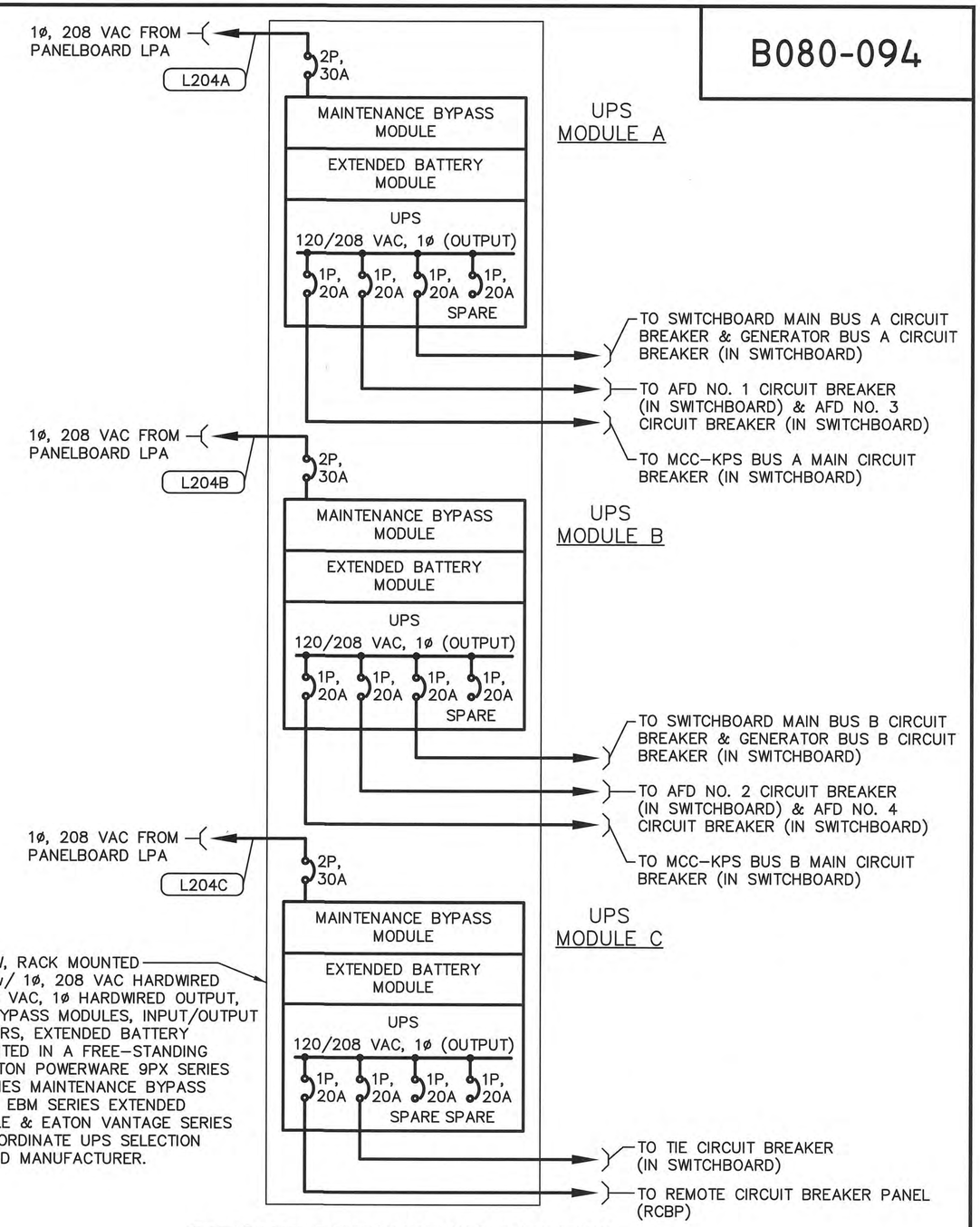

CIRCUIT BREAKER UPS DETAIL

ENGINEER OF RECORD:
BOB E. HALLMAN, P.E.
FLORIDA REGISTRATION NO. 20761

Engineering Design Technologies Corp.
P.O. Box 152403
Tampa, FL 33684-2403
813.289.8080
813.282.9184 FAX
engineering@edt1.com
Certificate of Authorization Number: 4795

CITY of TAMPA
WASTEWATER DEPARTMENT

KRAUSE PS REHABILITATION

REMOTE CIRCUIT BREAKER PANEL (RCBP) DETAILS (SHEET 1 OF 3)

NO.	DATE	REVISIONS

DRAWN: RWB
DESIGN: STK
QC: BEH
DATE: 05/01/14

SHEET E-33

B080-095

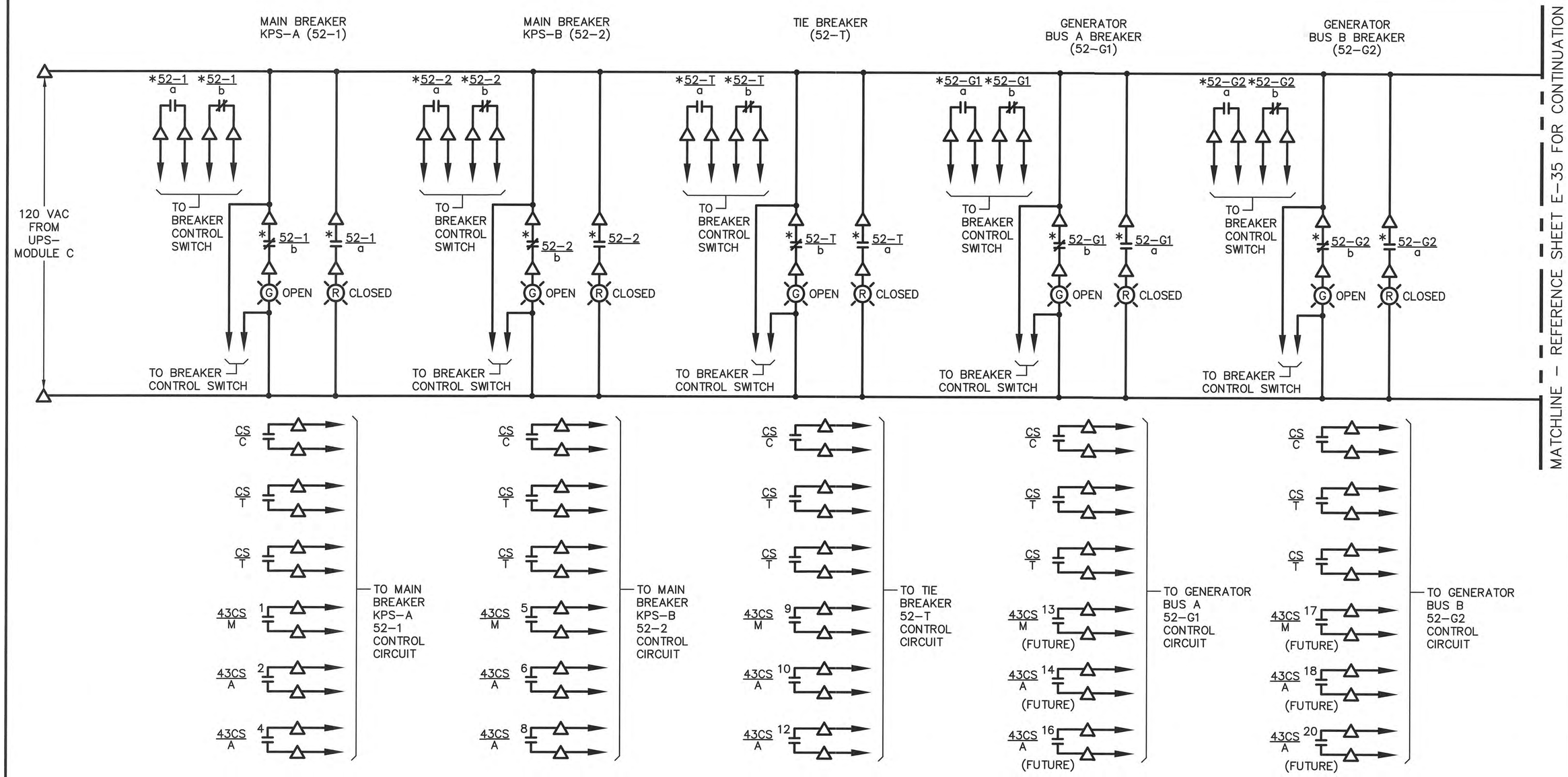

NOTES:

* INDICATES DEVICE LOCATED REMOTE FROM REMOTE CIRCUIT BREAKER PANEL.

△ DENOTES TERMINAL FOR FIELD CONNECTION.

ENGINEER OF RECORD:
BOB E. HALLMAN, P.E.
FLORIDA REGISTRATION NO. 20761

EDT
Engineering Design Technologies Corp.
P.O. Box 152403
Tampa, FL 33684-2403
813.289.8080
813.282.9184 FAX
engineering@edt1.com
Certificate of Authorization Number: 4795

CITY of TAMPA
WASTEWATER DEPARTMENT

KRAUSE PS REHABILITATION

REMOTE CIRCUIT BREAKER PANEL (RCBP) DETAILS (SHEET 2 OF 3)

NO.	DATE	REVISIONS

DRAWN: RWB
DESIGN: STK
QC: BEH
DATE: 05/01/14

SHEET E-34

B080-096

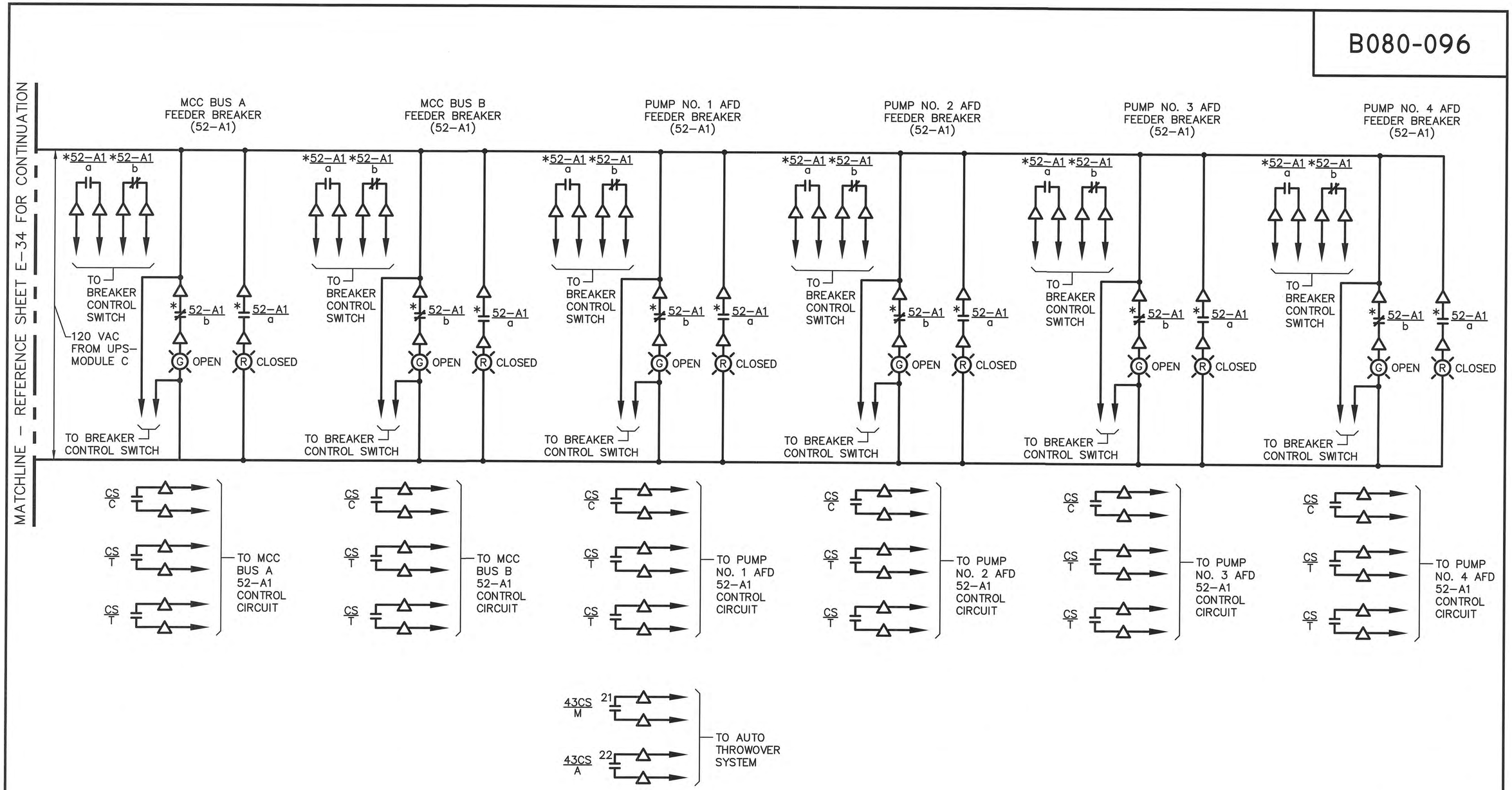

NOTES:

* INDICATES DEVICE LOCATED REMOTE FROM REMOTE CIRCUIT BREAKER PANEL.

△ DENOTES TERMINAL FOR FIELD CONNECTION.

ENGINEER OF RECORD:
BOB E. HALLMAN, P.E.
FLORIDA REGISTRATION NO. 20761

Engineering Design Technologies Corp.
P.O. Box 152403
Tampa, FL 33684-2403
813.289.8080
813.282.9184 FAX
engineering@edt1.com
Certificate of Authorization Number: 4795

CITY of TAMPA
WASTEWATER DEPARTMENT

KRAUSE PS REHABILITATION

REMOTE CIRCUIT BREAKER PANEL (RCBP) DETAILS (SHEET 3 OF 3)

NO.	DATE	REVISIONS

DRAWN: RWB
DESIGN: STK
QC: BEH
DATE: 05/01/14

SHEET E-35

B080-097

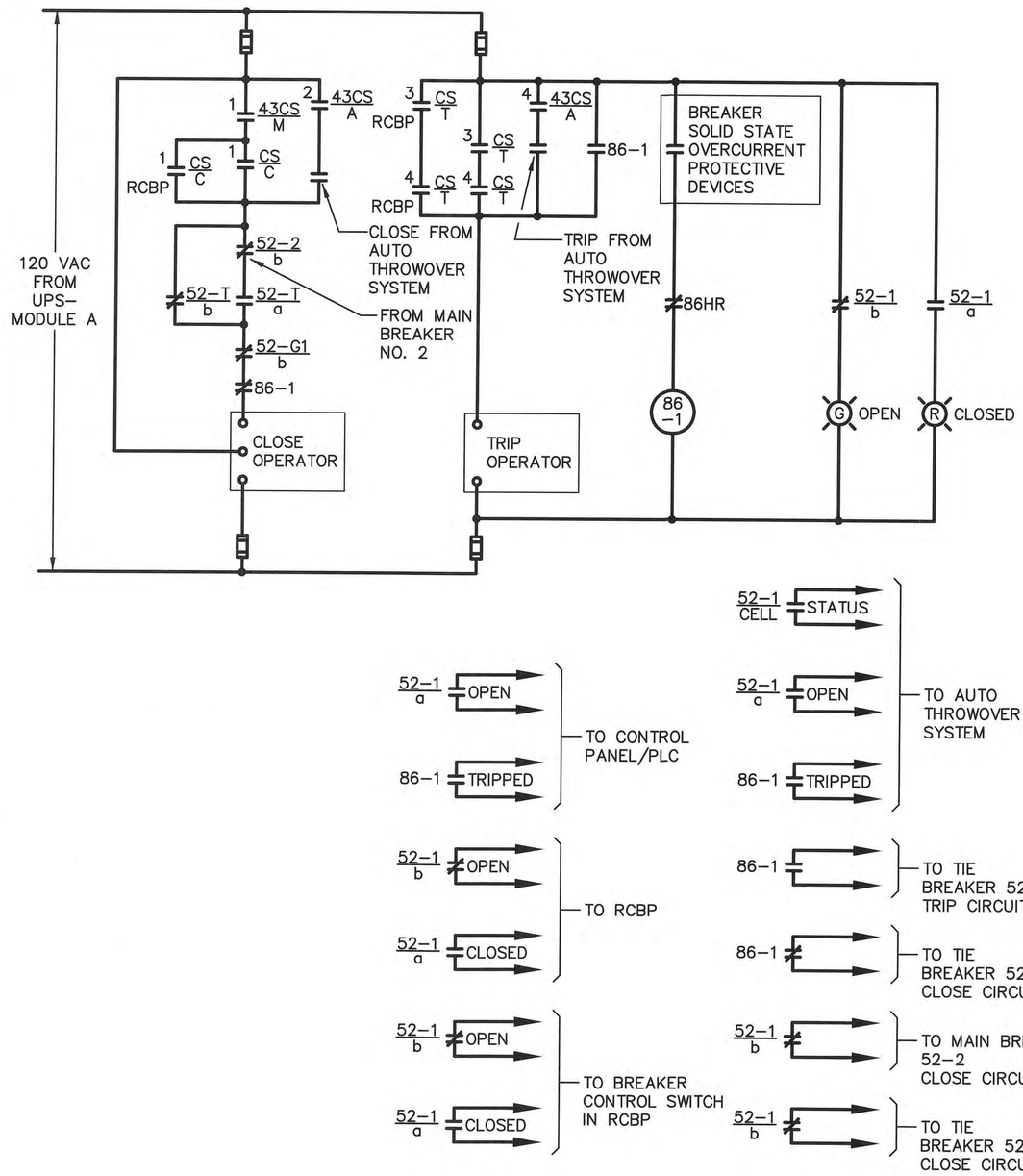

MAIN BREAKER KPS-A (52-1) CONTROL CIRCUIT

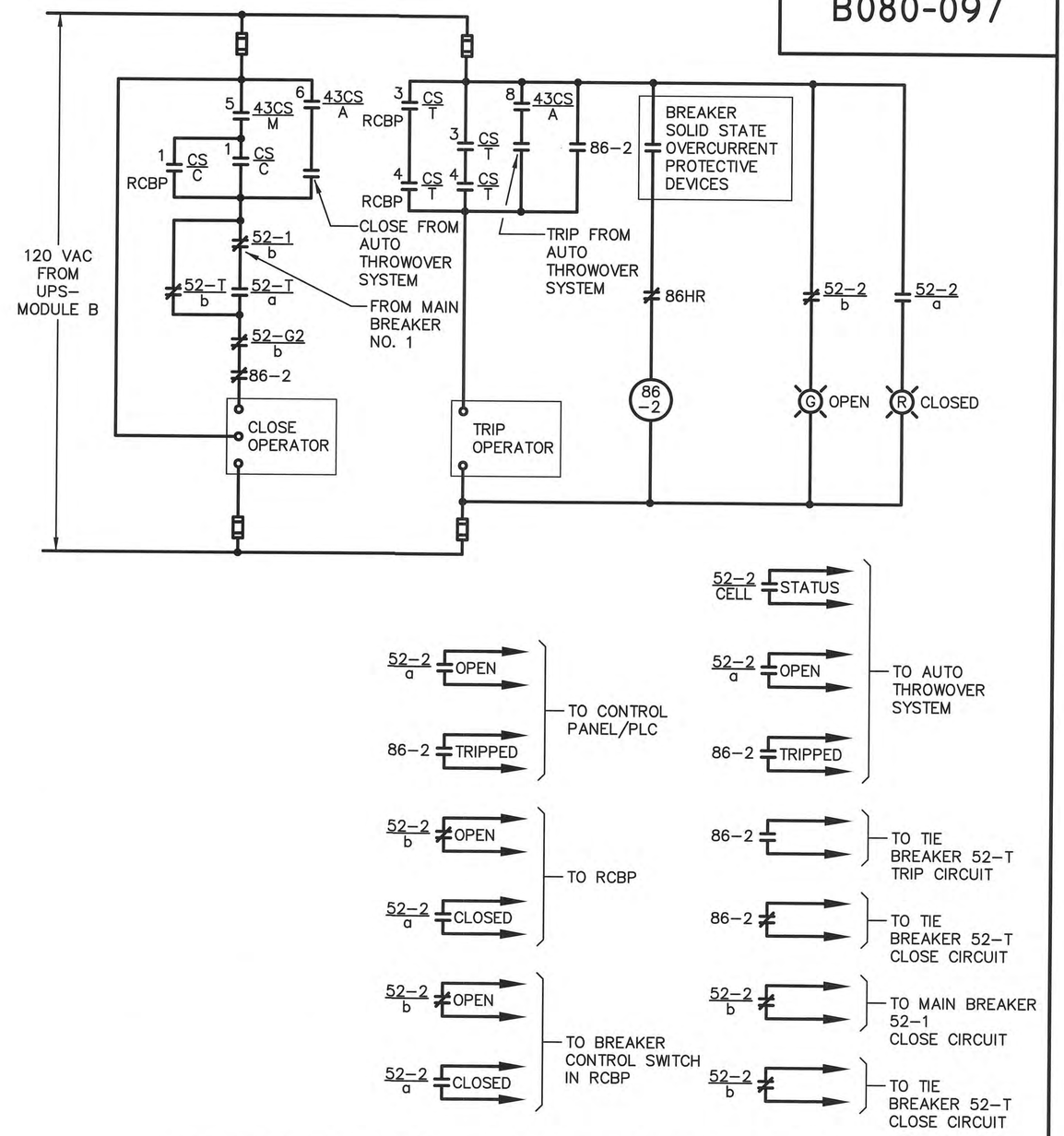

MAIN BREAKER KPS-B (52-2) CONTROL CIRCUIT

ENGINEER OF RECORD:
BOB E. HALLMAN, P.E.
FLORIDA REGISTRATION NO. 20761

Engineering Design Technologies Corp.
P.O. Box 152403
Tampa, FL 33684-2403
813.289.8080
813.282.9184 FAX
engineering@edt1.com
Certificate of Authorization Number: 4795

CITY of TAMPA
WASTEWATER DEPARTMENT

KRAUSE PS REHABILITATION

CIRCUIT BREAKER CONTROL DIAGRAM
(SHEET 1 OF 4)

NO.	DATE	REVISIONS

DRAWN: RWB
DESIGN: STK
QC: BEH
DATE: 05/01/14

SHEET E-36

B080-098

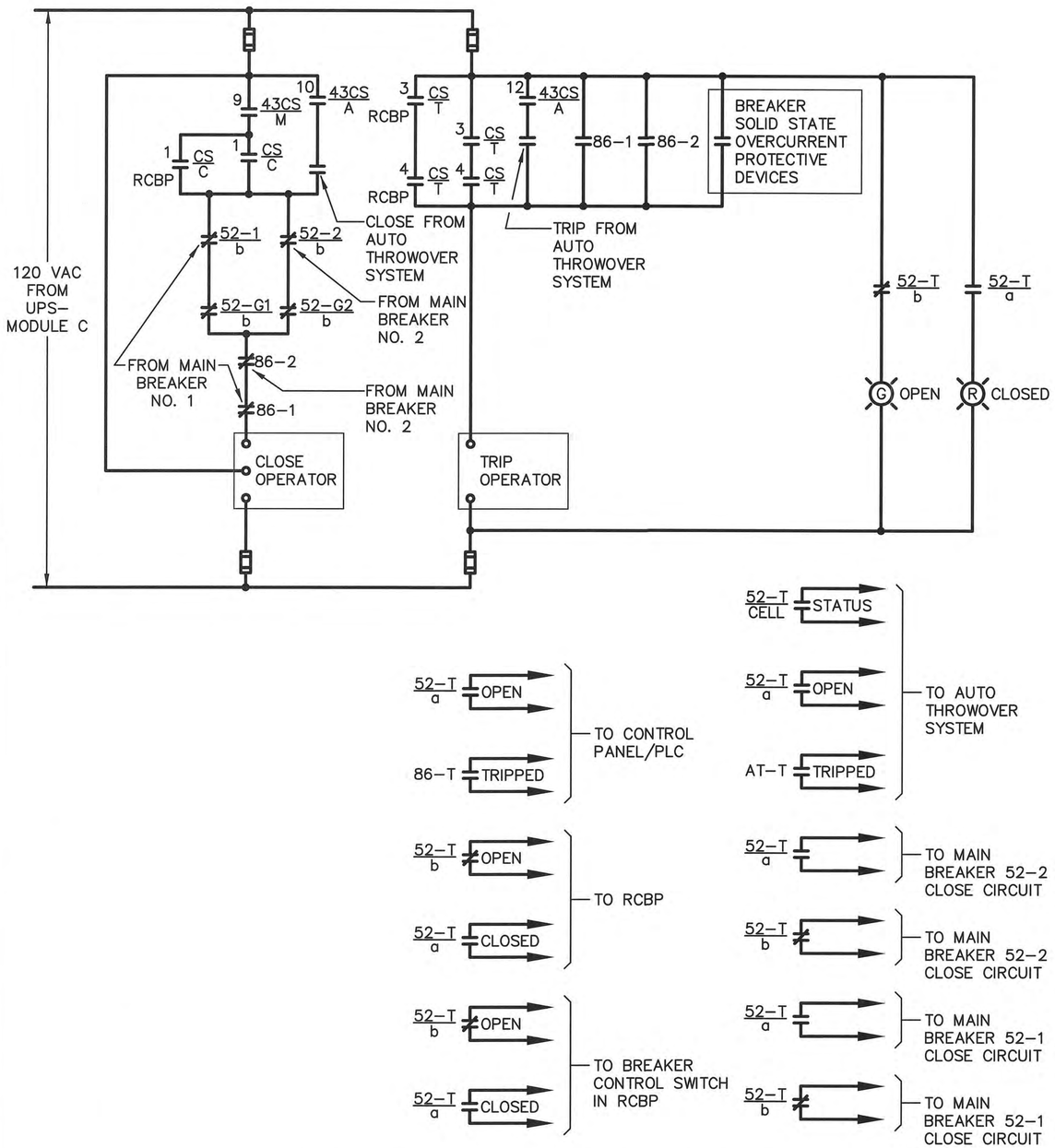

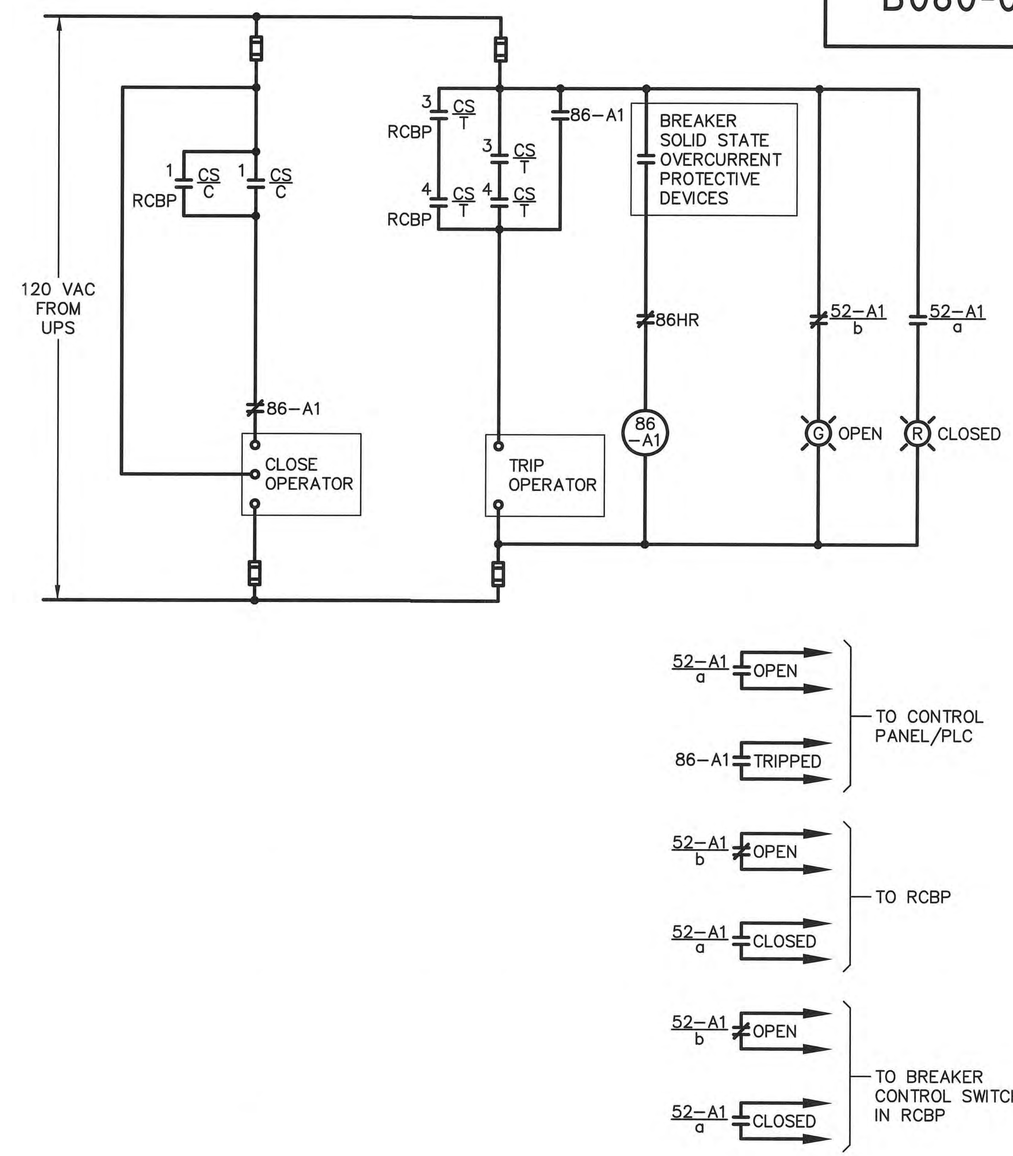

TIE BREAKER CONTROL CIRCUIT

TYPICAL FEEDER BREAKER CONTROL CIRCUIT

ENGINEER OF RECORD:
BOB E. HALLMAN, P.E.
FLORIDA REGISTRATION NO. 20761

Engineering Design Technologies Corp.
P.O. Box 152403
Tampa, FL 33684-2403
813.289.8080
813.282.9184 FAX
engineering@edt1.com
Certificate of Authorization Number: 4795

CITY of TAMPA
WASTEWATER DEPARTMENT

KRAUSE PS REHABILITATION

CIRCUIT BREAKER CONTROL DIAGRAM
(SHEET 2 OF 4)

NO.	DATE	REVISIONS

DRAWN: RWB
DESIGN: STK
QC: BEH
DATE: 05/01/14

SHEET E-37

B080-099

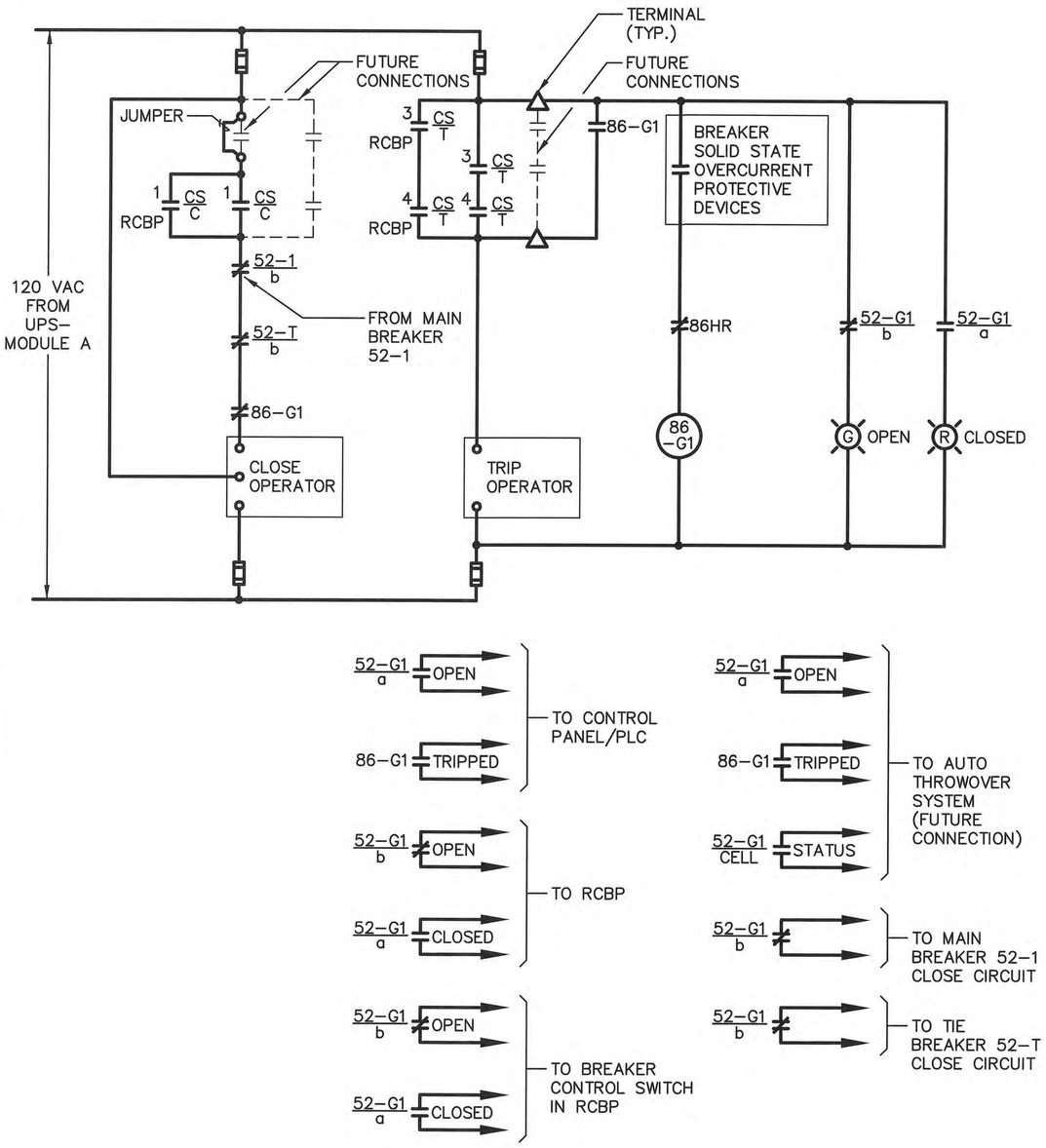

GENERATOR BREAKER 52-G1 CONTROL CIRCUIT

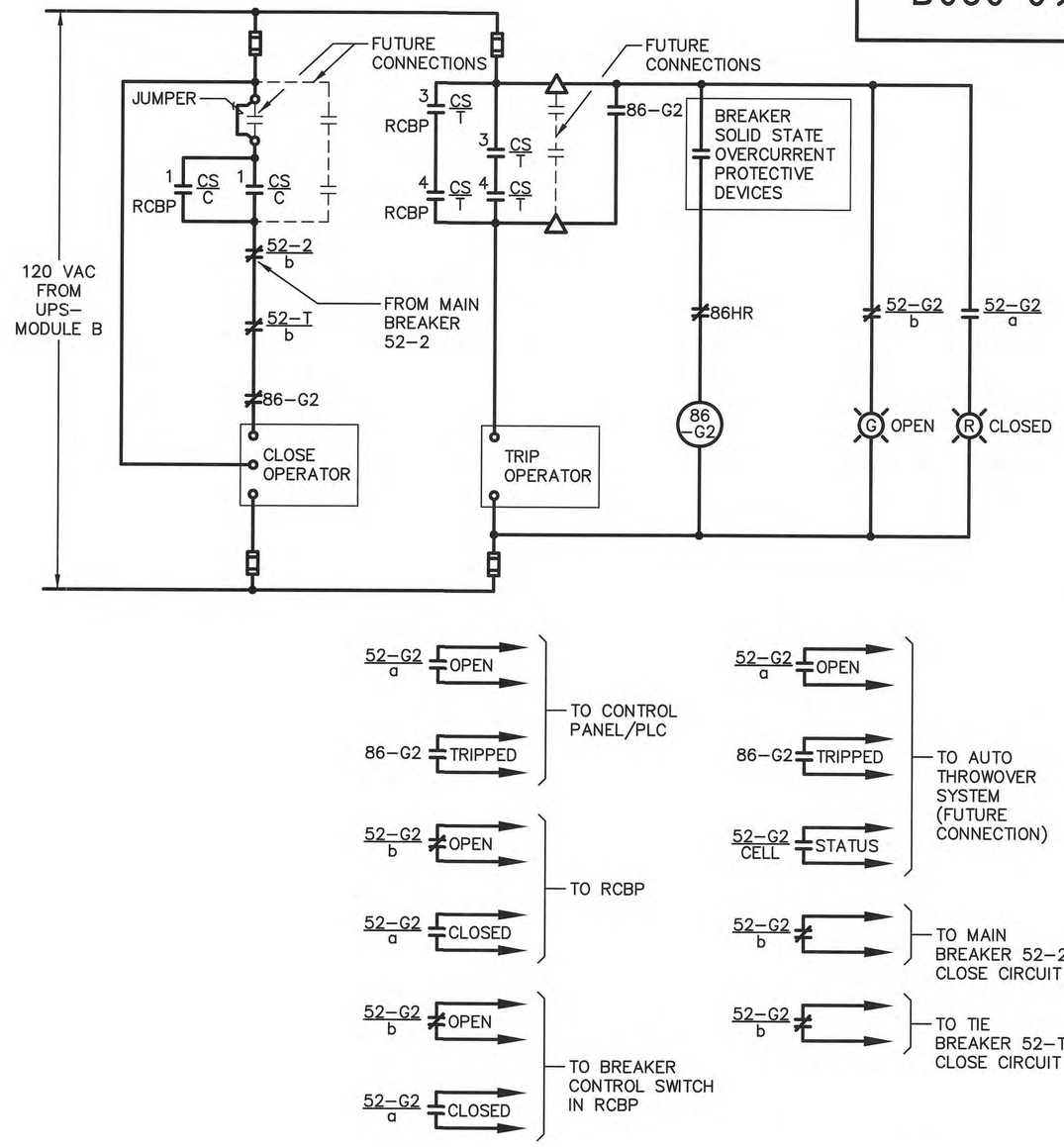

GENERATOR BREAKER 52-G2 CONTROL CIRCUIT

ENGINEER OF RECORD:
BOB E. HALLMAN, P.E.
FLORIDA REGISTRATION NO. 20761

Engineering Design Technologies Corp.
P.O. Box 152403
Tampa, FL 33684-2403
813.289.8080
813.282.9184 FAX
engineering@edt1.com
Certificate of Authorization Number: 4795

CITY of TAMPA
WASTEWATER DEPARTMENT

KRAUSE PS REHABILITATION

CIRCUIT BREAKER CONTROL DIAGRAM
(SHEET 3 OF 4)

NO.	DATE	REVISIONS

DRAWN: RWB
DESIGN: STK
QC: BEH
DATE: 05/01/14

SHEET E-38

B080-100

MAIN–TIE–MAIN BREAKERS MANUAL/AUTO TRANSFER SELECTOR SWITCH 43CS

CONTACTS HANDLE END		POSITION MANUAL	POSITION AUTO	FUNCTION
1 2	1	X		MAIN BREAKER NO. 1 CLOSE CIRCUIT
	2		X	MAIN BREAKER NO. 1 CLOSE CIRCUIT
3 4	3	X		SPARE
	4		X	MAIN BREAKER NO. 1 TRIP CIRCUIT
5 6	5	X		MAIN BREAKER NO. 2 CLOSE CIRCUIT
	6		X	MAIN BREAKER NO. 2 CLOSE CIRCUIT
7 8	7	X		SPARE
	8		X	MAIN BREAKER NO. 2 TRIP CIRCUIT
9 10	9	X		TIE BREAKER CLOSE CIRCUIT
	10		X	TIE BREAKER CLOSE CIRCUIT
11 12	11	X		SPARE
	12		X	TIE BREAKER TRIP CIRCUIT
13 14	13	X		GENERATOR BREAKER NO. 1 CLOSE CIRCUIT (FUTURE)
	14		X	
15 16	15	X		GENERATOR BREAKER NO. 1 TRIP CIRCUIT (FUTURE)
	16		X	
17 18	17	X		GENERATOR BREAKER NO. 2 CLOSE CIRCUIT (FUTURE)
	18		X	
19 20	19	X		GENERATOR BREAKER NO. 2 TRIP CIRCUIT (FUTURE)
	20		X	
21 22	21	X		TO AUTO THROWOVER SYSTEM
	22		X	

X – INDICATES CONTACT CLOSED (MAINTAINED CONTACT)

TYPICAL BREAKER CONTROL SWITCH CS AT SWITCHBOARD AND RCBP

CONTACTS HANDLE END		POSITION CLOSE	POSITION NORMAL	POSITION TRIP	FUNCTION
1 2	1	X			CLOSE CIRCUIT
	2	X			SPARE
3 4	3			X	TRIP CIRCUIT
	4			X	
5 6	5	X	X		SPARE
	6		X	X	

X – INDICATES CONTACT CLOSED (SPRING RETURN FROM CLOSE AND TRIP TO NORMAL)

ENGINEER OF RECORD:
BOB E. HALLMAN, P.E.
FLORIDA REGISTRATION NO. 20761

Engineering Design Technologies Corp.
P.O. Box 152403
Tampa, FL 33684-2403
813.289.8080
813.282.9184 FAX
engineering@edt1.com
Certificate of Authorization Number: 4795

CITY of TAMPA
WASTEWATER DEPARTMENT

KRAUSE PS REHABILITATION

CIRCUIT BREAKER CONTROL DIAGRAM
(SHEET 4 OF 4)

NO.	DATE	REVISIONS

DRAWN: RWB
DESIGN: STK
QC: BEH
DATE: 05/01/14

SHEET E-39

B080-101

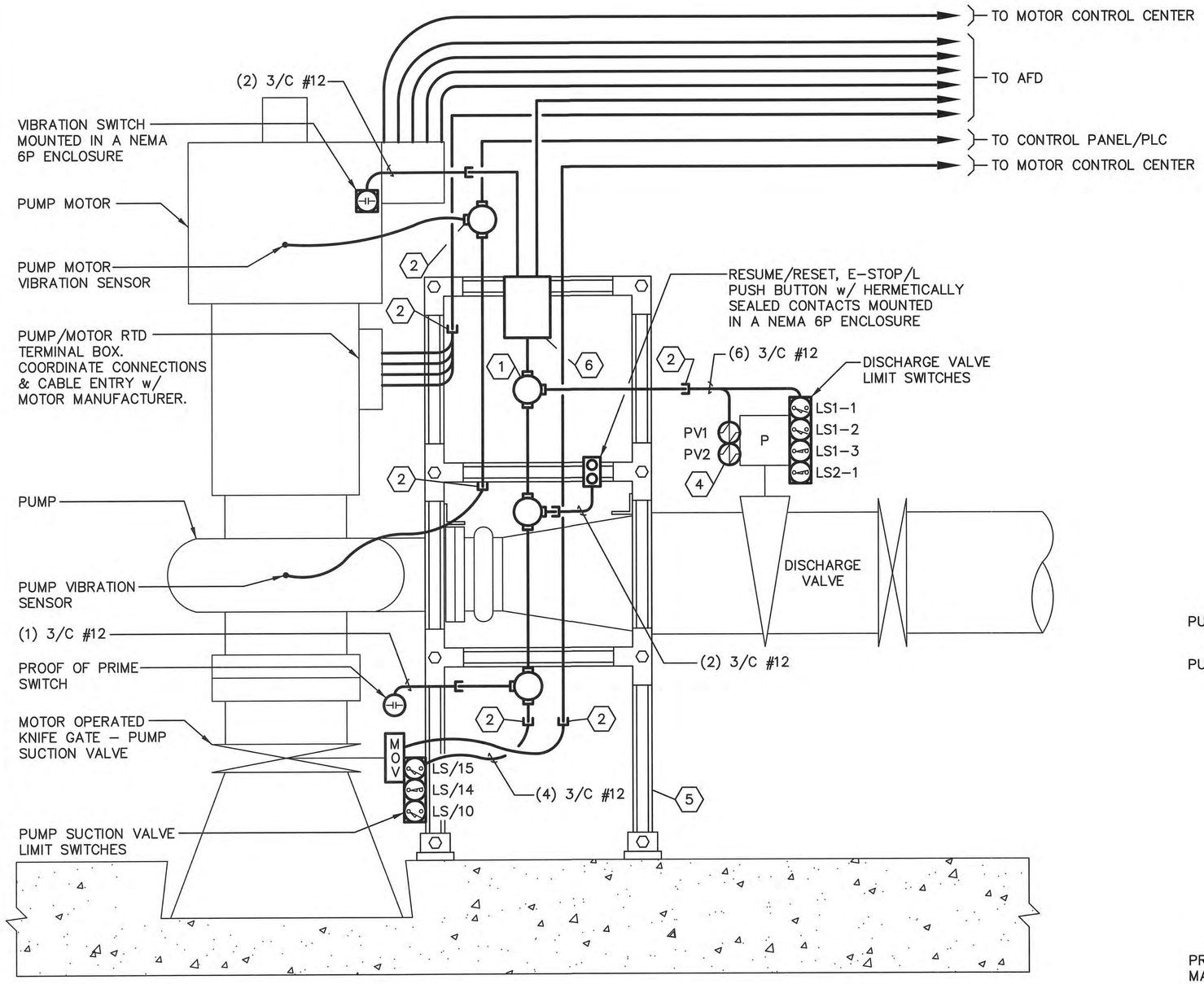

ELEVATION
(NOT TO SCALE)

KEYED NOTES:

1. CROUSE-HINDS GUFX SERIES JUNCTION BOX. SIZE AS REQUIRED. (TYP.)
2. CORD/CABLE FITTING c/w NEOPRENE BUSHING & GLAND NUT SIZED FOR CABLE(S). CROUSE-HINDS CGB SERIES. (TYP.)
3. VIBRATION/TEMPERATURE SENSOR w/ INTEGRAL CABLE. CTC TA104 SERIES. COORDINATE MOUNTING AND LOCATION w/ VIBRATION/TEMPERATURE MONITORING SUPPLIER AND MOTOR MANUFACTURER. COORDINATE MOUNTING & LOCATION w/ VIBRATION/TEMPERATURE MONITORING SUPPLIER AND MOTOR MANUFACTURER.
4. 4-WAY, N.C., FULLY PORTED, ELECTRICALLY OPERATED SOLENOID VALVE w/ WATERTIGHT, HI-SHOCK ENCLOSURE, FORGED BRASS OR BRONZE BODY, RESILIANT BUNA "N" VALVE SEAT. COORDINATE SOLENOID SELECTION AND INSTALLATION w/ VALVE SUPPLIER. (TYP. OF 2)
5. SS CONDUIT SUPPORT RACK CONSTRUCTED OF B-LINE 1 5/8" x 1 5/8" B22SS4 UNISTRUT, B-LINE B143SS4 CORNER PLATES, B-LINE B280SQSS4 POST BASES & B-LINE B133SS4 TEE PLATES. SECURE SUPPORT RACK TO PIPING FLANGE w/ 3" x 3" x 1/2" ANGLE. PROVIDE B-LINE B2000SS4 CONDUIT CLAMPS AS REQUIRED.
6. 16" x 12" x 8" NEMA 4X SS ENCLOSURE w/ CONTINUOUS HINGE.

NOTES:

1. ALL ELECTRICAL CONNECTIONS SHALL BE WATERTIGHT AND SUITABLE FOR SUBMERSIBLE APPLICATIONS TO A DEPTH OF 15'. THE CABLE ENTRY INTO ALL END DEVICES SHALL BE SUITABLE TO ENSURE A WATERTIGHT AND SUBMERSIBLE SEAL.
2. ALL CABLES ROUTED TO END DEVICES SHALL BE OF A TYPE FOR EXTRA-HARD USAGE & SUITABLE FOR SUBMERSIBLE APPLICATIONS.
3. REFERENCE PUMP CABLE SUPPORT DETAIL.

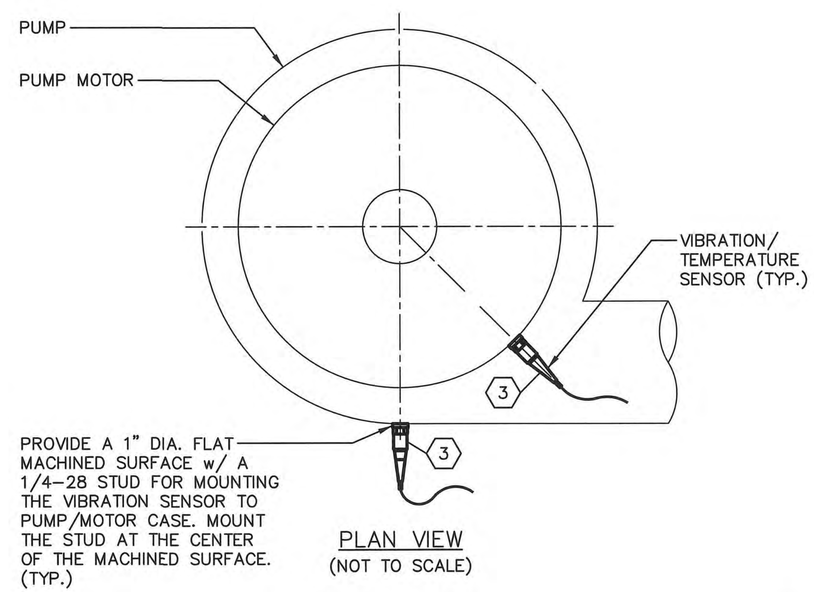

PLAN VIEW
(NOT TO SCALE)

ENGINEER OF RECORD:
BOB E. HALLMAN, P.E.
FLORIDA REGISTRATION NO. 20761

Engineering Design Technologies Corp.
P.O. Box 152403
Tampa, FL 33684-2403
813.289.8080
813.282.9184 FAX
engineering@edt1.com
Certificate of Authorization Number: 4795

CITY of TAMPA
WASTEWATER DEPARTMENT

KRAUSE PS REHABILITATION

PUMP/MOTOR CONNECTION DETAIL

NO.	DATE	REVISIONS

DRAWN: RWB
DESIGN: STK
QC: BEH
DATE: 05/01/14

SHEET E-40

B080-I02

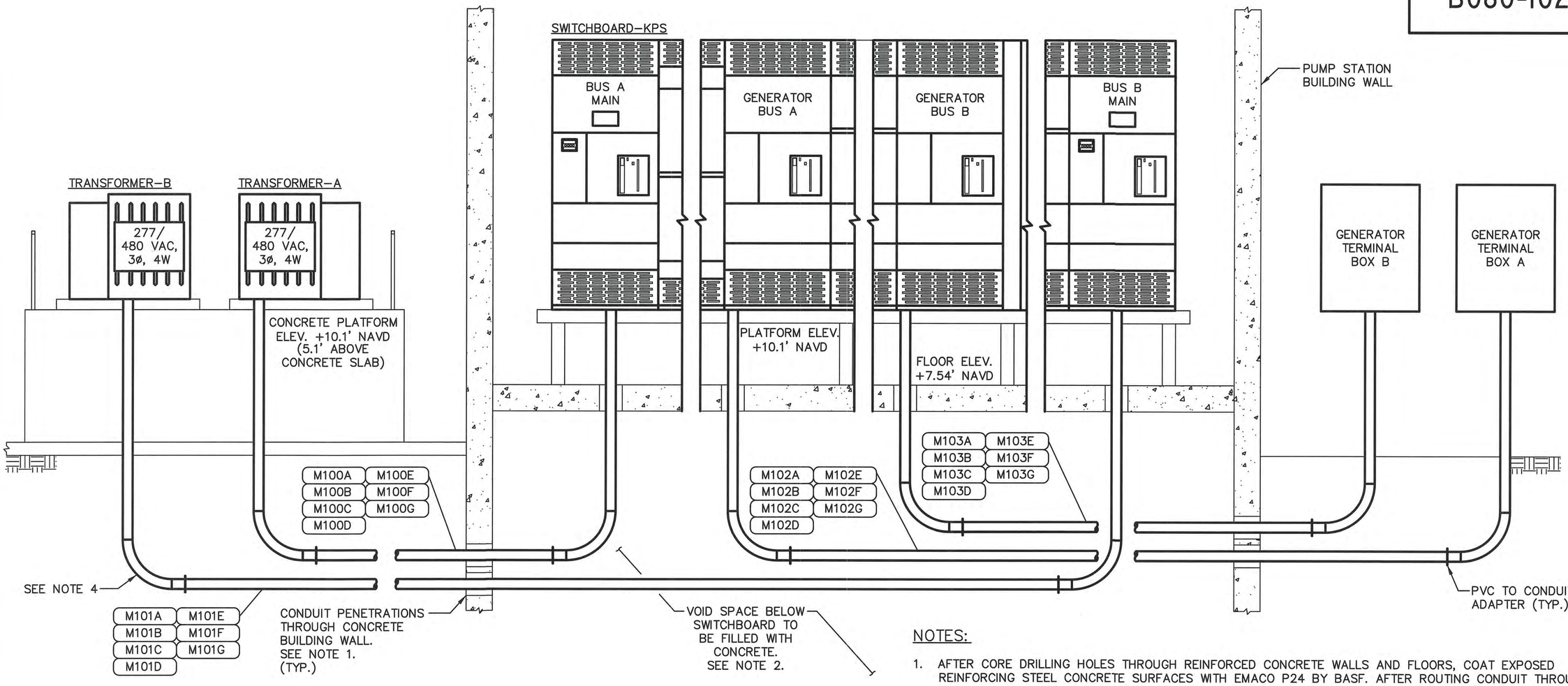

NOTES:

1. AFTER CORE DRILLING HOLES THROUGH REINFORCED CONCRETE WALLS AND FLOORS, COAT EXPOSED REINFORCING STEEL CONCRETE SURFACES WITH EMACO P24 BY BASF. AFTER ROUTING CONDUIT THROUGH HOLE, FILL AND FINISH CONCRETE WITH A SHRINKAGE COMPENSATING REPAIR MORTAR WITH CORROSION INHIBITING PROPERTIES, EMACO S66 C1 BY BASF. REFERENCE STRUCTURAL DRAWINGS.

2. CONDUITS SHALL BE ROUTED IN LOWER LEVEL VOID BENEATH THE SWITCHBOARD PRIOR TO AREA BEING FILLED WITH CONCRETE.

3. PROVIDE PVC SLEEVES FOR ALL METALLIC CONDUIT PENETRATIONS THROUGH CONCRETE. WHERE ALUMINUM SURFACES SUCH AS BOXES, CONDUIT OR STRUCTURAL SUPPORTS COME IN CONTACT WITH INCOMPATIBLE METALS, LIME, MORTAR, CONCRETE OR OTHER MASONRY MATERIALS, THE CONTACT AREA SHALL BE GIVEN ONE FIELD COAT OF KOPPERS METAL PASSIVATOR NO. 40 AND ONE COAT OF KOPPERS BITUMASTIC SUPER SERVICE BLACK OR TWO COATS OF ASPHALT VARNISH CONFORMING TO FED. SPEC. TT-V-51.

4. ALL CONDUIT EXPOSED ABOVE GRADE SHALL BE RIGID HEAVY WALL ALUMINUM, UNLESS OTHERWISE NOTED. CONDUITS EXTENDING BELOW GRADE SHALL BE RIGID HEAVY WALL ALUMINUM CONDUIT THROUGH AND INCLUDING THE FIRST 90 DEGREE ELBOW (OR EQUIVALENT SET OF FITTINGS) INSTALLED BELOW GRADE. ALL PVC CONDUIT SHALL BE SCHEDULE 80. CONNECTIONS TO PVC CONDUIT SHALL BE MADE w/ A RIGID ALUMINUM TO PVC CONDUIT ADAPTER.

ENGINEER OF RECORD:
BOB E. HALLMAN, P.E.
FLORIDA REGISTRATION NO. 20761

Engineering Design Technologies Corp.
P.O. Box 152403
Tampa, FL 33684-2403
813.289.8080
813.282.9184 FAX
engineering@edt1.com
Certificate of Authorization Number: 4795

CITY of TAMPA
WASTEWATER DEPARTMENT

KRAUSE PS REHABILITATION

SWITCHBOARD CONDUIT DETAILS

NO.	DATE	REVISIONS

DRAWN: RWB
DESIGN: STK
QC: BEH
DATE: 05/01/14

SHEET E-41

B080-103

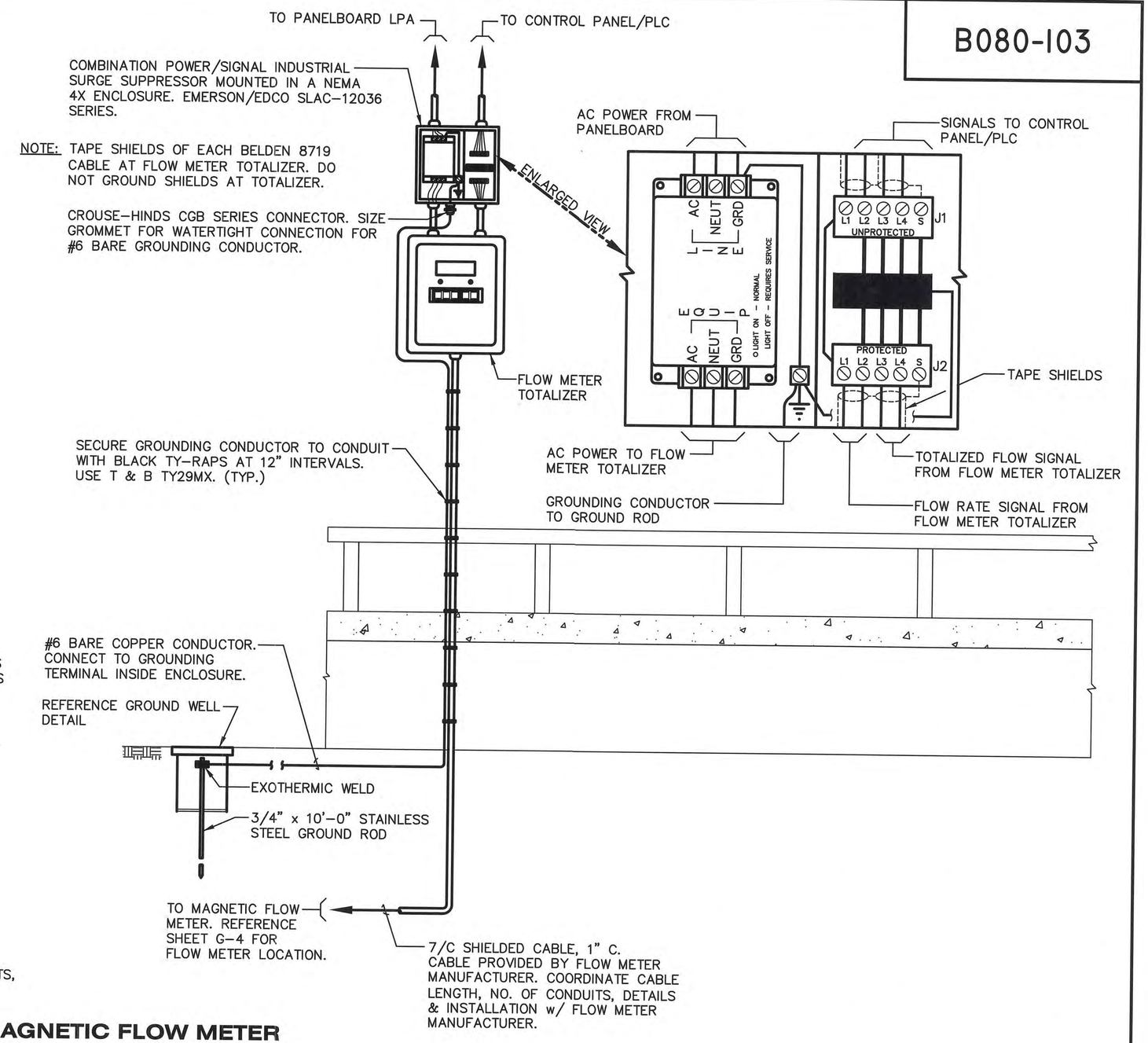

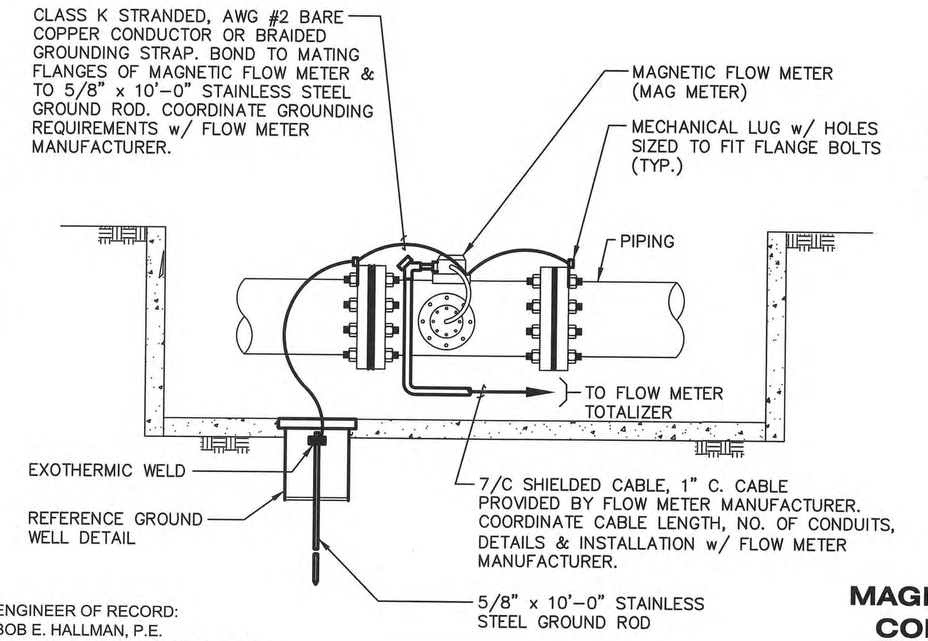

MAGNETIC FLOW METER CONNECTION DETAIL

ENGINEER OF RECORD:
BOB E. HALLMAN, P.E.
FLORIDA REGISTRATION NO. 20761

Engineering Design Technologies Corp.
P.O. Box 152403
Tampa, FL 33684-2403
813.289.8080
813.282.9184 FAX
engineering@edt1.com
Certificate of Authorization Number: 4795

CITY of TAMPA
WASTEWATER DEPARTMENT

KRAUSE PS REHABILITATION

MAGNETIC FLOW METER CONNECTION DETAIL

NO.	DATE	REVISIONS

DRAWN: RWB
DESIGN: STK
QC: BEH
DATE: 05/01/14

SHEET E-42

B080-104

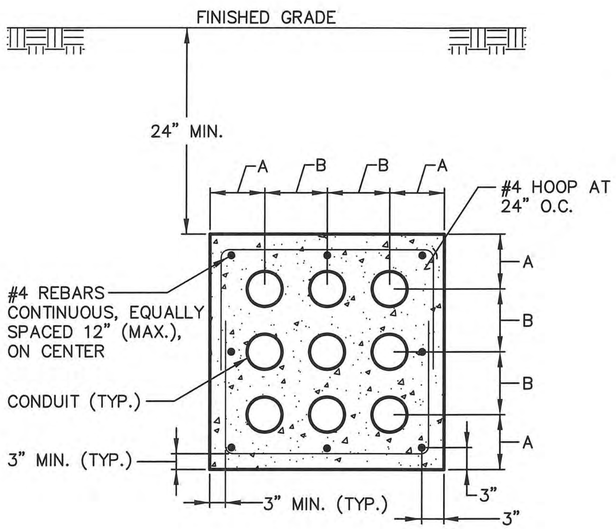

1 DUCT BANK DETAIL

DUCT BANK CONDUIT SPACING DIMENSIONS										
CONDUIT SIZE	DIMENSION A	CONDUIT SIZE								
		3/4"	1"	1 1/4"	1 1/2"	2"	2 1/2"	3"	3 1/2"	4"
		DIMENSION B								
3/4"	3 5/8"	3 1/8"	3 1/4"	3 3/8"	3 1/2"	3 3/4"	4"	4 3/8"	4 5/8"	4 7/8"
1"	3 3/4"	3 1/4"	3 3/8"	3 1/2"	3 5/8"	3 7/8"	4 1/4"	4 1/2"	4 3/4"	5"
1 1/4"	3 7/8"	3 3/8"	3 1/2"	3 3/4"	3 7/8"	4 1/8"	4 3/8"	4 5/8"	4 7/8"	5 1/8"
1 1/2"	4"	3 1/2"	3 5/8"	3 7/8"	4"	4 1/4"	4 1/2"	4 3/4"	5"	5 1/4"
2"	4 1/4"	3 3/4"	3 7/8"	4 1/8"	4 1/4"	4 3/8"	4 5/8"	5"	5 1/4"	5 1/2"
2 1/2"	4 1/2"	4"	4 1/8"	4 3/8"	4 1/2"	4 5/8"	4 7/8"	5 1/4"	5 1/2"	5 3/4"
3"	4 3/4"	4 3/8"	4 1/2"	4 5/8"	4 3/4"	5"	5 1/4"	5 1/2"	5 3/4"	6"
3 1/2"	5"	4 5/8"	4 3/4"	4 7/8"	5"	5 1/4"	5 1/2"	5 3/4"	6"	6 1/4"
4"	5 1/4"	4 7/8"	5"	5 1/8"	5 1/4"	5 1/2"	5 3/4"	6"	6 1/4"	6 1/2"

NOTES:

1. CONCRETE SHALL BE 3000 PSI. MINIMUM COMPRESSION STRENGTH.
2. TOP OF DUCT BANK SHALL BE DYED RED.
3. TOP OF DUCT BANK SHALL BE 24" BELOW FINISHED GRADE.
4. 4" CONDUIT BEND RADIUS SHALL BE A MINIMUM OF 48".
5. ALL EMPTY CONDUITS SHALL INCLUDE A PULL WIRE AND SHALL BE CAPPED.
6. DUCT BANKS MAY BE RE-ARRANGED FOR CONVENIENCE OF EGRESS.
7. REFERENCE ELECTRICAL DRAWINGS FOR CONDUIT SIZE.
8. THIS DETAIL IS FOR LAYOUT PURPOSES ONLY. FOR THE ACTUAL NUMBER OF CONDUITS & FEEDERS SEE PLAN DRAWINGS.

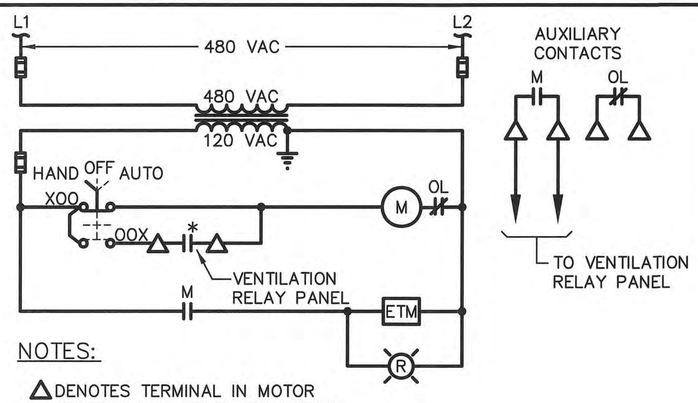

NOTES:

△ DENOTES TERMINAL IN MOTOR STARTER FOR FIELD CONNECTION.

* DEVICE LOCATED REMOTE FROM STARTER

4 SUPPLY FAN - MOTOR CONTROL CIRCUIT DIAGRAM

(TYPICAL FOR SF-1 & SF-2)

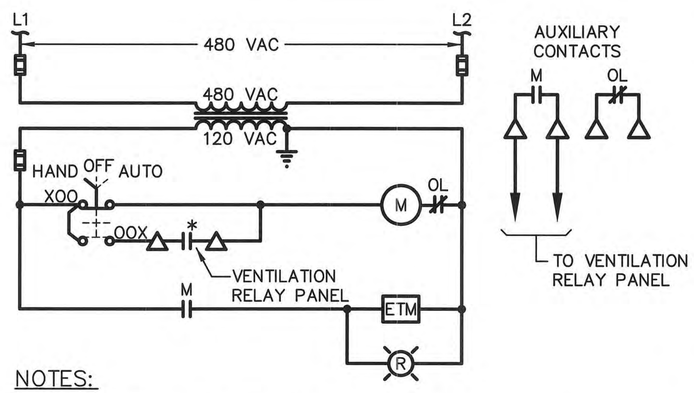

NOTES:

△ DENOTES TERMINAL IN MOTOR STARTER FOR FIELD CONNECTION.

* DEVICE LOCATED REMOTE FROM STARTER

5 EXHAUST FAN - MOTOR CONTROL CIRCUIT DIAGRAM

(TYPICAL FOR EF-1, EF-2 & EF-3)

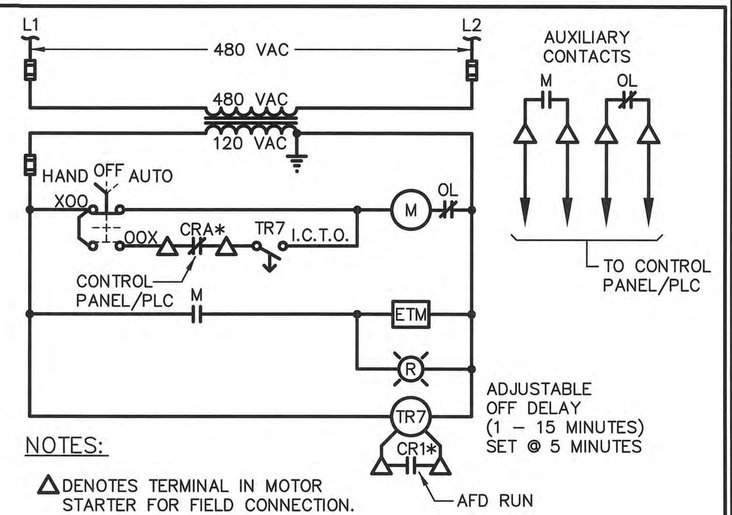

NOTES:

△ DENOTES TERMINAL IN MOTOR STARTER FOR FIELD CONNECTION.

* DEVICE LOCATED REMOTE FROM STARTER

6 PUMP BLOWER - MOTOR CONTROL CIRCUIT DIAGRAM

(TYPICAL FOR PUMP NO. 1 – PUMP NO.4 BLOWERS)

ENGINEER OF RECORD:
BOB E. HALLMAN, P.E.
FLORIDA REGISTRATION NO. 20761

Engineering Design Technologies Corp.
P.O. Box 152403
Tampa, FL 33684-2403
813.289.8080
813.282.9184 FAX
engineering@edt1.com
Certificate of Authorization Number: 4795

CITY of TAMPA
WASTEWATER DEPARTMENT

KRAUSE PS REHABILITATION

ELECTRICAL DETAILS

NO.	DATE	REVISIONS

DRAWN: RWB
DESIGN: STK
QC: BEH
DATE: 05/01/14

SHEET E-43

B080-105

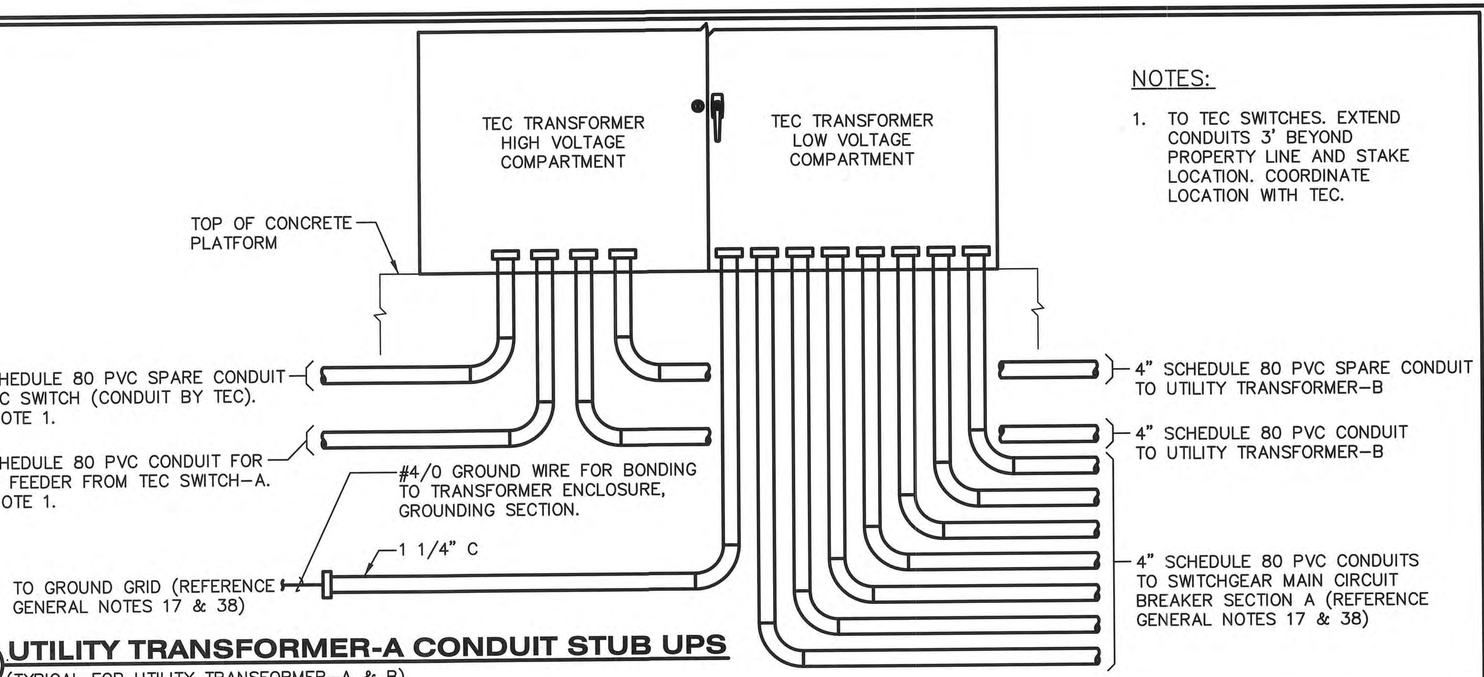

NOTES:

1. TO TEC SWITCHES. EXTEND CONDUITS 3' BEYOND PROPERTY LINE AND STAKE LOCATION. COORDINATE LOCATION WITH TEC.

1 UTILITY TRANSFORMER-A CONDUIT STUB UPS

(TYPICAL FOR UTILITY TRANSFORMER-A & B)

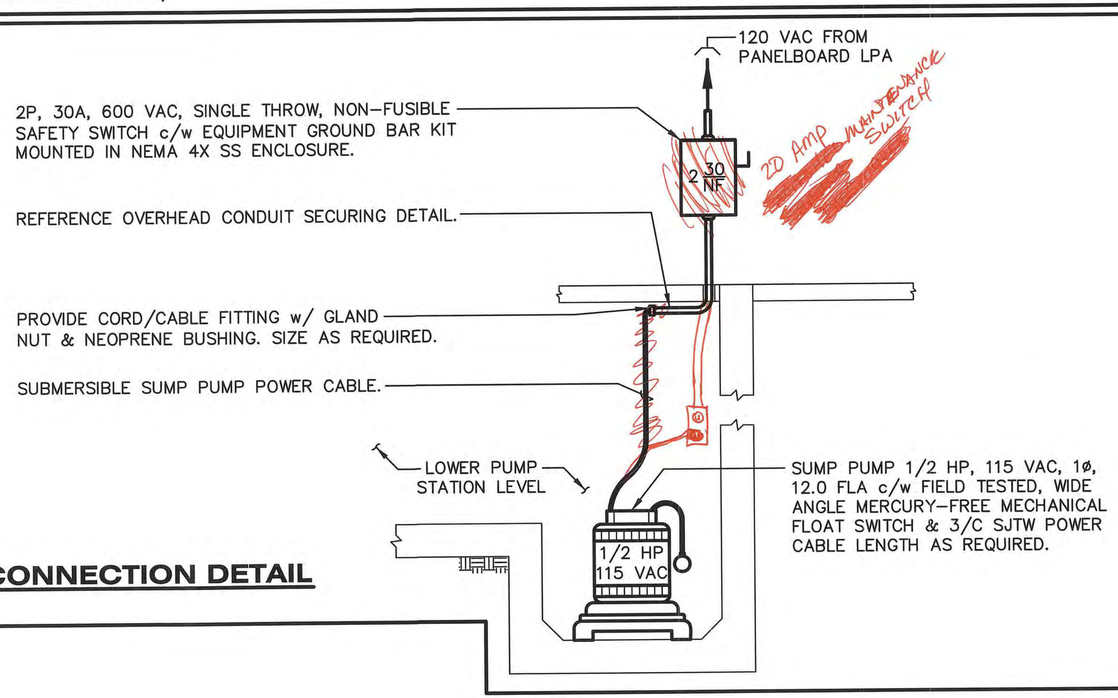

4 SUMP PUMP CONNECTION DETAIL

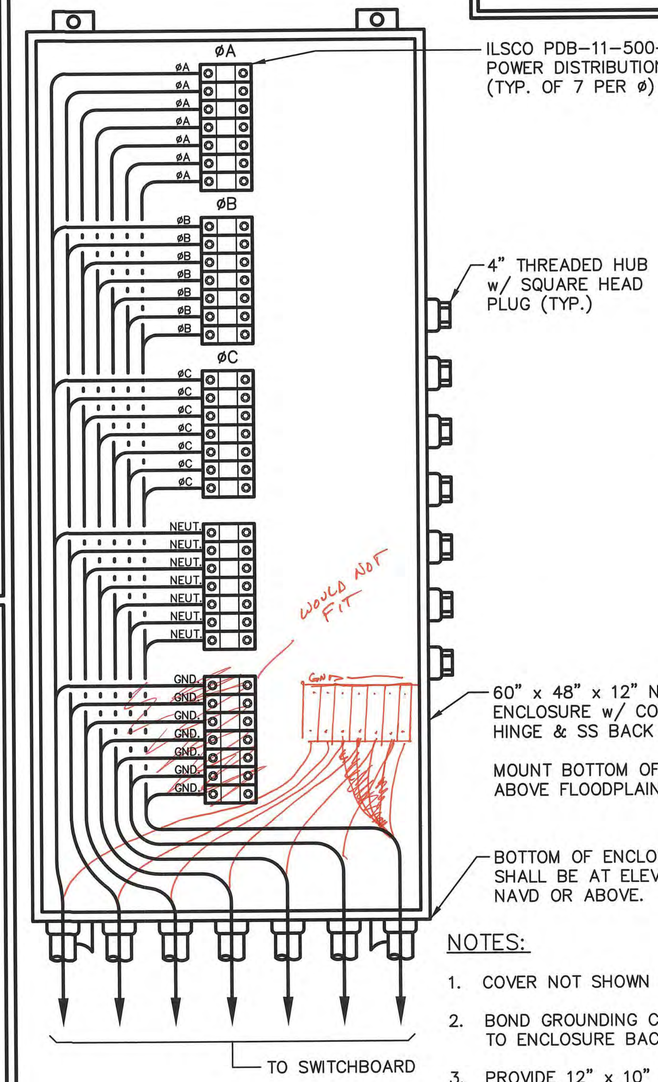

NOTES:

1. COVER NOT SHOWN FOR CLARITY.
2. BOND GROUNDING CONDUCTORS TO ENCLOSURE BACK PANEL.
3. PROVIDE 12" x 10" PHENOLIC SIGN ON ENCLOSURE COVER TO READ "GENERATOR CONNECTION" SIGN SHALL HAVE A BLACK BACKGROUND w/ WHITE LETTERS 3/8" HIGH.

6 TYPICAL GENERATOR TERMINAL BOX DETAIL

TYPICAL FOR BUS A AND BUS B GENERATORS

ENGINEER OF RECORD:
BOB E. HALLMAN, P.E.
FLORIDA REGISTRATION NO. 20761

EDT
Engineering Design Technologies Corp.
P.O. Box 152403
Tampa, FL 33684-2403
813.289.8080
813.282.9184 FAX
engineering@edt1.com
Certificate of Authorization Number: 4795

CITY of TAMPA
WASTEWATER DEPARTMENT

KRAUSE PS REHABILITATION

ELECTRICAL DETAILS

NO.	DATE	REVISIONS

DRAWN: RWB
DESIGN: STK
QC: BEH
DATE: 05/01/14

SHEET E-44

B080-106

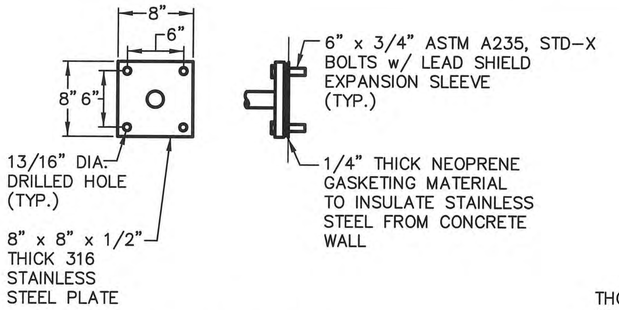

ANCHOR PLATE DETAIL

NOTES:

1. ALL SHAPES SHALL BE FABRICATED OF 316 STAINLESS STEEL.
2. ALL JOINTS SHALL BE WELDED.
3. COORDINATE FLOAT ACTIVATION ELEVATIONS WITH CITY.

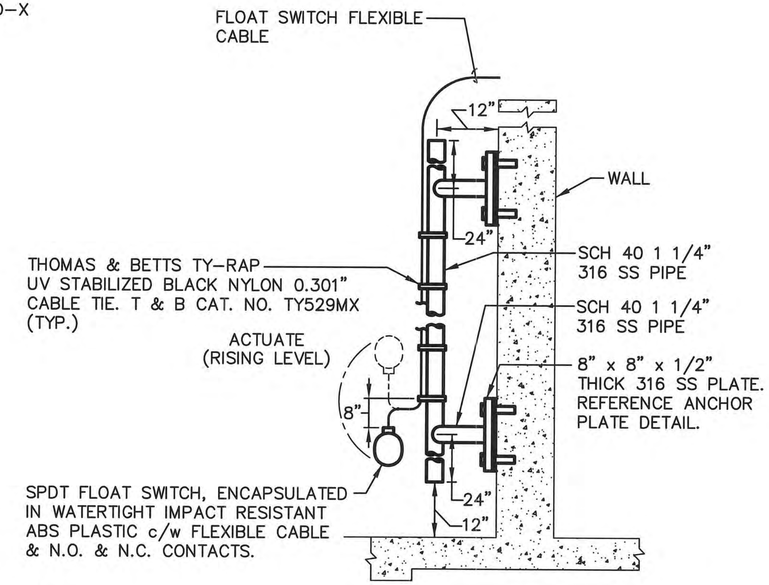

1 FLOAT SWITCH MOUNTING DETAIL

(TYP. FOR PUMP STATION LOWER LEVEL FLOAT SWITCHES & WET WELL FLOAT SWITCH)

3

NOTES:

1. COVER NOT SHOWN FOR CLARITY.
2. BOND GROUNDING CONDUCTORS TO ENCLOSURE BACK PANEL.
3. ALL CONDUCTORS AND ASSOCIATED TERMINALS THAT ARE PART OF THE INTRINSICALLY SAFE CIRCUIT SHALL BE CLEARLY IDENTIFIED WITH PERMANENTLY AFFIXED LABELS READING "INTRINSIC SAFETY WIRING".
4. LIGHT BLUE COLORED WIRING INSULATION SHALL BE RESERVED FOR INTRINSICALLY SAFE WIRING.
5. INTRINSICALLY SAFE WIRING AND TERMINALS SHALL BE SEPARATED FROM OTHER WIRING BY NOT LESS THAN 2".

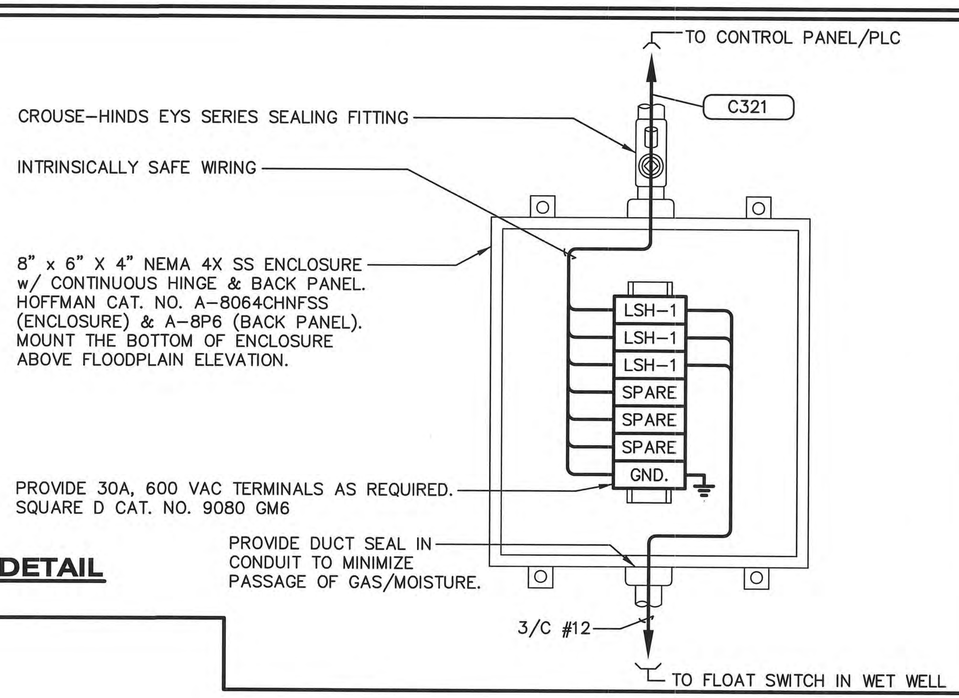

4 FLOAT SWITCH TERMINAL BOX DETAIL

6

ENGINEER OF RECORD:
BOB E. HALLMAN, P.E.
FLORIDA REGISTRATION NO. 20761

Engineering Design Technologies Corp.
P.O. Box 152403
Tampa, FL 33684-2403
813.289.8080
813.282.9184 FAX
engineering@edt1.com
Certificate of Authorization Number: 4795

CITY of TAMPA
WASTEWATER DEPARTMENT

KRAUSE PS REHABILITATION

ELECTRICAL DETAILS

NO.	DATE	REVISIONS

DRAWN: RWB
DESIGN: STK
QC: BEH
DATE: 05/01/14

SHEET E-45

B080-107

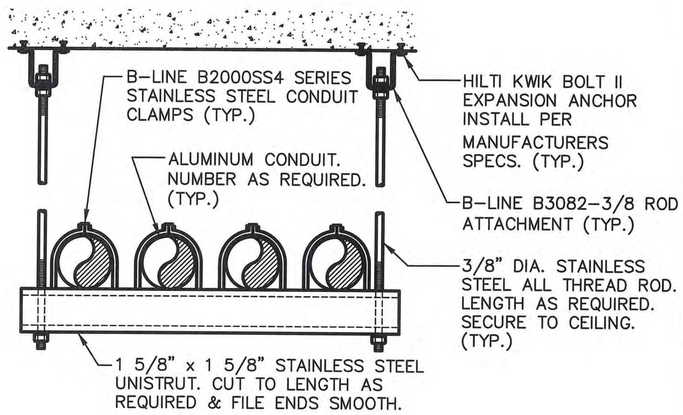

1 OVERHEAD CONDUIT SECURING DETAIL

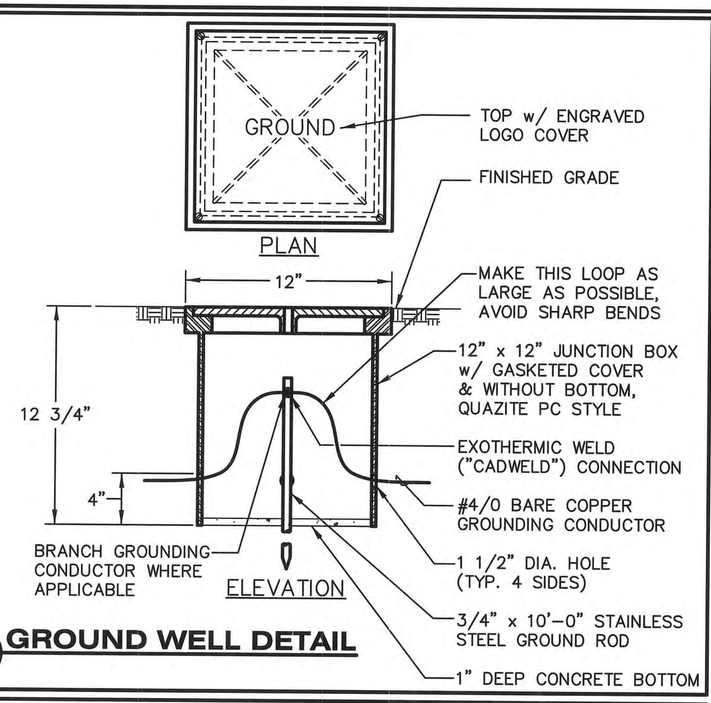

2 GROUND WELL DETAIL

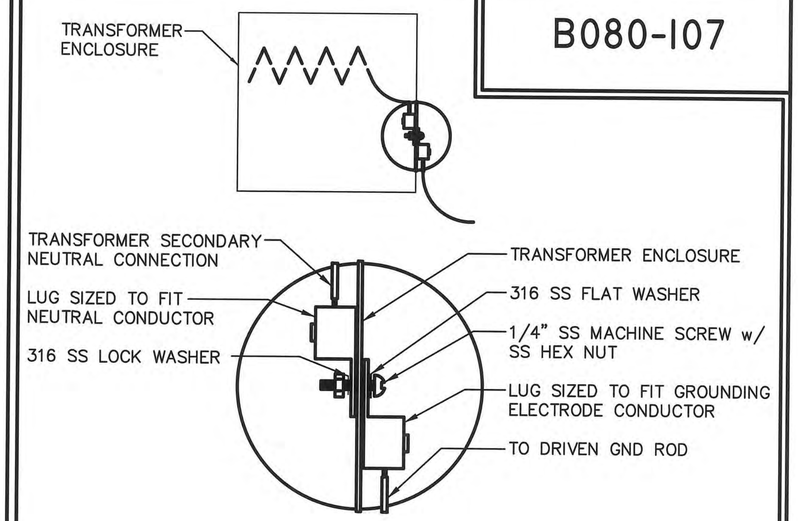

3 45 KVA TRANSFORMER NEUTRAL GROUNDING DETAIL

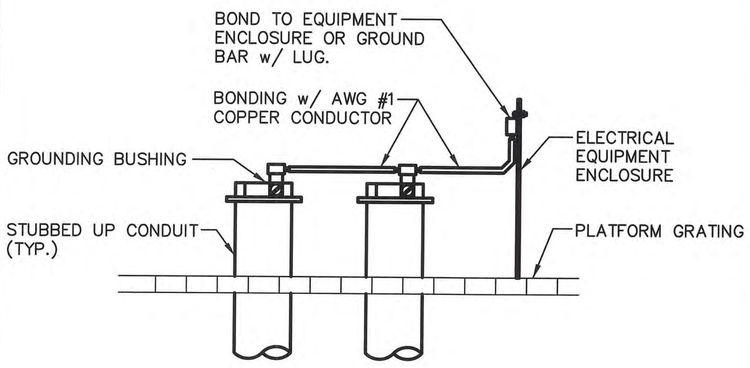

4 CONDUIT BONDING CONNECTIONS ON STUBBED UP CONDUITS BELOW EQUIPMENT

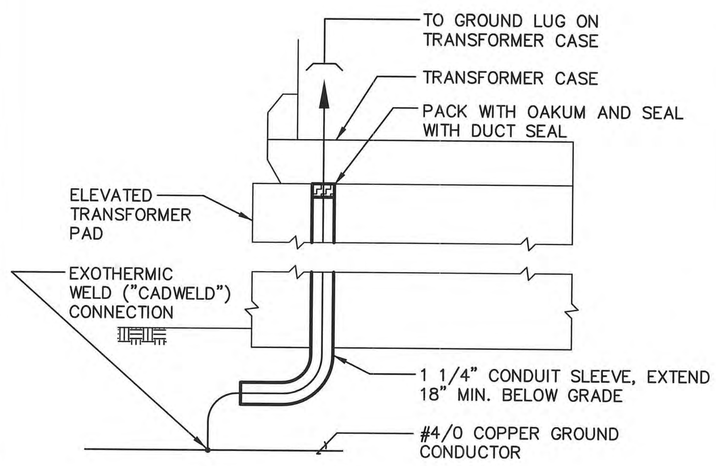

5 GROUND LOOP CONNECTION TO UTILITY TRANSFORMER CASE

(TYPICAL FOR UTILITY TRANSFORMER – A & B)

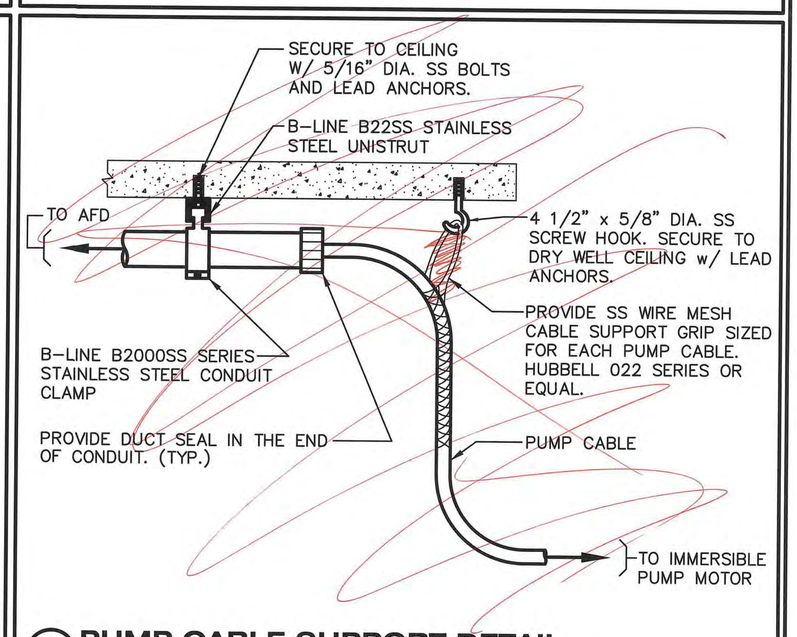

6 PUMP CABLE SUPPORT DETAIL

ENGINEER OF RECORD:
BOB E. HALLMAN, P.E.
FLORIDA REGISTRATION NO. 20761

Engineering Design Technologies Corp.
P.O. Box 152403
Tampa, FL 33684-2403
813.289.8080
813.282.9184 FAX
engineering@edt1.com
Certificate of Authorization Number: 4795

CITY of TAMPA
WASTEWATER DEPARTMENT

KRAUSE PS REHABILITATION

ELECTRICAL DETAILS

NO.	DATE	REVISIONS

DRAWN: RWB
DESIGN: STK
QC: BEH
DATE: 05/01/14

SHEET E-46

B080-108

PANELBOARD SCHEDULE PANEL "LPA"

bus amps A	B	C	LOAD	poles	amps		bus ABC		poles	amps	LOAD	bus amps A	B	C
7			CONTROL PANEL/PLC	1	20	1		2	1	15	FLOW METER TOTALIZER	5		
	4		BUBBLER PANEL	1	15	3		4	3	20	TRAVELING BRIDGE CRANE		12	
		5	LOWER LEVEL RECEPTACLES*	1	20	5			⊥	⊥	⊥			12
3			LOWER LEVEL RECEPTACLES*	1	20	7			⊥	⊥	⊥	12		
	2		LOWER LEVEL LIGHTING*	1	20	9		10	1	20	WET WELL UPPER LEVEL LIGHTING		1	
		2	LOWER LEVEL LIGHTING*	1	20	11		12	1	20	WET WELL LOWER LEVEL LIGHTING*			1
2			LOWER LEVEL LIGHTING*	1	20	13		14	1	20	EXTERIOR LIGHTING	4		
	9		HIGH BAY PUMP LIGHTING	1	20	15		16	1	20	OFFICE A/C RECEPTACLE		10	
		5	UPPER LEVEL LIGHTING	1	20	17		18	1	15	VENTILATION RELAY PANEL			2
9			UPPER LEVEL RECEPTACLES	1	20	19		20	1	20	SUMP PUMP	12		
	9		UPPER LEVEL RECEPTACLES	1	20	21		22	1	20	HIGH BAY LIGHTING		8	
		2	AIR DRYER	1	15	23		24	2	30	CIRCUIT BREAKER UPS–MODULE A			21
									⊥	⊥	⊥	21		
								28	2	30	CIRCUIT BREAKER UPS–MODULE B		21	
									⊥	⊥	⊥			21
								32	2	30	CIRCUIT BREAKER UPS–MODULE C	21		
									⊥	⊥	⊥		21	
			SPARE	1	20				1	20	SPARE			
			SPARE	1	20				1	20	SPARE			

RATED VOLTAGE: 120/208 VAC, 3ø, 4W	BRANCH POLES: 42
RATED AMPS: 225	CABINET: SURFACE
FULL NEUTRAL BUS / GROUND BUS / HINGED DOOR	KEYED DOOR LATCH / 3P, 175A MAIN BREAKER
CIRCUIT BREAKER (BOLT–ON) BRANCH DEVICES	FEED IS TO BE TOP
ALL BRKRS. MUST BE RATED TO INTERRUPT A SHORT CIRCUIT I_{sc} OF 22,000 AMPS SYMMETRICAL	
APPROVED MANUFACTURERS: SIEMENS, SQUARE D	MAIN LUGS: 1 SET; SIZE: #2/0 AWG/CU
TOTAL AMPS: BUS A 96, BUS B 97, BUS C 71, CONNECTED KVA 31.7, DEMAND KVA 31.7	

* PROVIDE GFCI CIRCUIT BREAKER FOR LIGHTING & RECEPTACLE CIRCUITS LOCATED BELOW THE FLOODPLAIN.

CIRCUIT DIRECTORY

PANEL LPA 175A MCB — 120/208 VOLT — DATE 5-26-1916 — 3 PHASE 4 WIRE

CONTROL PANEL PLC	20	1	2	20	FLOW METER TOTALIZER
BUBBLER PANEL	15	3	4	20	BRIDGE CRANE
LOWER LEVEL RECEPTS	20	5	6		
LOWER LEVEL RECEPTS	20	7	8		
LOWER LEVEL LIGHTS	20	9	10	20	WET WELL UPPER LEVEL LTS
LOWER LEVEL LIGHTS	20	11	12	20	WET WELL LOWER LEVEL LTS
LOWER LEVEL LIGHTS	20	13	14	20	EXTERIOR LIGHTING
SUMP PUMP	20	15	16	20	HIGH BAY LIGHTING
UPPER LEVEL LIGHTS	20	17	18	20	HIGH BAY PUMP LIGHTING
UPPER LEVEL RECEPTS	20	19	20	30	CIRCUIT BREAKER UPS
COMPRESSOR/BATH LGTS	20	21	22		MODULE-A
AIR DRYER	15	23	24	30	CIRCUIT BREAKER UPS
UPPER LEVEL RECEPTS	20	25	26		MODULE-B
SPACE		27	28	30	CIRCUIT BREAKER UPS
SPACE		29	30		MODULE-C
SPACE		31	32	20	SPARE
SPACE		33	34		SPACE
SPACE		35	36		SPACE
SAPCE		37	38		SPACE
SPARE	20	39	40	20	SPARE
SPARE	20	41	42	20	SPARE

ENGINEER OF RECORD:
BOB E. HALLMAN, P.E.
FLORIDA REGISTRATION NO. 20761

EDT Engineering Design Technologies Corp.
P.O. Box 152403
Tampa, FL 33684-2403
813.289.8080
813.282.9184 FAX
engineering@edt1.com
Certificate of Authorization Number: 4795

CITY of TAMPA
WASTEWATER DEPARTMENT

KRAUSE PS REHABILITATION

ELECTRICAL PANELBOARD SCHEDULE

NO.	DATE	REVISIONS

DRAWN: RWB
DESIGN: STK
QC: BEH
DATE: 05/01/14

SHEET E-47

B080-109

LUMINAIRE SCHEDULE

MARK	WATTS	LAMP	VOLTS	DESCRIPTION	MOUNTING	REMARKS
F1	56	LED	120	40" LED IN AN EPOXY COATED COPPER-FREE ALUMINUM HOUSING w/ DIFFUSED LENS. CROUSE-HINDS CAT. NO. LL48-60W-765/-F-IN	CEILING MOUNT	
F2	169	LED	120	18", HIGH BAY LED FIXTURE w/ 72 HIGH OUTPUT LEDS MOUNTED IN A RUGGED CAST ALUMINUM GREY HOUSING w/ HINGE AND LATCH MOUNTING SYSTEM. HUBBELL CAT. NO. HBL-72-1-A-2-5K-W-070-ND-GR	MOUNT ON 3' PENDANT. BOTTOM OF FIXTURE SHALL NOT INTERFERE w/ TRAVELING BRIDGE CRANE	
F3	36	LED	120	LED LIGHTING FIXTURE MOUNTED IN AN EPOXY POWDER COATED, COPPER-FREE, ALUMINUM HOUSING w/ GLOBE & GUARD, SUITABLE FOR USE IN CLASS I, DIVISION 1 ENVIRONMENTS. CROUSE-HINDS CAT. NO. EVLEDBX2C701	WALL MOUNT 8'-0" AFF	PROVIDE GLOBE & GUARD
F4	60	LED	120	9", LED FIXTURE, IDA COMPLIANT, BRONZE, DIE CAST ALUMINUM HOUSING w/ POLYCARBONATE SHIELD & PHOTO CONTROL BUTTON. HUBBELL CAT. NO. LMC-18LU-5K-1-PC1-LMC-SPC	BUILDING EXTERIOR. BOTTOM OF FIXTURE SHALL BE 10'-0" ABOVE FINISHED GRADE	IDA (DARK-SKY) COMPLIANT
F5	4	LED	120	EMERGENCY LIGHTING FIXTURE w/ 2 LED LAMP HEADS & MAINTENANCE FREE NIMH BATTERY, 90 MINUTE RATED OUTPUT. DUAL-LIGHT CAT. NO. EV4D-I-02L	WALL MOUNT 8'-0" AFF OR 8'-0" ABOVE STRUCTURAL PLATFORM	
F6	9	LED	120	EMERGENCY LIGHTING FIXTURE w/ 2 LED LAMP HEADS, STAINLESS STEEL HOUSING & NICAD BATTERY, SUITABLE FOR USE IN A CLASS I, DIVISION 1 ENVIRONMENT. CROUSE-HINDS CAT. NO. N2LPS12222SS	WALL MOUNT 8'-0" AFF	
X1	15	LED	120	EXIT LIGHTING FIXTURE w/ LED LAMPS, RED FACE, UNIVERSAL MOUNT & MAINTENANCE FREE NICKEL CADMIUM BATTERY. COMPASS LIGHTING. CAT. NO. CER.	ABOVE DOOR	

ENGINEER OF RECORD:
BOB E. HALLMAN, P.E.
FLORIDA REGISTRATION NO. 20761

Engineering Design Technologies Corp.
P.O. Box 152403
Tampa, FL 33684-2403
813.289.8080
813.282.9184 FAX
engineering@edt1.com
Certificate of Authorization Number: 4795

CITY of TAMPA
WASTEWATER DEPARTMENT

KRAUSE PS REHABILITATION

LUMINAIRE SCHEDULE

NO.	DATE	REVISIONS

DRAWN: RWB
DESIGN: STK
QC: BEH
DATE: 05/01/14

SHEET E-48

B080-110

PROPOSED CONDUIT / CONDUCTOR SCHEDULE

CONDUIT NO.	COND. SIZE	NO. WIRES	NO. SEALS	WIRE SIZE	FROM	TO	REMARKS
H001A	6"	1		PULL WIRE	TEC SWITCH–A	TEC TRANSFORMER–A	EXTEND CONDUIT 3' BEYOND PROPERTY LINE AND STUB UP. COORDINATE REQUIREMENTS w/ TEC.
H001B	6"	1		PULL WIRE	TEC SWITCH–A	TEC TRANSFORMER–A	EXTEND CONDUIT 3' BEYOND PROPERTY LINE AND STUB UP. COORDINATE REQUIREMENTS w/ TEC.
H002A	6"	1		PULL WIRE	TEC SWITCH–B	TEC TRANSFORMER–B	EXTEND CONDUIT 3' BEYOND PROPERTY LINE AND STUB UP. COORDINATE REQUIREMENTS w/ TEC.
H002B	6"	1		PULL WIRE	TEC SWITCH–B	TEC TRANSFORMER–B	EXTEND CONDUIT 3' BEYOND PROPERTY LINE AND STUB UP. COORDINATE REQUIREMENTS w/ TEC.
H003A	4"	1		PULL WIRE	TEC TRANSFORMER–A	TEC TRANSFORMER–B	COORDINATE REQUIREMENTS w/ TEC
H003B	4"	1		PULL WIRE	TEC TRANSFORMER–A	TEC TRANSFORMER–B	COORDINATE REQUIREMENTS w/ TEC
M100A	4"	3		500 KCMIL	TEC TRANSFORMER–A	SWITCHBOARD–KPS (BUS A)	COORDINATE TRANSFORMER CONNECTIONS w/ TEC
		1		250 KCMIL NEUT.			
M100B	4"	3		500 KCMIL	TEC TRANSFORMER–A	SWITCHBOARD–KPS (BUS A)	COORDINATE TRANSFORMER CONNECTIONS w/ TEC
		1		250 KCMIL NEUT.			
M100C	4"	3		500 KCMIL	TEC TRANSFORMER–A	SWITCHBOARD–KPS (BUS A)	COORDINATE TRANSFORMER CONNECTIONS w/ TEC
		1		250 KCMIL NEUT.			
M100D	4"	3		500 KCMIL	TEC TRANSFORMER–A	SWITCHBOARD–KPS (BUS A)	COORDINATE TRANSFORMER CONNECTIONS w/ TEC
		1		250 KCMIL NEUT.			
M100E	4"	3		500 KCMIL	TEC TRANSFORMER–A	SWITCHBOARD–KPS (BUS A)	COORDINATE TRANSFORMER CONNECTIONS w/ TEC
		1		250 KCMIL NEUT.			
M100F	4"	3		500 KCMIL	TEC TRANSFORMER–A	SWITCHBOARD–KPS (BUS A)	COORDINATE TRANSFORMER CONNECTIONS w/ TEC
		1		250 KCMIL NEUT.			
M100G	4"	3		500 KCMIL	TEC TRANSFORMER–A	SWITCHBOARD–KPS (BUS A)	COORDINATE TRANSFORMER CONNECTIONS w/ TEC
		1		250 KCMIL NEUT.			
M101A	4"	3		500 KCMIL	TEC TRANSFORMER–B	SWITCHBOARD–KPS (BUS B)	COORDINATE TRANSFORMER CONNECTIONS w/ TEC
		1		250 KCMIL NEUT.			
M101B	4"	3		500 KCMIL	TEC TRANSFORMER–B	SWITCHBOARD–KPS (BUS B)	COORDINATE TRANSFORMER CONNECTIONS w/ TEC
		1		250 KCMIL NEUT.			
M101C	4"	3		500 KCMIL	TEC TRANSFORMER–B	SWITCHBOARD–KPS (BUS B)	COORDINATE TRANSFORMER CONNECTIONS w/ TEC
		1		250 KCMIL NEUT.			
M101D	4"	3		500 KCMIL	TEC TRANSFORMER–B	SWITCHBOARD–KPS (BUS B)	COORDINATE TRANSFORMER CONNECTIONS w/ TEC
		1		250 KCMIL NEUT.			

ENGINEER OF RECORD:
BOB E. HALLMAN, P.E.
FLORIDA REGISTRATION NO. 20761

EDT
Engineering Design Technologies Corp.
P.O. Box 152403
Tampa, FL 33684-2403
813.289.8080
813.282.9184 FAX
engineering@edt1.com
Certificate of Authorization Number: 4795

CITY of TAMPA
WASTEWATER DEPARTMENT

KRAUSE PS REHABILITATION

CONDUIT SCHEDULE

NO.	DATE	REVISIONS

DRAWN: RWB
DESIGN: STK
QC: BEH
DATE: 05/01/14

SHEET E-49

B080-III

PROPOSED CONDUIT / CONDUCTOR SCHEDULE

CONDUIT NO.	COND. SIZE	NO. WIRES	NO. SEALS	WIRE SIZE	FROM	TO	REMARKS
M101E	4"	3		500 KCMIL	TEC TRANSFORMER-B	SWITCHBOARD-KPS (BUS B)	COORDINATE TRANSFORMER CONNECTIONS w/ TEC
		1		250 KCMIL NEUT.			
M101F	4"	3		500 KCMIL	TEC TRANSFORMER-B	SWITCHBOARD-KPS (BUS B)	COORDINATE TRANSFORMER CONNECTIONS w/ TEC
		1		250 KCMIL NEUT.			
M101G	4"	3		500 KCMIL	TEC TRANSFORMER-B	SWITCHBOARD-KPS (BUS B)	COORDINATE TRANSFORMER CONNECTIONS w/ TEC
		1		250 KCMIL NEUT.			
M102A	4"	3		500 KCMIL	GENERATOR BUS A TERMINAL BOX	SWITCHBOARD-KPS (BUS A)	FUTURE EMERGENCY GENERATOR A
		1		250 KCMIL NEUT.			
		1		400 KCMIL GND.			
M102B	4"	3		500 KCMIL	GENERATOR BUS A TERMINAL BOX	SWITCHBOARD-KPS (BUS A)	FUTURE EMERGENCY GENERATOR A
		1		250 KCMIL NEUT.			
		1		400 KCMIL GND.			
M102C	4"	3		500 KCMIL	GENERATOR BUS A TERMINAL BOX	SWITCHBOARD-KPS (BUS A)	FUTURE EMERGENCY GENERATOR A
		1		250 KCMIL NEUT.			
		1		400 KCMIL GND.			
M102D	4"	3		500 KCMIL	GENERATOR BUS A TERMINAL BOX	SWITCHBOARD-KPS (BUS A)	FUTURE EMERGENCY GENERATOR A
		1		250 KCMIL NEUT.			
		1		400 KCMIL GND.			
M102E	4"	3		500 KCMIL	GENERATOR BUS A TERMINAL BOX	SWITCHBOARD-KPS (BUS A)	FUTURE EMERGENCY GENERATOR A
		1		250 KCMIL NEUT.			
		1		400 KCMIL GND.			
M102F	4"	3		500 KCMIL	GENERATOR BUS A TERMINAL BOX	SWITCHBOARD-KPS (BUS A)	FUTURE EMERGENCY GENERATOR A
		1		250 KCMIL NEUT.			
		1		400 KCMIL GND.			
M102G	4"	3		500 KCMIL	GENERATOR BUS A TERMINAL BOX	SWITCHBOARD-KPS (BUS A)	FUTURE EMERGENCY GENERATOR A
		1		250 KCMIL NEUT.			
		1		400 KCMIL GND.			
M103A	4"	3		500 KCMIL	GENERATOR BUS B TERMINAL BOX	SWITCHBOARD-KPS (BUS B)	FUTURE EMERGENCY GENERATOR B
		1		250 KCMIL NEUT.			
		1		400 KCMIL GND.			
M103B	4"	3		500 KCMIL	GENERATOR BUS B TERMINAL BOX	SWITCHBOARD-KPS (BUS B)	FUTURE EMERGENCY GENERATOR B
		1		250 KCMIL NEUT.			
		1		400 KCMIL GND.			
M103C	4"	3		500 KCMIL	GENERATOR BUS B TERMINAL BOX	SWITCHBOARD-KPS (BUS B)	FUTURE EMERGENCY GENERATOR B
		1		250 KCMIL NEUT.			
		1		400 KCMIL GND.			
M103D	4"	3		500 KCMIL	GENERATOR BUS B TERMINAL BOX	SWITCHBOARD-KPS (BUS B)	FUTURE EMERGENCY GENERATOR B
		1		250 KCMIL NEUT.			
		1		400 KCMIL GND.			
M103E	4"	3		500 KCMIL	GENERATOR BUS B TERMINAL BOX	SWITCHBOARD-KPS (BUS B)	FUTURE EMERGENCY GENERATOR B
		1		250 KCMIL NEUT.			
		1		400 KCMIL GND.			
M103F	4"	3		500 KCMIL	GENERATOR BUS B TERMINAL BOX	SWITCHBOARD-KPS (BUS B)	FUTURE EMERGENCY GENERATOR B
		1		250 KCMIL NEUT.			
		1		400 KCMIL GND.			
M103G	4"	3		500 KCMIL	GENERATOR BUS B TERMINAL BOX	SWITCHBOARD-KPS (BUS B)	FUTURE EMERGENCY GENERATOR B
		1		250 KCMIL NEUT.			
		1		400 KCMIL GND.			
M104	1 1/4"	1		250 KCMIL	CB-KPS-A (SWITCHBOARD-KPS)	SERVICE GROUND SYSTEM	GROUNDING ELECTRODE CONDUCTOR

ENGINEER OF RECORD:
BOB E. HALLMAN, P.E.
FLORIDA REGISTRATION NO. 20761

Engineering Design Technologies Corp.
P.O. Box 152403
Tampa, FL 33684-2403
813.289.8080
813.282.9184 FAX
engineering@edt1.com
Certificate of Authorization Number: 4795

CITY of TAMPA
WASTEWATER DEPARTMENT

KRAUSE PS REHABILITATION

CONDUIT SCHEDULE

NO.	DATE	REVISIONS

DRAWN: RWB
DESIGN: STK
QC: BEH
DATE: 05/01/14

SHEET E-50

B080-112

PROPOSED CONDUIT / CONDUCTOR SCHEDULE

CONDUIT NO.	COND. SIZE	NO. WIRES	NO. SEALS	WIRE SIZE	FROM	TO	REMARKS
M105	1 1/4"	1		250 KCMIL	CB-KPS-B (SWITCHBOARD-KPS)	SERVICE GROUND SYSTEM	GROUNDING ELECTRODE CONDUCTOR
M106A	4"	3		350 KCMIL	SWITCHBOARD-KPS (BUS A)	MCC-KPS (BUS A)	MCC BUS A POWER
		1		#1/0 GND.			
M106B	4"	3		350 KCMIL	SWITCHBOARD-KPS (BUS A)	MCC-KPS (BUS A)	MCC BUS A POWER
		1		#1/0 GND.			
M107A	4"	3		350 KCMIL	SWITCHBOARD-KPS (BUS B)	MCC-KPS (BUS B)	MCC BUS B POWER
		1		#1/0 GND.			
M107B	4"	3		350 KCMIL	SWITCHBOARD-KPS (BUS B)	MCC-KPS (BUS B)	MCC BUS B POWER
		1		#1/0 GND.			
M108A	4"	3		500 KCMIL	SWITCHBOARD-KPS (BUS A)	PUMP NO. 1 AFD	PUMP NO. 1 AFD POWER
		1		#2/0 GND.			
M108B	4"	3		500 KCMIL	SWITCHBOARD-KPS (BUS A)	PUMP NO. 1 AFD	PUMP NO. 1 AFD POWER
		1		#2/0 GND.			
M109A	4"	1		4/C 250 KCMIL	PUMP NO. 1 AFD	PUMP NO. 1	PUMP NO. 1 POWER. CABLE PROVIDED BY PUMP SUPPLIER.
M109B	4"	1		4/C 250 KCMIL	PUMP NO. 1 AFD	PUMP NO. 1	PUMP NO. 1 POWER. CABLE PROVIDED BY PUMP SUPPLIER.
M109C	4"	1		4/C 250 KCMIL	PUMP NO. 1 AFD	PUMP NO. 1	PUMP NO. 1 POWER. CABLE PROVIDED BY PUMP SUPPLIER.
M110A	4"	3		500 KCMIL	SWITCHBOARD-KPS (BUS A)	PUMP NO. 2 AFD	PUMP NO. 2 AFD POWER
		1		#2/0 GND.			
M110B	4"	3		500 KCMIL	SWITCHBOARD-KPS (BUS A)	PUMP NO. 2 AFD	PUMP NO. 2 AFD POWER
		1		#2/0 GND.			
M111A	4"	1		4/C 250 KCMIL	PUMP NO. 2 AFD	PUMP NO. 2	PUMP NO. 2 POWER. CABLE PROVIDED BY PUMP SUPPLIER.
M111B	4"	1		4/C 250 KCMIL	PUMP NO. 2 AFD	PUMP NO. 2	PUMP NO. 2 POWER. CABLE PROVIDED BY PUMP SUPPLIER.
M111C	4"	1		4/C 250 KCMIL	PUMP NO. 2 AFD	PUMP NO. 2	PUMP NO. 2 POWER. CABLE PROVIDED BY PUMP SUPPLIER.
M112A	4"	3		500 KCMIL	SWITCHBOARD-KPS (BUS B)	PUMP NO. 3 AFD	PUMP NO. 3 AFD POWER
		1		#2/0 GND.			
M112B	4"	3		500 KCMIL	SWITCHBOARD-KPS (BUS B)	PUMP NO. 3 AFD	PUMP NO. 3 AFD POWER
		1		#2/0 GND.			
M113A	4"	1		4/C 250 KCMIL	PUMP NO. 3 AFD	PUMP NO. 3	PUMP NO. 3 POWER. CABLE PROVIDED BY PUMP SUPPLIER.

ENGINEER OF RECORD:
BOB E. HALLMAN, P.E.
FLORIDA REGISTRATION NO. 20761

Engineering Design Technologies Corp.
P.O. Box 152403
Tampa, FL 33684-2403
813.289.8080
813.282.9184 FAX
engineering@edt1.com
Certificate of Authorization Number: 4795

CITY of TAMPA
WASTEWATER DEPARTMENT

KRAUSE PS REHABILITATION

CONDUIT SCHEDULE

NO.	DATE	REVISIONS

DRAWN: RWB
DESIGN: STK
QC: BEH
DATE: 05/01/14

SHEET E-51

B080-113

PROPOSED CONDUIT / CONDUCTOR SCHEDULE

CONDUIT NO.	COND. SIZE	NO. WIRES	NO. SEALS	WIRE SIZE	FROM	TO	REMARKS
M113B	4"	1		4/C 250 KCMIL	PUMP NO. 3 AFD	PUMP NO. 3	PUMP NO. 3 POWER. CABLE PROVIDED BY PUMP SUPPLIER.
M113C	4"	1		4/C 250 KCMIL	PUMP NO. 3 AFD	PUMP NO. 3	PUMP NO. 3 POWER. CABLE PROVIDED BY PUMP SUPPLIER.
M114A	4"	3		500 KCMIL	SWITCHBOARD-KPS (BUS B)	PUMP NO. 4 AFD	PUMP NO. 4 AFD POWER
		1		#2/0 GND.			
M114B	4"	3		500 KCMIL	SWITCHBOARD-KPS (BUS B)	PUMP NO. 4 AFD	PUMP NO. 4 AFD POWER
		1		#2/0 GND.			
M115A	4"	1		4/C 250 KCMIL	PUMP NO. 4 AFD	PUMP NO. 4	PUMP NO. 4 POWER. CABLE PROVIDED BY PUMP SUPPLIER.
M115B	4"	1		4/C 250 KCMIL	PUMP NO. 4 AFD	PUMP NO. 4	PUMP NO. 4 POWER. CABLE PROVIDED BY PUMP SUPPLIER.
M115C	4"	1		4/C 250 KCMIL	PUMP NO. 4 AFD	PUMP NO. 4	PUMP NO. 4 POWER. CABLE PROVIDED BY PUMP SUPPLIER.
M116	1"	3		#6	MCC-KPS (BUS A)	AUTOMATIC TRANSFER SWITCH (NORMAL)	TRANSFORMER T1 POWER
		1		#8 GND.			
M117	1"	3		#6	MCC-KPS (BUS B)	AUTOMATIC TRANSFER SWITCH (ALTERNATE)	TRANSFORMER T1 POWER
		1		#8 GND.			
M118	1"	3		#6	AUTOMATIC TRANSFER SWITCH	TRANSFORMER T1	TRANSFORMER T1 POWER
		1		#8 GND.			
M119	2"	1		PULL WIRE	TEC TRANSFORMER-A	TEC METER (TRANSFORMER-A)	COORDINATE REQUIREMENTS w/ TEC
M120	2"	1		PULL WIRE	TEC TRANSFORMER-B	TEC METER (TRANSFORMER-B)	COORDINATE REQUIREMENTS w/ TEC
M121	3/4"	3		#10	MCC-KPS	VACUUM PUMP VP-1 CONTROL PANEL	VACUUM PUMP VP-1 POWER
		1		#10 GND.			
M122	1 1/4"	2		4/C #10	MCC-KPS	JUNCTION BOX	PUMP NO. 1 MOV & PUMP NO. 3 MOV POWER. SUBMERSIBLE CABLES.
M123	1"	1		4/C #10	JUNCTION BOX	PUMP 3 MOV	PUMP NO. 3 MOV POWER. SUBMERSIBLE CABLE.
M124	1"	1		4/C #10	JUNCTION BOX	PUMP 1 MOV	PUMP NO. 1 MOV POWER. SUBMERSIBLE CABLE.
M125	1 1/4"	2		4/C #10	MCC-KPS	JUNCTION BOX	PUMP NO. 2 MOV & PUMP NO. 4 MOV POWER. SUBMERSIBLE CABLES.
M126	1"	1		4/C #10	JUNCTION BOX	PUMP 4 MOV	PUMP NO. 4 MOV POWER. SUBMERSIBLE CABLE.

ENGINEER OF RECORD:
BOB E. HALLMAN, P.E.
FLORIDA REGISTRATION NO. 20761

Engineering Design Technologies Corp.
P.O. Box 152403
Tampa, FL 33684-2403
813.289.8080
813.282.9184 FAX
engineering@edt1.com
Certificate of Authorization Number: 4795

CITY of TAMPA
WASTEWATER DEPARTMENT

KRAUSE PS REHABILITATION

CONDUIT SCHEDULE

NO.	DATE	REVISIONS

DRAWN: RWB
DESIGN: STK
QC: BEH
DATE: 05/01/14

SHEET E-52

B080-114

PROPOSED CONDUIT / CONDUCTOR SCHEDULE

CONDUIT NO.	COND. SIZE	NO. WIRES	NO. SEALS	WIRE SIZE	FROM	TO	REMARKS
M127	1"	1		4/C #10	JUNCTION BOX	PUMP 2 MOV	PUMP NO. 2 MOV POWER. SUBMERSIBLE CABLE.
M128	3/4"	3		#10	MCC-KPS	AIR COMPRESSOR AC-1 CONTROL PANEL	AIR COMPRESSOR AC-1 POWER
		1		#10 GND.			
M129	3/4"	3		#10	MCC-KPS	AIR COMPRESSOR AC-2 CONTROL PANEL	AIR COMPRESSOR AC-2 POWER
		1		#10 GND.			
M130	3/4"	3		#10	MCC-KPS	VACUUM PUMP VP-2 CONTROL PANEL	VACUUM PUMP VP-2 POWER
		1		#10 GND.			
M131	1"	1		4/C #10	MCC-KPS	PUMP NO. 1 BLOWER	PUMP NO. 1 BLOWER. CABLE PROVIDED BY PUMP SUPPLIER.
M132	1"	1		4/C #10	MCC-KPS	PUMP NO. 2 BLOWER	PUMP NO. 2 BLOWER. CABLE PROVIDED BY PUMP SUPPLIER.
M133	1"	1		4/C #10	MCC-KPS	PUMP NO. 3 BLOWER	PUMP NO. 3 BLOWER. CABLE PROVIDED BY PUMP SUPPLIER.
M134	1"	1		4/C #10	MCC-KPS	PUMP NO. 4 BLOWER	PUMP NO. 4 BLOWER. CABLE PROVIDED BY PUMP SUPPLIER.
L200	2"	3		#2/0	TRANSFORMER T1	PANELBOARD LPA	PANELBOARD LPA POWER
		1		#2/0 NEUT.			
		1		#4 GND.			
L201	3/4"	1		#1	TRANSFORMER T1	GROUND SYSTEM	GROUNDING ELECTRODE CONDUCTOR
L202	3/4"	1		#12	PANELBOARD LPA	CONTROL PANEL/PLC	CONTROL PANEL/PLC POWER
		1		#12 NEUT.			
		1		#12 GND.			
L203	3/4"	1		#12	PANELBOARD LPA	WET WELL BUBBLER PANEL	WET WELL BUBBLER PANEL POWER
		1		#12 NEUT.			
		1		#12 GND.			
L204A	3/4"	2		#10	PANELBOARD LPA	CIRCUIT BREAKER UPS	CIRCUIT BREAKER UPS-MODULE A POWER
		1		#10 NEUT.			
		1		#10 GND.			
L204B	3/4"	2		#10	PANELBOARD LPA	CIRCUIT BREAKER UPS	CIRCUIT BREAKER UPS-MODULE B POWER
		1		#10 NEUT.			
		1		#10 GND.			
L204C	3/4"	2		#10	PANELBOARD LPA	CIRCUIT BREAKER UPS	CIRCUIT BREAKER UPS-MODULE C POWER
		1		#10 NEUT.			
		1		#10 GND.			
L205	3/4"	1		#12	PANELBOARD LPA	FLOW METER TOTALIZER	FLOW METER TOTALIZER POWER
		1		#12 NEUT.			
		1		#12 GND.			
L206	3/4"	1		#12	PANELBOARD LPA	AIR DRYER	AIR DRYER POWER
		1		#12 NEUT.			
		1		#12 GND.			

ENGINEER OF RECORD:
BOB E. HALLMAN, P.E.
FLORIDA REGISTRATION NO. 20761

Engineering Design Technologies Corp.
P.O. Box 152403
Tampa, FL 33684-2403
813.289.8080
813.282.9184 FAX
engineering@edt1.com
Certificate of Authorization Number: 4795

CITY of TAMPA
WASTEWATER DEPARTMENT

KRAUSE PS REHABILITATION

CONDUIT SCHEDULE

NO.	DATE	REVISIONS

DRAWN: RWB
DESIGN: STK
QC: BEH
DATE: 05/01/14

SHEET E-53

B080-115

PROPOSED CONDUIT / CONDUCTOR SCHEDULE

CONDUIT NO.	COND. SIZE	NO. WIRES	NO. SEALS	WIRE SIZE	FROM	TO	REMARKS
C300A	3"	15		3/C #12	PUMP NO. 1 AFD	PUMP NO. 1 CONTROLS	CONTROL & STATUS. SUBMERSIBLE CABLES.
C300B	1"	1		4/C #12	PUMP NO. 1 AFD	PUMP NO. 1	PUMP NO. 1 SPACE HEATER & THERMOSTAT. CABLE PROVIDED BY PUMP SUPPLIER.
C301A	3"	15		3/C #12	PUMP NO. 2 AFD	PUMP NO. 2 CONTROLS	CONTROL & STATUS. SUBMERSIBLE CABLES.
C301B	1"	1		4/C #12	PUMP NO. 2 AFD	PUMP NO. 2	PUMP NO. 2 SPACE HEATER & THERMOSTAT. CABLE PROVIDED BY PUMP SUPPLIER.
C302A	3"	15		3/C #12	PUMP NO. 3 AFD	PUMP NO. 3 CONTROLS	CONTROL & STATUS. SUBMERSIBLE CABLES.
C302B	1"	1		4/C #12	PUMP NO. 3 AFD	PUMP NO. 3	PUMP NO. 3 SPACE HEATER & THERMOSTAT. CABLE PROVIDED BY PUMP SUPPLIER.
C303A	3"	15		3/C #12	PUMP NO. 4 AFD	PUMP NO. 4 CONTROLS	CONTROL & STATUS. SUBMERSIBLE CABLES.
C303B	1"	1		4/C #12	PUMP NO. 4 AFD	PUMP NO. 4	PUMP NO. 4 SPACE HEATER & THERMOSTAT. CABLE PROVIDED BY PUMP SUPPLIER.
C304	1 1/2"	24		#12	CONTROL PANEL/PLC	SWITCHBOARD-KPS (BUS A)	CIRCUIT BREAKER STATUS
		6		#12 SPARE			
		1		#12 GND.			
C305	1 1/2"	20		#12	CONTROL PANEL/PLC	SWITCHBOARD-KPS (BUS B)	CIRCUIT BREAKER STATUS
		6		#12 SPARE			
		1		#12 GND.			
C306	3 1/2"	102		#12	SWITCHBOARD-KPS (BUS A)	REMOTE CIRCUIT BREAKER PANEL (RCBP)	CIRCUIT BREAKER CONTROL & STATUS
		12		#12 SPARE			
		1		#12 GND.			
C307	3 1/2"	100		#12	SWITCHBOARD-KPS (BUS B)	REMOTE CIRCUIT BREAKER PANEL (RCBP)	CIRCUIT BREAKER CONTROL & STATUS
		12		#12 SPARE			
		1		#12 GND.			
C308	1 1/4"	3		#10	SWITCHBOARD-KPS (BUS A)	CIRCUIT BREAKER UPS-MODULE A	BUS A CIRCUIT BREAKER POWER
		3		#10 NEUT.			
		1		#10 GND.			
C309	1 1/4"	3		#10	SWITCHBOARD-KPS (BUS B)	CIRCUIT BREAKER UPS-MODULE B	BUS B CIRCUIT BREAKER POWER
		3		#10 NEUT.			
		1		#10 GND.			
C310	1 1/2"	22		#12	CONTROL PANEL/PLC	PUMP NO. 4 AFD	CONTROL & STATUS
		6		#12 SPARE			
		1		#12 GND.			
C311	1 1/2"	22		#12	CONTROL PANEL/PLC	PUMP NO. 3 AFD	CONTROL & STATUS
		6		#12 SPARE			
		1		#12 GND.			
C312	1 1/2"	22		#12	CONTROL PANEL/PLC	PUMP NO. 2 AFD	CONTROL & STATUS
		6		#12 SPARE			
		1		#12 GND.			
C313	1 1/2"	22		#12	CONTROL PANEL/PLC	PUMP NO. 1 AFD	CONTROL & STATUS
		6		#12 SPARE			
		1		#12 GND.			

ENGINEER OF RECORD:
BOB E. HALLMAN, P.E.
FLORIDA REGISTRATION NO. 20761

Engineering Design Technologies Corp.
P.O. Box 152403
Tampa, FL 33684-2403
813.289.8080
813.282.9184 FAX
engineering@edt1.com
Certificate of Authorization Number: 4795

CITY of TAMPA
WASTEWATER DEPARTMENT

KRAUSE PS REHABILITATION

CONDUIT SCHEDULE

NO.	DATE	REVISIONS

DRAWN: RWB
DESIGN: STK
QC: BEH
DATE: 05/01/14

SHEET E-54

B080-116

PROPOSED CONDUIT / CONDUCTOR SCHEDULE

CONDUIT NO.	COND. SIZE	NO. WIRES	NO. SEALS	WIRE SIZE	FROM	TO	REMARKS
C314	3/4"	1		#10	REMOTE CIRCUIT BREAKER PANEL (RCBP)	CIRCUIT BREAKER UPS-MODULE C	RCBP POWER
		1		#10 NEUT.			
		1		#10 GND.			
C315	3/4"	6		#12	CONTROL PANEL/PLC	CIRCUIT BREAKER UPS	STATUS
		1		#12 GND.			
C316	3/4"	4		#12	CONTROL PANEL/PLC	AIR COMPRESSOR AC-1 CONTROL PANEL	STATUS
		1		#12 GND.			
C317	3/4"	4		#12	CONTROL PANEL/PLC	AIR COMPRESSOR AC-2 CONTROL PANEL	STATUS
		1		#12 GND.			
C318	3/4"	2		#12	CONTROL PANEL/PLC	VACUUM PUMP VP-1 CONTROL PANEL	STATUS
		1		#12 GND.			
C319	3/4"	2		#12	CONTROL PANEL/PLC	VACUUM PUMP VP-2 CONTROL PANEL	STATUS
		1		#12 GND.			
C320	3/4"	2		#12	CONTROL PANEL/PLC	WET WELL LEL WARNING STROBE	WARNING INDICATION
		1		#12 GND.			
C321	3/4"	6	1	#12	CONTROL PANEL/PLC	FLOAT SWITCH TERMINAL BOX	FLOAT SWITCH LSH-1
		1		#12 GND.			
C322	3/4"	2		3/C #12	CONTROL PANEL/PLC	FLOAT SWITCH LSH-2 & LSH-3 (LOWER LEVEL)	FLOAT SWITCH LSH-2 & FLOAT SWITCH LSH-3
C323	3/4"	1		#10	SWITCHBOARD-KPS	CIRCUIT BREAKER UPS-MODULE C	TIE BREAKER POWER
		1		#10 NEUT.			
		1		#10 GND.			
C324	3/4"	4		#12	PUMP NO. 1 AFD	MCC-KPS	PUMP NO. 1 BLOWER CONTROL
		1		#12 GND.			
C325	3/4"	4		#12	PUMP NO. 2 AFD	MCC-KPS	PUMP NO. 2 BLOWER CONTROL
		1		#12 GND.			
C326	3/4"	4		#12	PUMP NO. 3 AFD	MCC-KPS	PUMP NO. 3 BLOWER CONTROL
		1		#12 GND.			
C327	3/4"	4		#12	PUMP NO. 4 AFD	MCC-KPS	PUMP NO. 4 BLOWER CONTROL
		1		#12 GND.			
C328	1 1/2"	24		#12	CONTROL PANEL/PLC	MCC-KPS	BLOWER CONTROL & STATUS
		1		#12 GND.			

ENGINEER OF RECORD:
BOB E. HALLMAN, P.E.
FLORIDA REGISTRATION NO. 20761

EDT
Engineering Design Technologies Corp.
P.O. Box 152403
Tampa, FL 33684-2403
813.289.8080
813.282.9184 FAX
engineering@edt1.com
Certificate of Authorization Number: 4795

CITY of TAMPA
WASTEWATER DEPARTMENT

KRAUSE PS REHABILITATION

CONDUIT SCHEDULE

NO.	DATE	REVISIONS

DRAWN: RWB
DESIGN: STK
QC: BEH
DATE: 05/01/14

SHEET E-55

B080-117

PROPOSED CONDUIT / CONDUCTOR SCHEDULE

CONDUIT NO.	COND. SIZE	NO. WIRES	NO. SEALS	WIRE SIZE	FROM	TO	REMARKS
A400	3/4"	2		2/C #16 SHLD.	CONTROL PANEL/PLC	WET WELL BUBBLER PANEL	WET WELL LEVEL. BELDEN 8719.
A401	1 1/4"	2		1.5 PR. #22 SHLD.	CONTROL PANEL/PLC	PUMP NO. 4 AFD	ANALOG & RS-485. BELDEN 3106A, BELDEN 8719.
		4		2/C #16 SHLD.			
A402	1 1/4"	2		1.5 PR. #22 SHLD.	PUMP NO. 4 AFD	PUMP NO. 3 AFD	ANALOG & RS-485. BELDEN 3106A, BELDEN 8719.
		3		2/C #16 SHLD.			
A403	1"	2		1.5 PR. #22 SHLD.	PUMP NO. 3 AFD	PUMP NO. 2 AFD	ANALOG & RS-485. BELDEN 3106A, BELDEN 8719.
		2		2/C #16 SHLD.			
A404	1"	2		1.5 PR. #22 SHLD.	PUMP NO. 2 AFD	PUMP NO. 1 AFD	ANALOG & RS-485. BELDEN 3106A, BELDEN 8719.
		1		2/C #16 SHLD.			
A405	1 1/2"	9		3/C #16 SHLD.	PUMP NO. 1 AFD	PUMP NO. 1 RTD'S	PUMP TEMPERATURE. BELDEN 8618.
A406	3/4"	2		2/C #16 SHLD.	CONTROL PANEL/PLC	PUMP NO. 1 VIBRATION SENSORS	PUMP VIBRATION. BELDEN 8719.
A407	1 1/2"	9		3/C #16 SHLD.	PUMP NO. 2 AFD	PUMP NO. 2 RTD'S	PUMP TEMPERATURE. BELDEN 8618.
A408	3/4"	2		2/C #16 SHLD.	CONTROL PANEL/PLC	PUMP NO. 2 VIBRATION SENSORS	PUMP VIBRATION. BELDEN 8719.
A409	1 1/2"	9		3/C #16 SHLD.	PUMP NO. 3 AFD	PUMP NO. 3 RTD'S	PUMP TEMPERATURE. BELDEN 8618.
A410	3/4"	2		2/C #16 SHLD.	CONTROL PANEL/PLC	PUMP NO. 3 VIBRATION SENSORS	PUMP VIBRATION. BELDEN 8719.
A411	1 1/2"	9		3/C #16 SHLD.	PUMP NO. 4 AFD	PUMP NO. 4 RTD'S	PUMP TEMPERATURE. BELDEN 8618.
A412	3/4"	2		2/C #16 SHLD.	CONTROL PANEL/PLC	PUMP NO. 4 VIBRATION SENSORS	PUMP VIBRATION. BELDEN 8719.
A413	3/4"	2		2/C #16 SHLD.	CONTROL PANEL/PLC	FLOW METER TOTALIZER	FLOW RATE & SCALED PULSE. BELDEN 8719.
A414	3/4"	1		2/C #16 SHLD.	CONTROL PANEL/PLC	GAS DETECTOR TRANSMITTER	WET WELL GAS PERCENTAGE. BELDEN 8719.
A415	2"	1		0.625 OHM HELIAX CABLE	CONTROL PANEL/PLC	TELEMETRY ANTENNA	COMMUNICATION – HELIAX 2DF 4.5 – 50A. PROVIDE CONNECTORS AS REQUIRED.

NOTES:

1. THE SHIELD & DRAIN WIRES FOR ANALOG CABLES SHALL BE GROUNDED AT THE PLC ONLY. THE SHIELD & DRAIN WIRE AT THE END DEVICE SHALL BE NEATLY TRIMMED & TAPED w/ 2 LAYERS OF VINYL ELECTRICAL TAPE (SCOTCH 33+).

ENGINEER OF RECORD:
BOB E. HALLMAN, P.E.
FLORIDA REGISTRATION NO. 20761

Engineering Design Technologies Corp.
P.O. Box 152403
Tampa, FL 33684-2403
813.289.8080
813.282.9184 FAX
engineering@edt1.com
Certificate of Authorization Number: 4795

CITY of TAMPA
WASTEWATER DEPARTMENT

KRAUSE PS REHABILITATION

CONDUIT SCHEDULE

NO.	DATE	REVISIONS

DRAWN: RWB
DESIGN: STK
QC: BEH
DATE: 05/01/14

SHEET E-56

B080-118

BILL OF MATERIALS

MARK	DESCRIPTION	RATING	MANUFACTURER	CATALOG NUMBER	REMARKS
BYP	UPS BYPASS SWITCH	2P, 16A, 120 VAC	ENTRELEC	VY AR 16 SC SERIES	DIN RAIL MOUNTED
CB1 – CB3	DIN RAIL MOUNT SUPPLEMENTARY PROTECTOR	1P, 10A, 120 VAC	SIEMENS	5SY4110–7	PROVIDE 1–POLE COMB BUSBAR ON LINE SIDE.
CB4	DIN RAIL MOUNT SUPPLEMENTARY PROTECTOR	1P, 2A, 120 VAC	SIEMENS	5SY4102–7	PROVIDE 1–POLE COMB BUSBAR ON LINE SIDE.
CCB	CONTROL CIRCUIT BREAKER	1P, 20A, 120 VAC	SIEMENS	BQXD SERIES	INSULATE UNUSED CONNECTION POSITIONS.
ENC	CONTROL PANEL ENCLOSURE	72" x 72" x 16"	HOFFMAN	A727216ULP	w/ A72P72SS6 BACK PANEL
EP–GFCI	ETHERNET PORT/GFCI	120 VAC, 5A	GRACE ENGINEERING	P–R2–K3RF0	PROVIDE ETHERNET CONNECTION TO PLC.
GB–AC	AC GROUND BLOCK	240 VAC, 225A	SIEMENS	EGK	PROVIDE MOUNTING HARDWARE.
GB–DC	DC GROUND BLOCK	240 VAC, 225A	SIEMENS	EGK	PROVIDE MOUNTING HARDWARE.
HMI–1	HUMAN MACHINE INTERFACE – ANNUNCIATOR	24 VDC, 15"	MAPLE SYSTEMS	HMI5150X	ANNUNCIATOR
HMI–2	HUMAN MACHINE INTERFACE – PUMP CONTROL	24 VDC, 7"	MAPLE SYSTEMS	HMI5070NH	PUMP CONTROL
ISR–1	INTRINSICALLY SAFE RELAY	120 VAC	DIVERSIFIED ELECTRONICS	ISO–120–AAE	DUAL CHANNEL
LEL	WET WELL LEL DISPLAY	120 VAC	PRECISION DIGITAL	PD765–6R2–10	w/ 2 PROGRAMMABLE RELAYS & 24 VDC POWER SUPPLY
NB	NEUTRAL BLOCK	240 VAC, 225A	SIEMENS	CNLK18	PROVIDE MOUNTING HARDWARE.
PCSR	PUMP CONTROLLER/SCADA/RADIO	----	MOTOROLA	ACE 3600 SERIES	REFERENCE SPECIFICATIONS.
PS1	24 VDC POWER SUPPLY	INPUT 1ø, 120 VAC, 1.3A OUTPUT 24 VDC, 2.5A	SOLA	SDN 2.5–24–100	PROVIDE MOUNTING TRACK AND ACCESSORIES.
REC	DUPLEX RECEPTACLE	20A, 125 VAC	LEVITON	5362–I	PROVIDE ALUMINUM BACK BOX & ALUMINUM COVERPLATE.
SS1 – SS2	DIN RAIL MOUNT SURGE SUPPRESSOR	1ø, 120 VAC, 60 HZ	PHOENIX CONTACT	2807586	PROVIDE MOUNTING TRACK & BASE. (2817741)
UPS	UNINTERRUPTIBLE POWER SUPPLY	120 VAC, 500 VA/300W	SOLA	SDU500	DIN RAIL MOUNTED

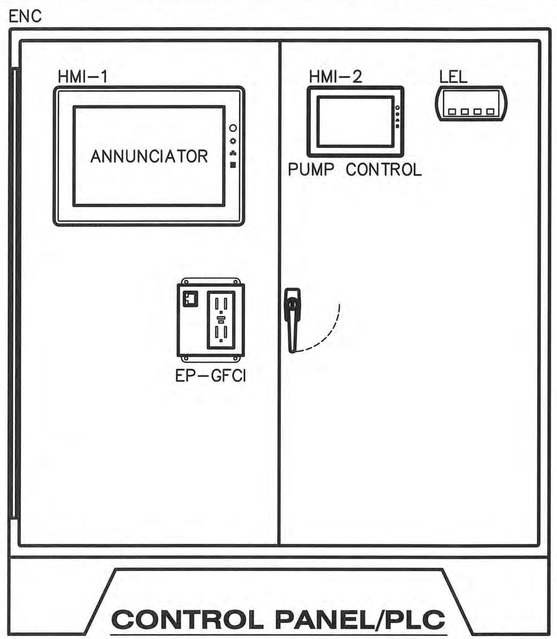

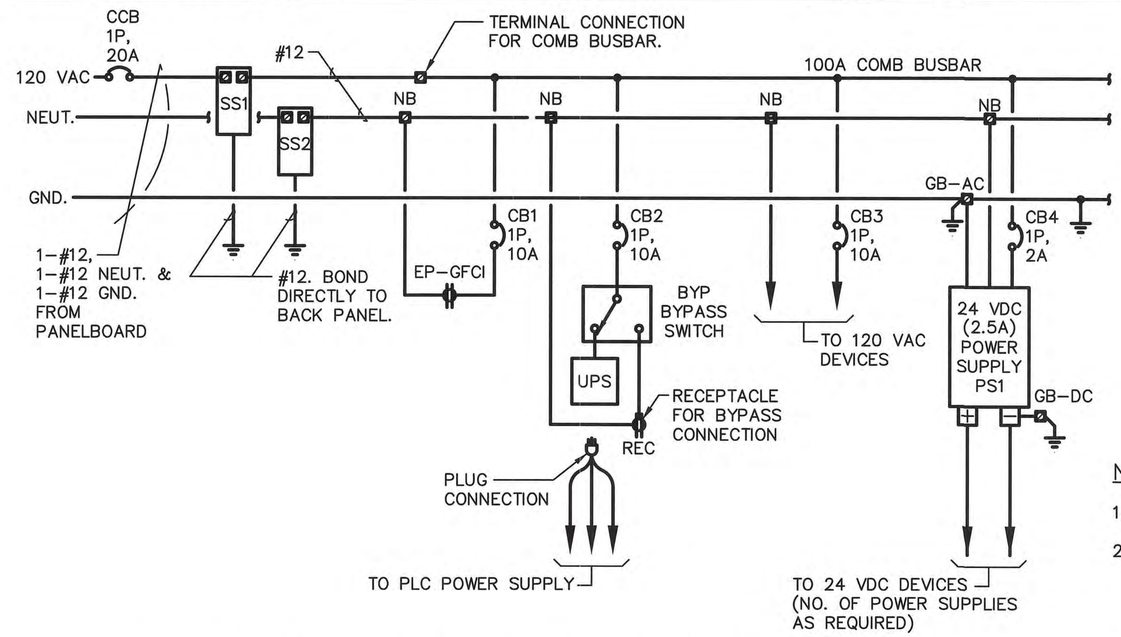

CONTROL PANEL/PLC POWER CONNECTIONS

NOTES:

1. REFERENCE PLC INTERCONNECTION DIAGRAMS.
2. THE SHIELD AND DRAIN WIRE FOR EACH SHIELDED CABLE SHALL BE GROUNDED AT THE CONTROL PANEL/PLC ONLY. THE SHIELD AND DRAIN WIRE AT THE PUMP CONTROL JUNCTION BOX SHALL BE NEATLY TRIMMED & TAPED w/ (2) LAYERS OF VINYL ELECTRICAL TAPE (SCOTCH 33+).

△ DENOTES TERMINAL FOR FIELD CONNECTION.

ENGINEER OF RECORD:
BOB E. HALLMAN, P.E.
FLORIDA REGISTRATION NO. 20761

EDT
Engineering Design Technologies Corp.
P.O. Box 152403
Tampa, FL 33684-2403
813.289.8080
813.282.9184 FAX
engineering@edt1.com
Certificate of Authorization Number: 4795

CITY of TAMPA
WASTEWATER DEPARTMENT

KRAUSE PS REHABILITATION

CONTROL PANEL/PLC
POWER CONNECTIONS

NO.	DATE	REVISIONS

DRAWN: RWB
DESIGN: STK
QC: BEH
DATE: 05/01/14

SHEET I-1

B080-119

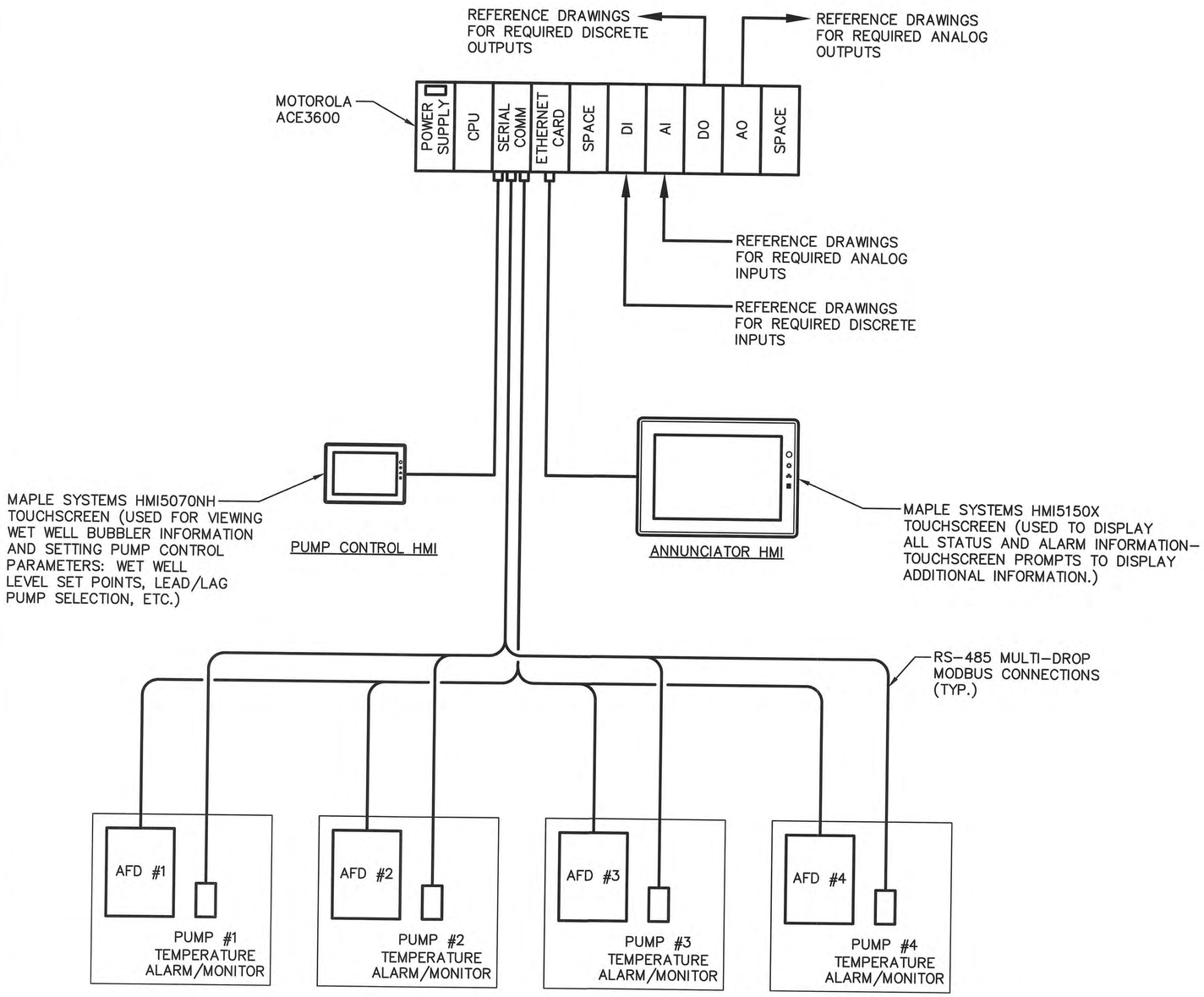

PROPOSED ANNUNCIATOR RISER DIAGRAM

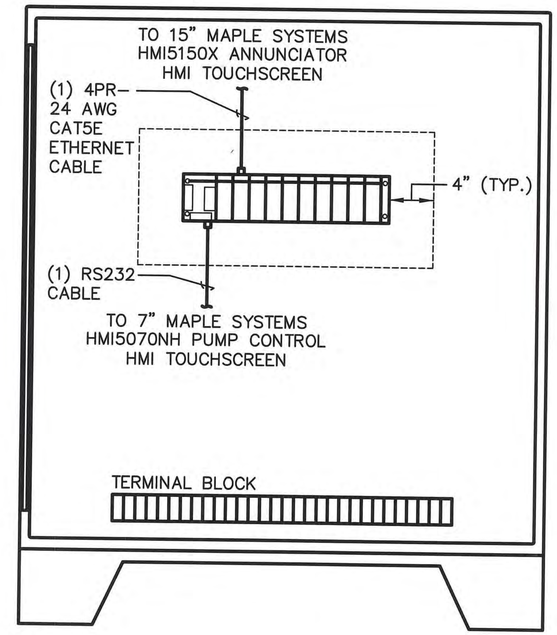

PARTIAL EQUIPMENT BACK PANEL LAYOUT

ENGINEER OF RECORD:
BOB E. HALLMAN, P.E.
FLORIDA REGISTRATION NO. 20761

Engineering Design Technologies Corp.
P.O. Box 152403
Tampa, FL 33684-2403
813.289.8080
813.282.9184 FAX
engineering@edt1.com
Certificate of Authorization Number: 4795

CITY of TAMPA
WASTEWATER DEPARTMENT

KRAUSE PS REHABILITATION

PROPOSED ANNUNCIATOR RISER DIAGRAM & PARTIAL EQUIPMENT BACK PANEL LAYOUT

NO.	DATE	REVISIONS

DRAWN: RWB
DESIGN: STK
QC: BEH
DATE: 05/01/14

SHEET I-2

B080-I20

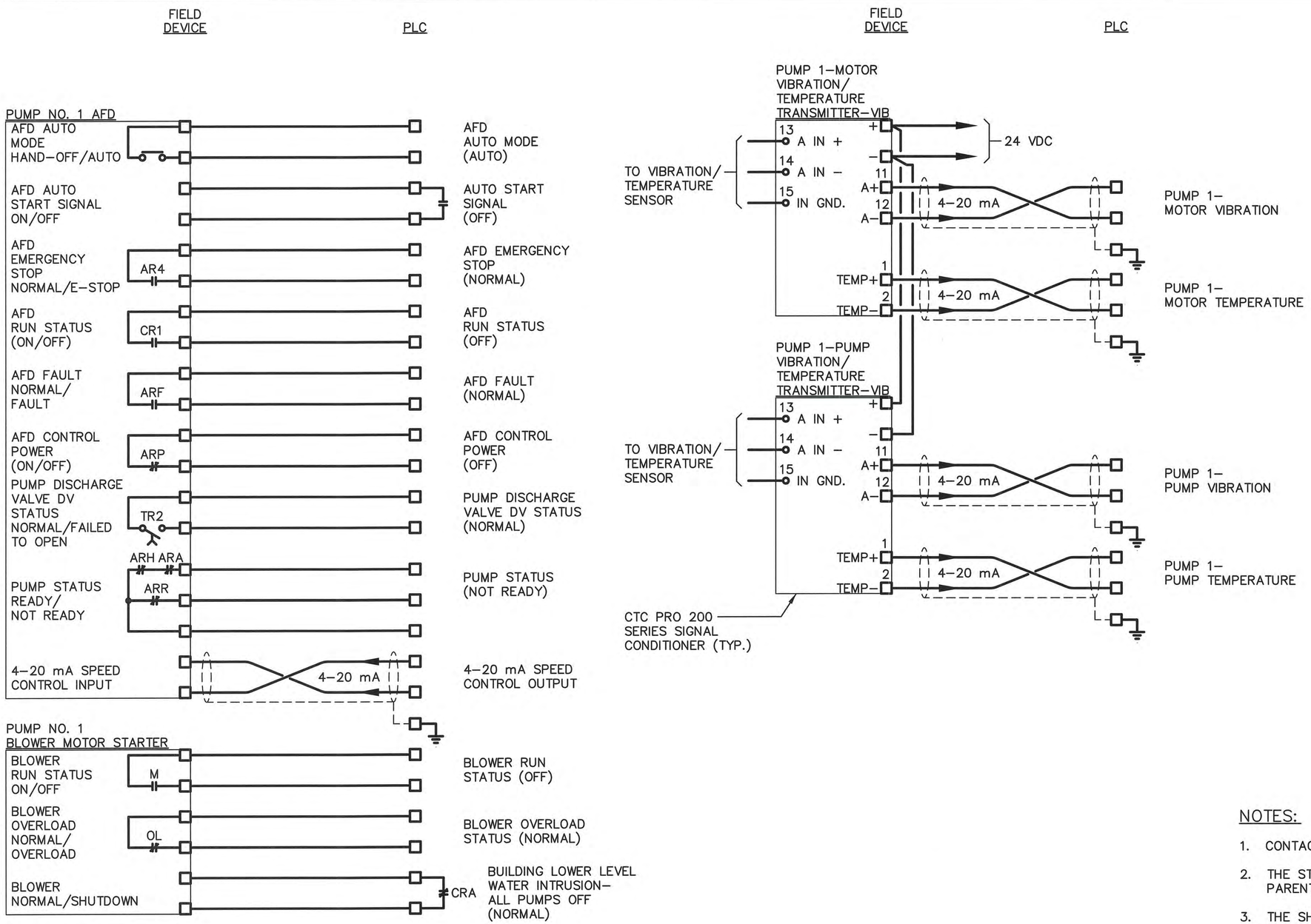

NOTES:

1. CONTACTS ARE SHOWN IN DE–ENERGIZED STATE.
2. THE STATUS FOR FIELD CONTACT POSITIONS ARE DENOTED IN PARENTHESIS.
3. THE SHIELD & DRAIN WIRES FOR ANALOG CABLES SHALL BE GROUNDED AT THE PLC ONLY. THE SHIELD & DRAIN WIRE AT THE END DEVICE SHALL BE NEATLY TRIMMED & TAPED w/ 2 LAYERS OF VINYL ELECTRICAL TAPE (SCOTCH 33+).
4. A TIME DELAY OF 20 SECONDS SHALL BE PROVIDED BEFORE THE STARTING OF ANY MOTOR AFTER A LOSS OF UTILITY POWER.

ENGINEER OF RECORD:
BOB E. HALLMAN, P.E.
FLORIDA REGISTRATION NO. 20761

Engineering Design Technologies Corp.
P.O. Box 152403
Tampa, FL 33684-2403
813.289.8080
813.282.9184 FAX
engineering@edt1.com
Certificate of Authorization Number: 4795

CITY of TAMPA
WASTEWATER DEPARTMENT

KRAUSE PS REHABILITATION

PLC INTERCONNECTION DIAGRAM
(SHEET 1 OF 6)

NO.	DATE	REVISIONS

DRAWN: RWB
DESIGN: STK
QC: BEH
DATE: 05/01/14

SHEET I-3

B080-121

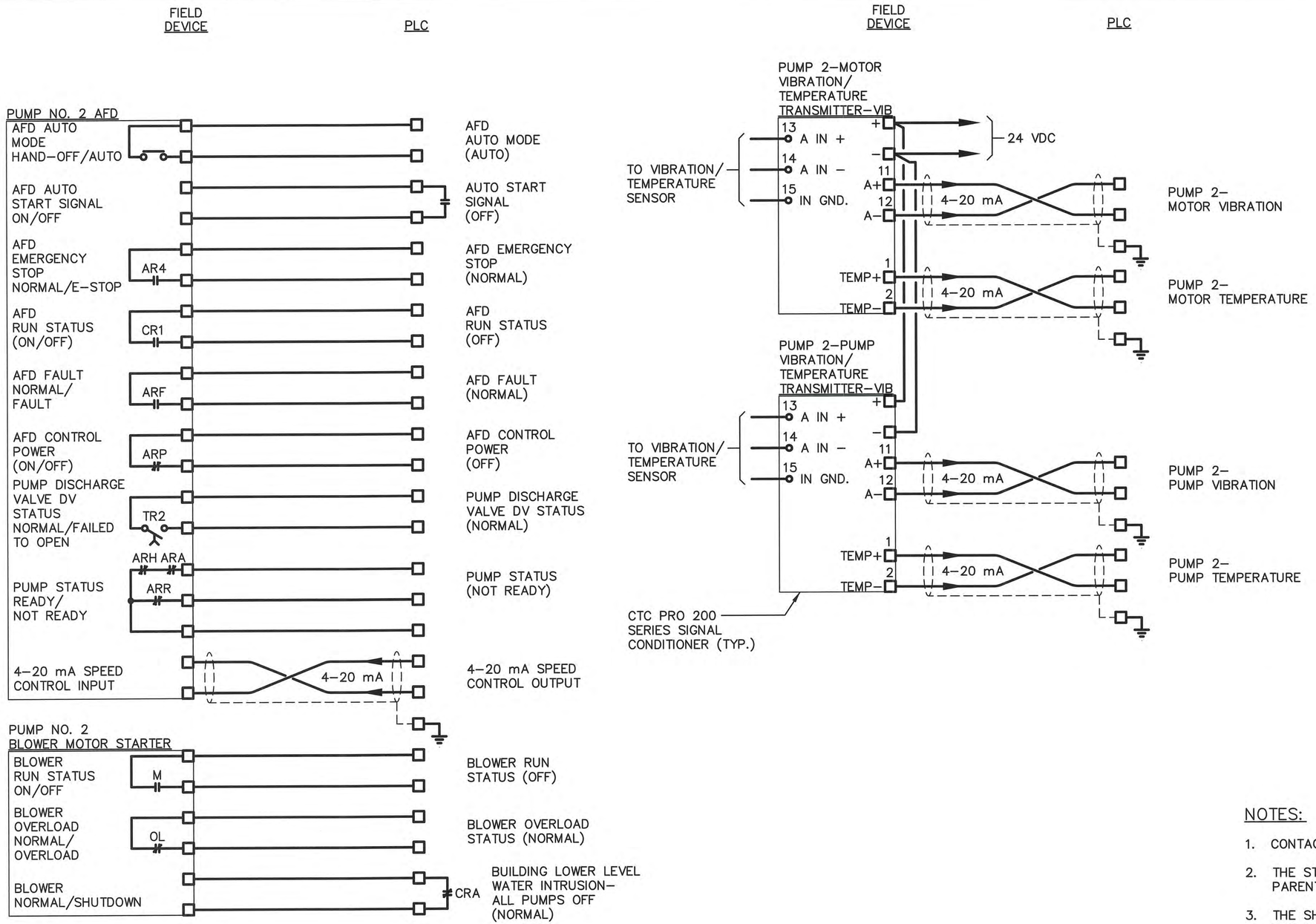

NOTES:

1. CONTACTS ARE SHOWN IN DE–ENERGIZED STATE.
2. THE STATUS FOR FIELD CONTACT POSITIONS ARE DENOTED IN PARENTHESIS.
3. THE SHIELD & DRAIN WIRES FOR ANALOG CABLES SHALL BE GROUNDED AT THE PLC ONLY. THE SHIELD & DRAIN WIRE AT THE END DEVICE SHALL BE NEATLY TRIMMED & TAPED w/ 2 LAYERS OF VINYL ELECTRICAL TAPE (SCOTCH 33+).
4. A TIME DELAY OF 20 SECONDS SHALL BE PROVIDED BEFORE THE STARTING OF ANY MOTOR AFTER A LOSS OF UTILITY POWER.

ENGINEER OF RECORD:
BOB E. HALLMAN, P.E.
FLORIDA REGISTRATION NO. 20761

Engineering Design Technologies Corp.
P.O. Box 152403
Tampa, FL 33684-2403
813.289.8080
813.282.9184 FAX
engineering@edt1.com
Certificate of Authorization Number: 4795

CITY of TAMPA
WASTEWATER DEPARTMENT

KRAUSE PS REHABILITATION

PLC INTERCONNECTION DIAGRAM
(SHEET 2 OF 6)

NO.	DATE	REVISIONS

DRAWN: RWB
DESIGN: STK
QC: BEH
DATE: 05/01/14

SHEET I-4

B080-I22

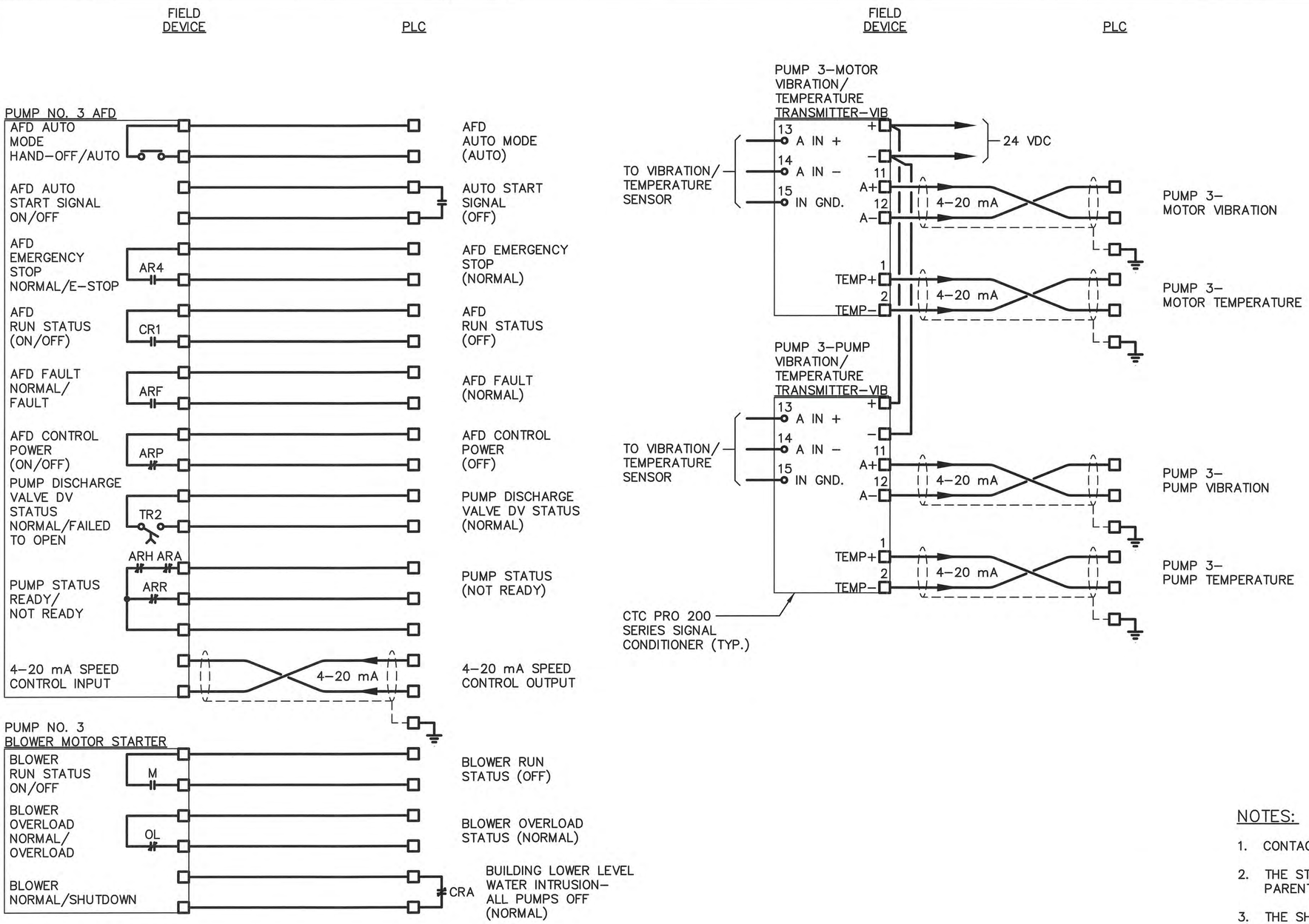

NOTES:

1. CONTACTS ARE SHOWN IN DE–ENERGIZED STATE.
2. THE STATUS FOR FIELD CONTACT POSITIONS ARE DENOTED IN PARENTHESIS.
3. THE SHIELD & DRAIN WIRES FOR ANALOG CABLES SHALL BE GROUNDED AT THE PLC ONLY. THE SHIELD & DRAIN WIRE AT THE END DEVICE SHALL BE NEATLY TRIMMED & TAPED w/ 2 LAYERS OF VINYL ELECTRICAL TAPE (SCOTCH 33+).
4. A TIME DELAY OF 20 SECONDS SHALL BE PROVIDED BEFORE THE STARTING OF ANY MOTOR AFTER A LOSS OF UTILITY POWER.

ENGINEER OF RECORD:
BOB E. HALLMAN, P.E.
FLORIDA REGISTRATION NO. 20761

Engineering Design Technologies Corp.
P.O. Box 152403
Tampa, FL 33684-2403
813.289.8080
813.282.9184 FAX
engineering@edt1.com
Certificate of Authorization Number: 4795

CITY of TAMPA
WASTEWATER DEPARTMENT

KRAUSE PS REHABILITATION

PLC INTERCONNECTION DIAGRAM
(SHEET 3 OF 6)

NO.	DATE	REVISIONS

DRAWN: RWB
DESIGN: STK
QC: BEH
DATE: 05/01/14

SHEET I-5

B080-123

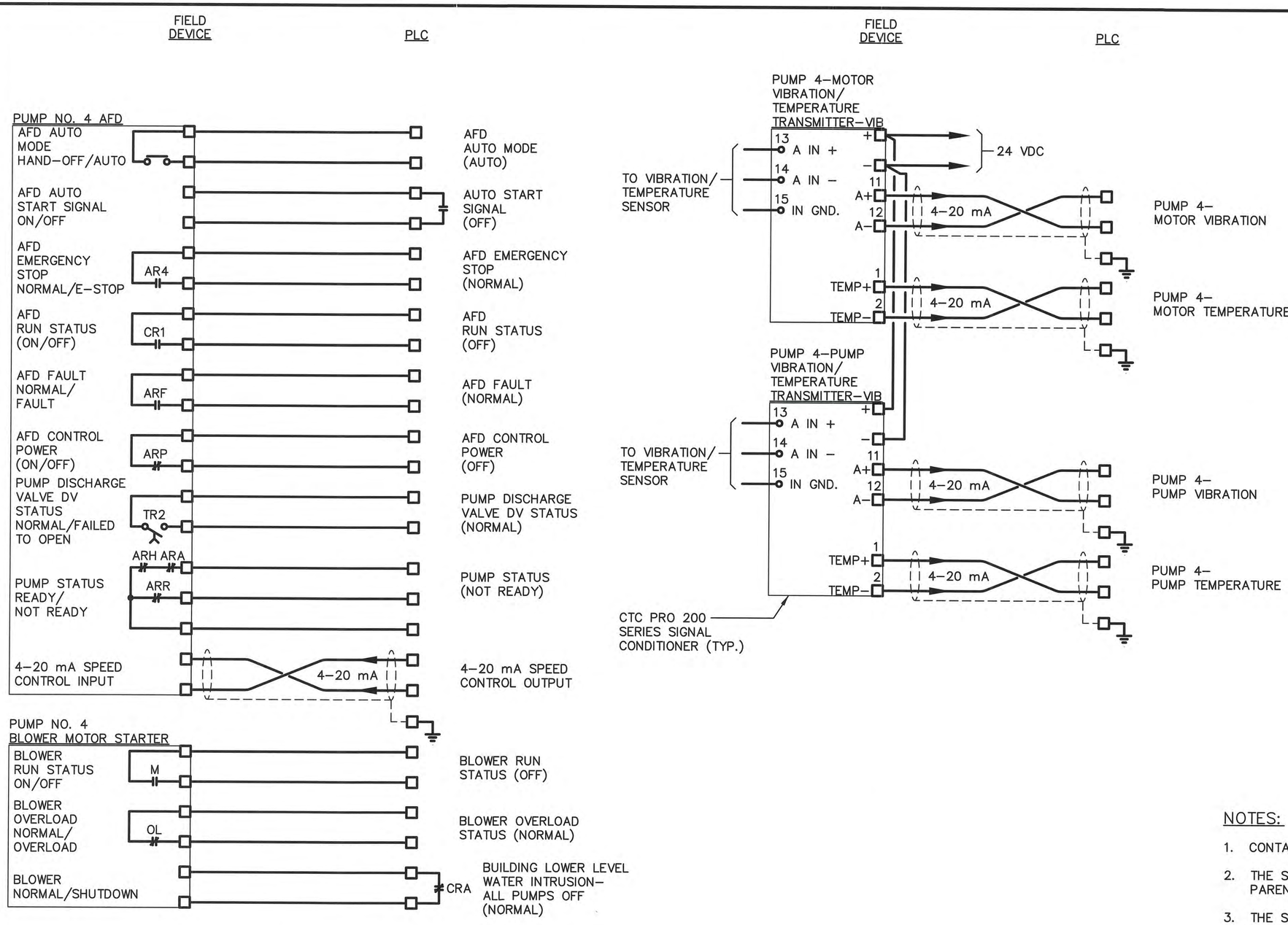

NOTES:

1. CONTACTS ARE SHOWN IN DE–ENERGIZED STATE.
2. THE STATUS FOR FIELD CONTACT POSITIONS ARE DENOTED IN PARENTHESIS.
3. THE SHIELD & DRAIN WIRES FOR ANALOG CABLES SHALL BE GROUNDED AT THE PLC ONLY. THE SHIELD & DRAIN WIRE AT THE END DEVICE SHALL BE NEATLY TRIMMED & TAPED w/ 2 LAYERS OF VINYL ELECTRICAL TAPE (SCOTCH 33+).
4. A TIME DELAY OF 20 SECONDS SHALL BE PROVIDED BEFORE THE STARTING OF ANY MOTOR AFTER A LOSS OF UTILITY POWER.

ENGINEER OF RECORD:
BOB E. HALLMAN, P.E.
FLORIDA REGISTRATION NO. 20761

Engineering Design Technologies Corp.
P.O. Box 152403
Tampa, FL 33684-2403
813.289.8080
813.282.9184 FAX
engineering@edt1.com
Certificate of Authorization Number: 4795

CITY of TAMPA
WASTEWATER DEPARTMENT

KRAUSE PS REHABILITATION

PLC INTERCONNECTION DIAGRAM
(SHEET 4 OF 6)

NO.	DATE	REVISIONS

DRAWN: RWB
DESIGN: STK
QC: BEH
DATE: 05/01/14

SHEET I-6

B080-124

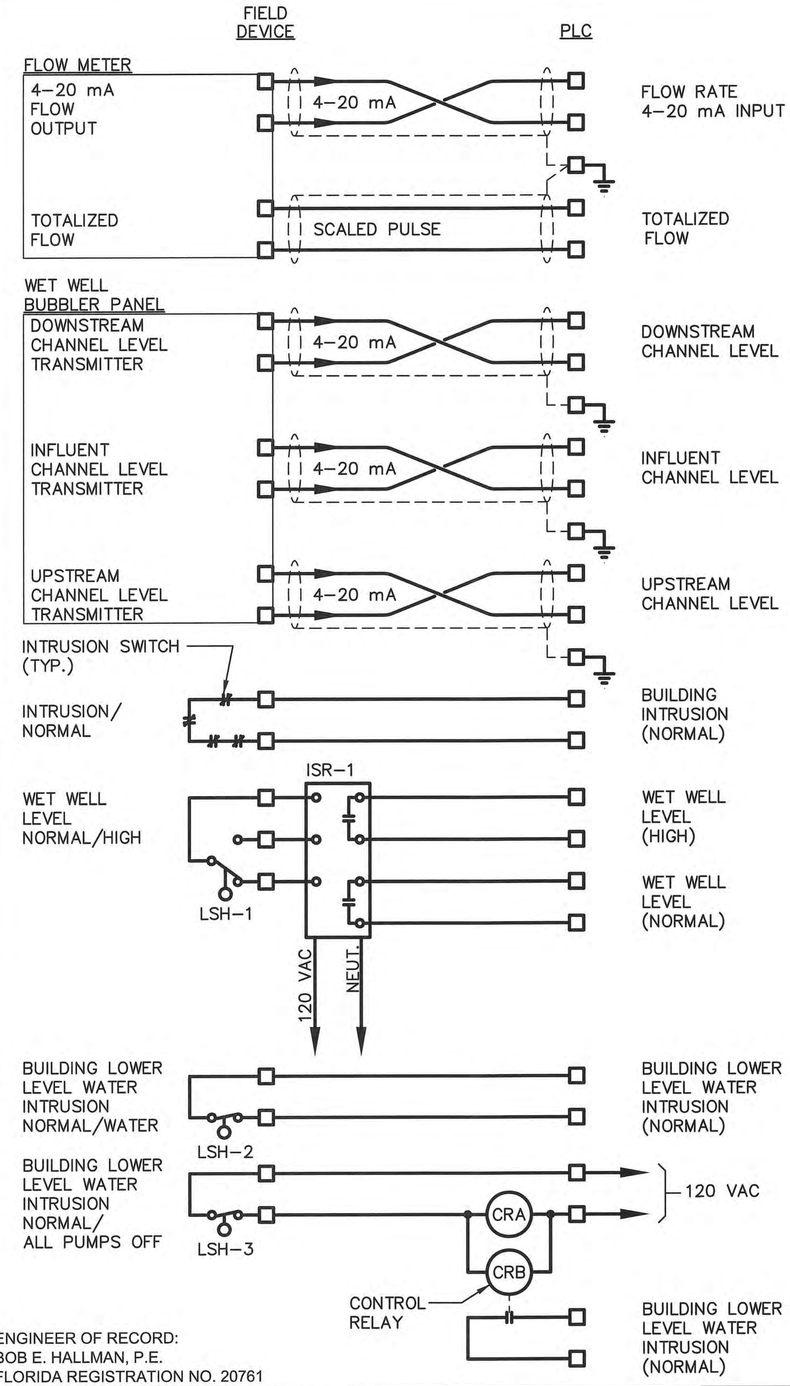

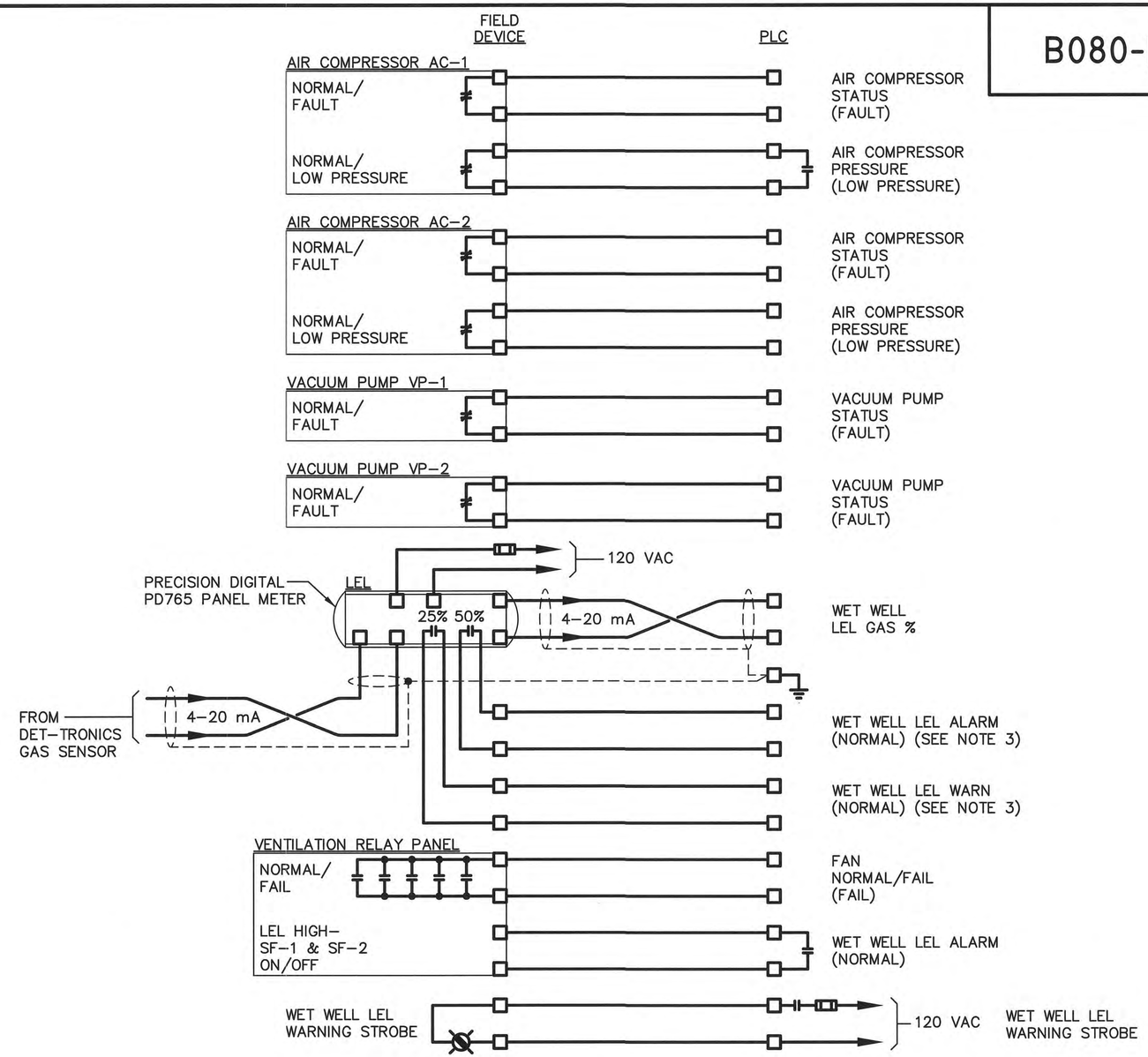

NOTES:

1. CONTACTS ARE SHOWN IN DE–ENERGIZED STATE.
2. THE STATUS FOR FIELD CONTACT POSITIONS ARE DENOTED IN PARENTHESIS.
3. LEL WARN SHALL BE SET AT 25% OR GREATER LEL. LEL ALARM SHALL BE SET AT 50% OR GREATER LEL.
4. THE SHIELD & DRAIN WIRES FOR ANALOG CABLES SHALL BE GROUNDED AT THE PLC ONLY. THE SHIELD & DRAIN WIRE AT THE END DEVICE SHALL BE NEATLY TRIMMED & TAPED w/ 2 LAYERS OF VINYL ELECTRICAL TAPE (SCOTCH 33+).
5. A TIME DELAY OF 20 SECONDS SHALL BE PROVIDED BEFORE THE STARTING OF ANY MOTOR AFTER A LOSS OF UTILITY POWER.

ENGINEER OF RECORD:
BOB E. HALLMAN, P.E.
FLORIDA REGISTRATION NO. 20761

Engineering Design Technologies Corp.
P.O. Box 152403
Tampa, FL 33684-2403
813.289.8080
813.282.9184 FAX
engineering@edt1.com
Certificate of Authorization Number: 4795

CITY of TAMPA
WASTEWATER DEPARTMENT

KRAUSE PS REHABILITATION

PLC INTERCONNECTION DIAGRAM
(SHEET 5 OF 6)

NO.	DATE	REVISIONS

DRAWN: RWB
DESIGN: STK
QC: BEH
DATE: 05/01/14

SHEET I-7

B080-I25

FIELD DEVICE	PLC
MAIN BREAKER KPS-A 52-1 STATUS OPEN/CLOSED	52-1 a
MAIN BREAKER KPS-A 52-1 STATUS NORMAL/TRIPPED	86-1
MAIN BREAKER KPS-B 52-2 STATUS OPEN/CLOSED	52-2 a
MAIN BREAKER KPS-B 52-2 STATUS NORMAL/TRIPPED	86-2
TIE BREAKER 52-T STATUS OPEN/CLOSED	52-T a
TIE BREAKER 52-T STATUS NORMAL/TRIPPED	86-T
GENERATOR BREAKER 52-G1 STATUS OPEN/CLOSED	52-G1 a
GENERATOR BREAKER 52-G1 STATUS NORMAL/TRIPPED	86-G1
GENERATOR BREAKER 52-G2 STATUS OPEN/CLOSED	52-G2 a
GENERATOR BREAKER 52-G2 STATUS NORMAL/TRIPPED	86-G2
MCC BUS A BREAKER 52-A1 STATUS OPEN/CLOSED	52-A1 a
MCC BUS A BREAKER 52-A1 STATUS NORMAL/TRIPPED	86-A1

PLC	FIELD DEVICE
MAIN BREAKER KPS-A 52-1 STATUS (OPEN)	MCC BUS B BREAKER 52-A1 STATUS OPEN/CLOSED
MAIN BREAKER KPS-A 52-1 STATUS (TRIPPED)	MCC BUS B BREAKER 52-A1 STATUS NORMAL/TRIPPED
MAIN BREAKER KPS-B 52-2 STATUS (OPEN)	PUMP NO. 1 AFD BREAKER 52-A1 STATUS OPEN/CLOSED
MAIN BREAKER KPS-B 52-2 STATUS (TRIPPED)	PUMP NO. 1 AFD BREAKER 52-A1 STATUS NORMAL/TRIPPED
TIE BREAKER 52-T STATUS (OPEN)	PUMP NO. 2 AFD BREAKER 52-A1 STATUS OPEN/CLOSED
TIE BREAKER 52-T STATUS (TRIPPED)	PUMP NO. 2 AFD BREAKER 52-A1 STATUS NORMAL/TRIPPED
GENERATOR BREAKER 52-G1 STATUS (OPEN)	PUMP NO. 3 AFD BREAKER 52-A1 STATUS OPEN/CLOSED
GENERATOR BREAKER 52-G1 STATUS (TRIPPED)	PUMP NO. 3 AFD BREAKER 52-A1 STATUS NORMAL/TRIPPED
GENERATOR BREAKER 52-G2 STATUS (OPEN)	PUMP NO. 4 AFD BREAKER 52-A1 STATUS OPEN/CLOSED
GENERATOR BREAKER 52-G2 STATUS (TRIPPED)	PUMP NO. 4 AFD BREAKER 52-A1 STATUS NORMAL/TRIPPED
MCC BUS A BREAKER 52-A1 STATUS (OPEN)	CIRCUIT BREAKER UPS-MODULE A NORMAL/FAILED
MCC BUS A BREAKER 52-A1 STATUS (TRIPPED)	CIRCUIT BREAKER UPS-MODULE B NORMAL/FAILED
	CIRCUIT BREAKER UPS-MODULE C NORMAL/FAILED
	CONTROL PANEL/ PLC UPS NORMAL/FAILED

PLC	FIELD DEVICE
MCC BUS B BREAKER 52-A1 STATUS (OPEN)	52-A1 a
MCC BUS B BREAKER 52-A1 STATUS (TRIPPED)	86-A1
PUMP NO. 1 AFD BREAKER 52-A1 STATUS (OPEN)	52-A1 a
PUMP NO. 1 AFD BREAKER 52-A1 STATUS (TRIPPED)	86-A1
PUMP NO. 2 AFD BREAKER 52-A1 STATUS (OPEN)	52-A1 a
PUMP NO. 2 AFD BREAKER 52-A1 STATUS (TRIPPED)	86-A1
PUMP NO. 3 AFD BREAKER 52-A1 STATUS (OPEN)	52-A1 a
PUMP NO. 3 AFD BREAKER 52-A1 STATUS (TRIPPED)	86-A1
PUMP NO. 4 AFD BREAKER 52-A1 STATUS (OPEN)	52-A1 a
PUMP NO. 4 AFD BREAKER 52-A1 STATUS (TRIPPED)	86-A1
CIRCUIT BREAKER UPS-MODULE A (FAILED)	
CIRCUIT BREAKER UPS-MODULE B (FAILED)	
CIRCUIT BREAKER UPS-MODULE C (FAILED)	
CONTROL PANEL/ PLC UPS (FAILED)	

FIELD DEVICE	PLC
PUMP NO. 1 KNIFE GATE- PUMP SUCTION VALVE	LS/14 CLOSED; LS/10 OPEN
PUMP NO. 2 KNIFE GATE- PUMP SUCTION VALVE	LS/14 CLOSED; LS/10 OPEN
PUMP NO. 3 KNIFE GATE- PUMP SUCTION VALVE	LS/14 CLOSED; LS/10 OPEN
PUMP NO. 4 KNIFE GATE- PUMP SUCTION VALVE	LS/14 CLOSED; LS/10 OPEN

KNIFE GATE- PUMP SUCTION VALVE POSITION OPEN/CLOSED (CLOSED)

NOTES:

1. CONTACTS ARE SHOWN IN DE-ENERGIZED STATE.
2. THE STATUS FOR FIELD CONTACT POSITIONS ARE DENOTED IN PARENTHESIS.
3. THE SHIELD & DRAIN WIRES FOR ANALOG CABLES SHALL BE GROUNDED AT THE PLC ONLY. THE SHIELD & DRAIN WIRE AT THE END DEVICE SHALL BE NEATLY TRIMMED & TAPED w/ 2 LAYERS OF VINYL ELECTRICAL TAPE (SCOTCH 33+).
4. A TIME DELAY OF 20 SECONDS SHALL BE PROVIDED BEFORE THE STARTING OF ANY MOTOR AFTER A LOSS OF UTILITY POWER.

ENGINEER OF RECORD:
BOB E. HALLMAN, P.E.
FLORIDA REGISTRATION NO. 20761

Engineering Design Technologies Corp.
P.O. Box 152403
Tampa, FL 33684-2403
813.289.8080
813.282.9184 FAX
engineering@edt1.com
Certificate of Authorization Number: 4795

CITY of TAMPA
WASTEWATER DEPARTMENT

KRAUSE PS REHABILITATION

PLC INTERCONNECTION DIAGRAM (SHEET 6 OF 6)

NO.	DATE	REVISIONS

DRAWN: RWB
DESIGN: STK
QC: BEH
DATE: 05/01/14

SHEET I-8

B080-126

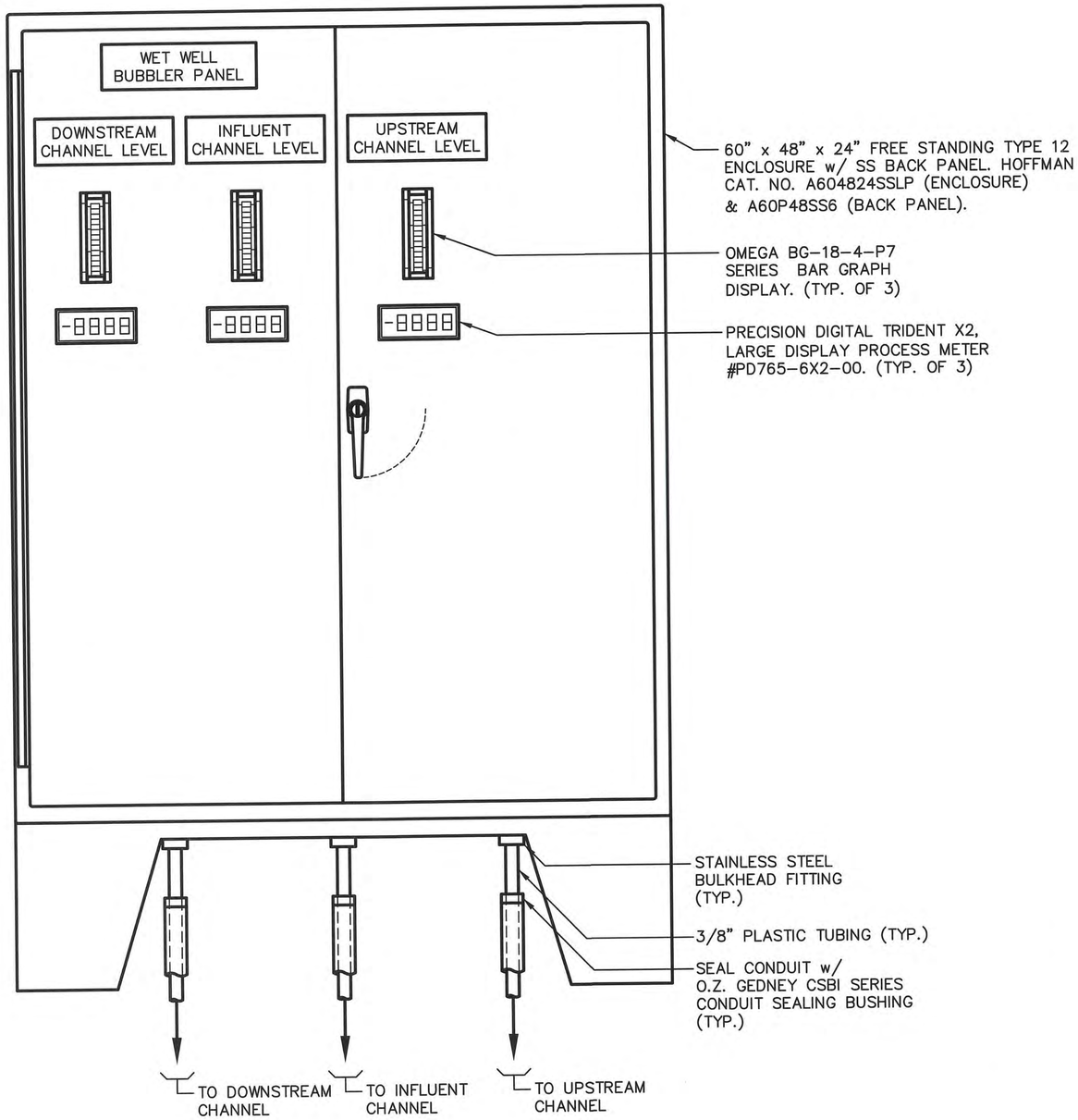

BUBBLER PANEL
NOT TO SCALE

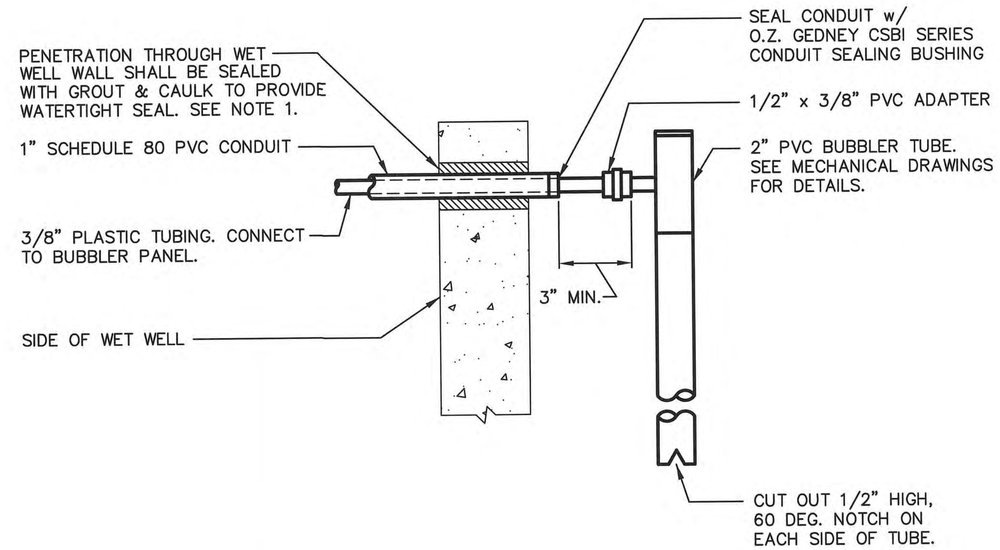

BUBBLER TUBE CONNECTION DETAIL
(TYP.)

NOTES:

1. AFTER CORE DRILLING HOLES THROUGH REINFORCED CONCRETE WALLS AND FLOORS, COAT EXPOSED REINFORCING STEEL CONCRETE SURFACES WITH EMACO P24 BY BASF. AFTER ROUTING CONDUIT THROUGH HOLE, FILL AND FINISH CONCRETE WITH A SHRINKAGE COMPENSATING REPAIR MORTAR WITH CORROSION INHIBITING PROPERTIES, EMACO S66 C1 BY BASF. REFERENCE STRUCTURAL DRAWINGS.

ENGINEER OF RECORD:
BOB E. HALLMAN, P.E.
FLORIDA REGISTRATION NO. 20761

Engineering Design Technologies Corp.
P.O. Box 152403
Tampa, FL 33684-2403
813.289.8080
813.282.9184 FAX
engineering@edt1.com
Certificate of Authorization Number: 4795

CITY of TAMPA
WASTEWATER DEPARTMENT

KRAUSE PS REHABILITATION

BUBBLER PANEL DETAILS
(SHEET 1 OF 2)

NO.	DATE	REVISIONS

DRAWN: RWB
DESIGN: STK
QC: BEH
DATE: 05/01/14

SHEET I-9

B080-127

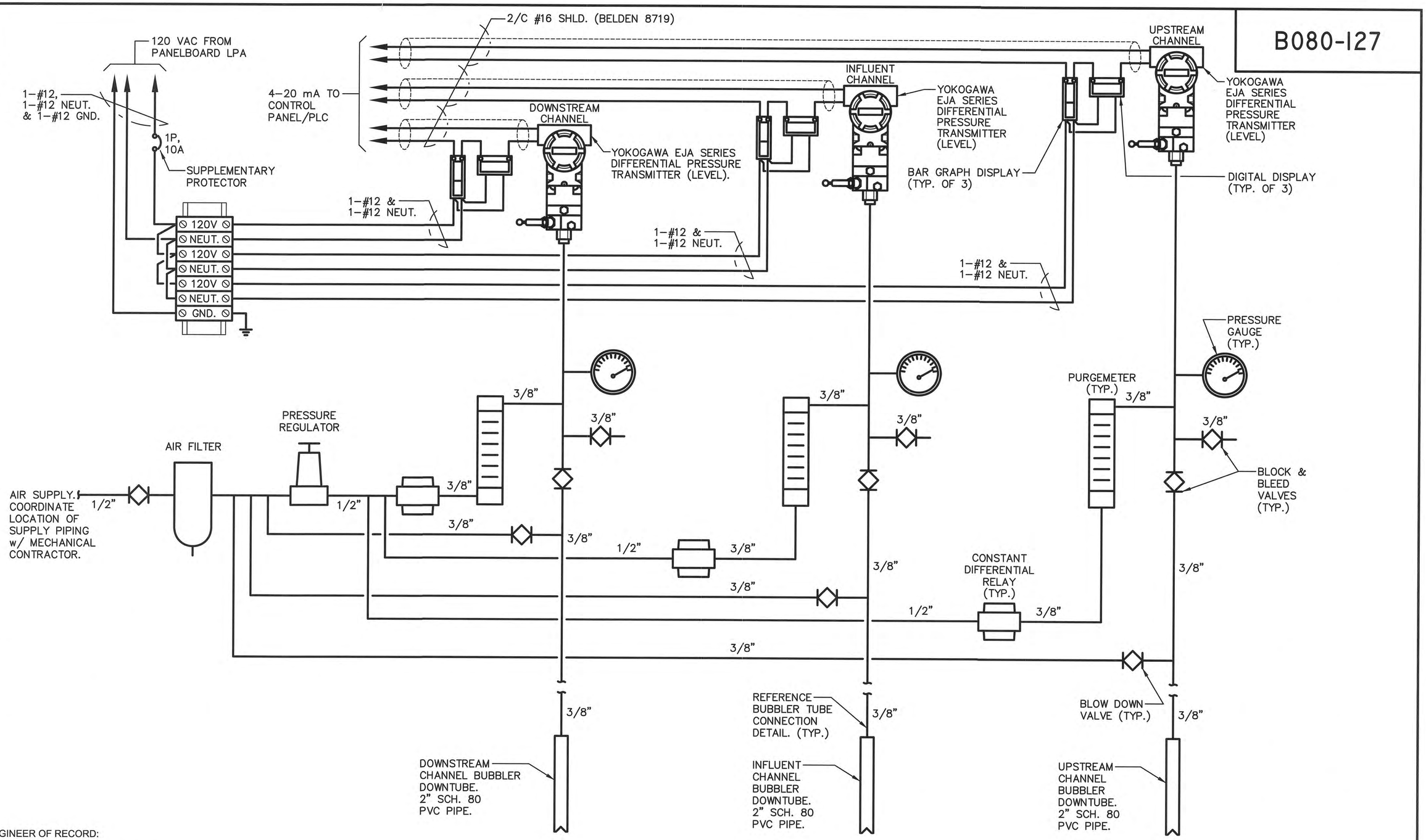

ENGINEER OF RECORD:
BOB E. HALLMAN, P.E.
FLORIDA REGISTRATION NO. 20761

Engineering Design Technologies Corp.
P.O. Box 152403
Tampa, FL 33684-2403
813.289.8080
813.282.9184 FAX
engineering@edt1.com
Certificate of Authorization Number: 4795

CITY of TAMPA
WASTEWATER DEPARTMENT

KRAUSE PS REHABILITATION

BUBBLER PANEL DETAILS
(SHEET 2 OF 2)

NO.	DATE	REVISIONS

DRAWN: RWB
DESIGN: STK
QC: BEH
DATE: 05/01/14

SHEET I-10

B080-128

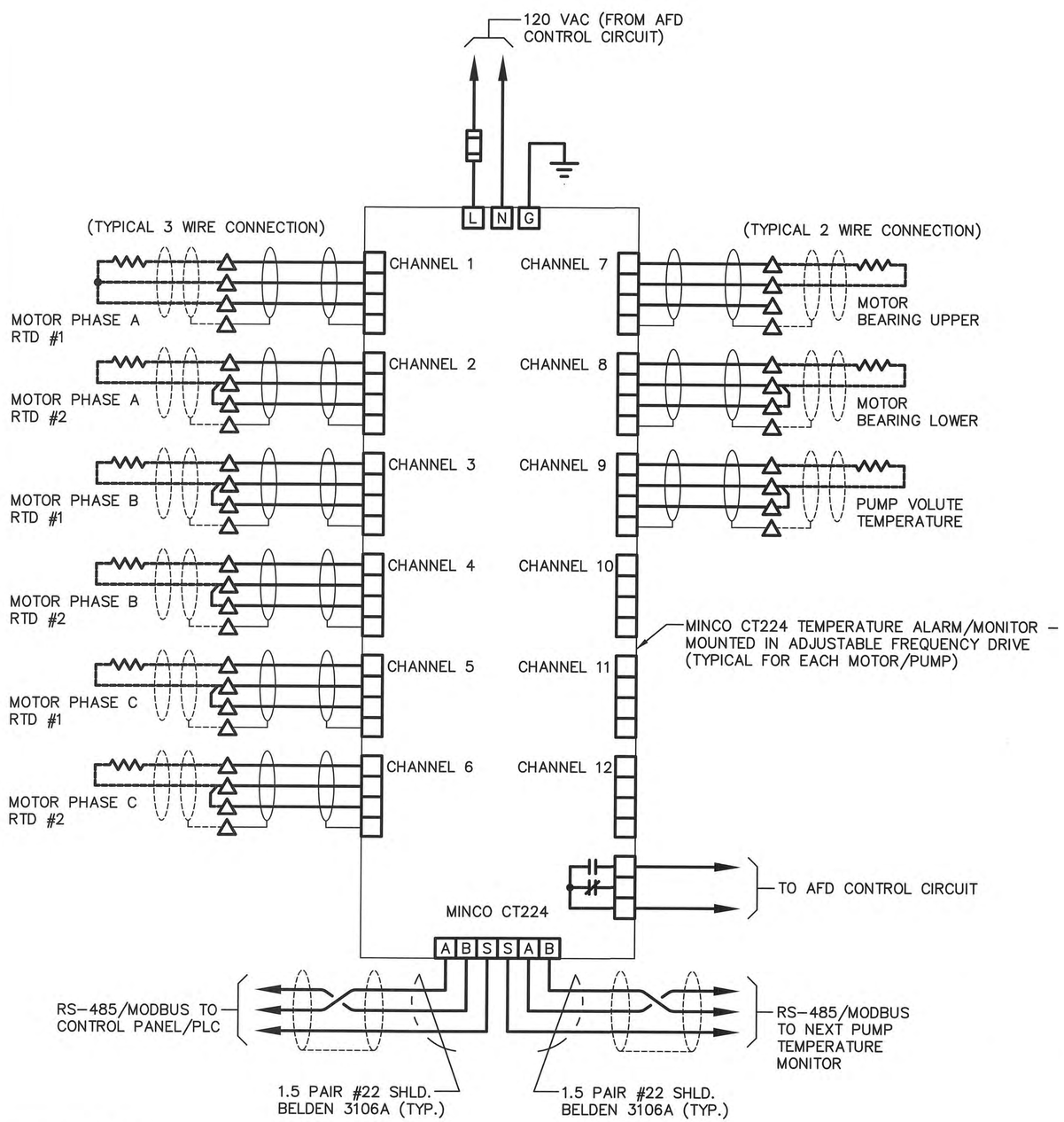

NOTES:

△ DENOTES TERMINAL FOR FIELD CONNECTION.

ENGINEER OF RECORD:
BOB E. HALLMAN, P.E.
FLORIDA REGISTRATION NO. 20761

EDT Engineering Design Technologies Corp.
P.O. Box 152403
Tampa, FL 33684-2403
813.289.8080
813.282.9184 FAX
engineering@edt1.com
Certificate of Authorization Number: 4795

CITY of TAMPA
WASTEWATER DEPARTMENT

KRAUSE PS REHABILITATION

TEMPERATURE ALARM/MONITOR DETAILS

NO.	DATE	REVISIONS

DRAWN: RWB
DESIGN: STK
QC: BEH
DATE: 05/01/14

SHEET I-11

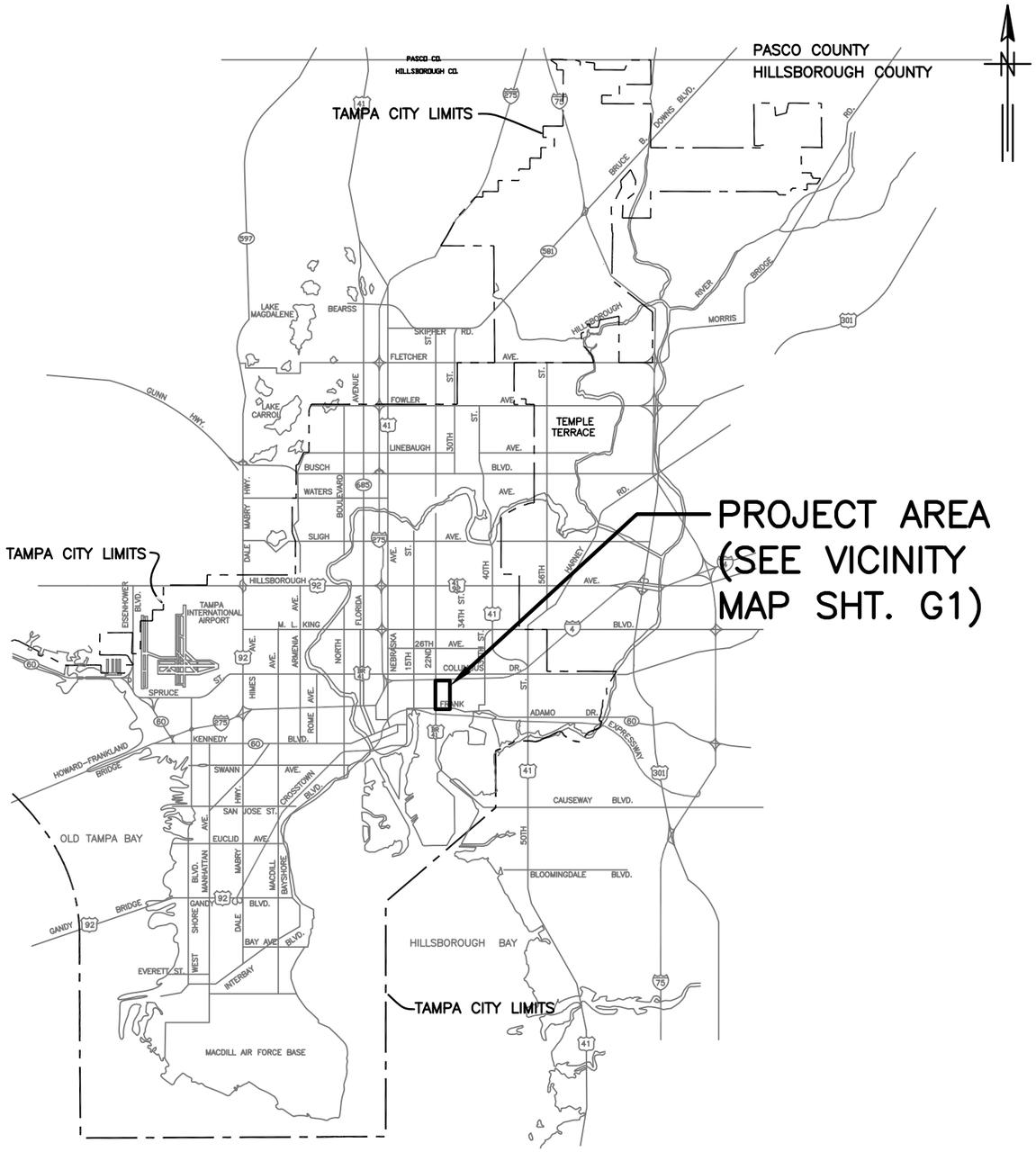

PLANS

FOR

CITY OF TAMPA FLORIDA WASTEWATER DEPARTMENT

FOR

THE CONSTRUCTION OF THE

YBOR PUMPING STATION REHABILITATION

JUNE 2011

P.E. NAME: DAVID C. HAGAN P.E. NO. 39163

P.E. NAME: _____

DATE: _____

GREELEY AND HANSEN
1715 NORTH WESTSHORE BLVD., STE. 464
TAMPA, FLORIDA 33607
CERTIFICATE OF AUTHORIZATION NO. 37

G1, 6/10/2011 11:35:06 AM

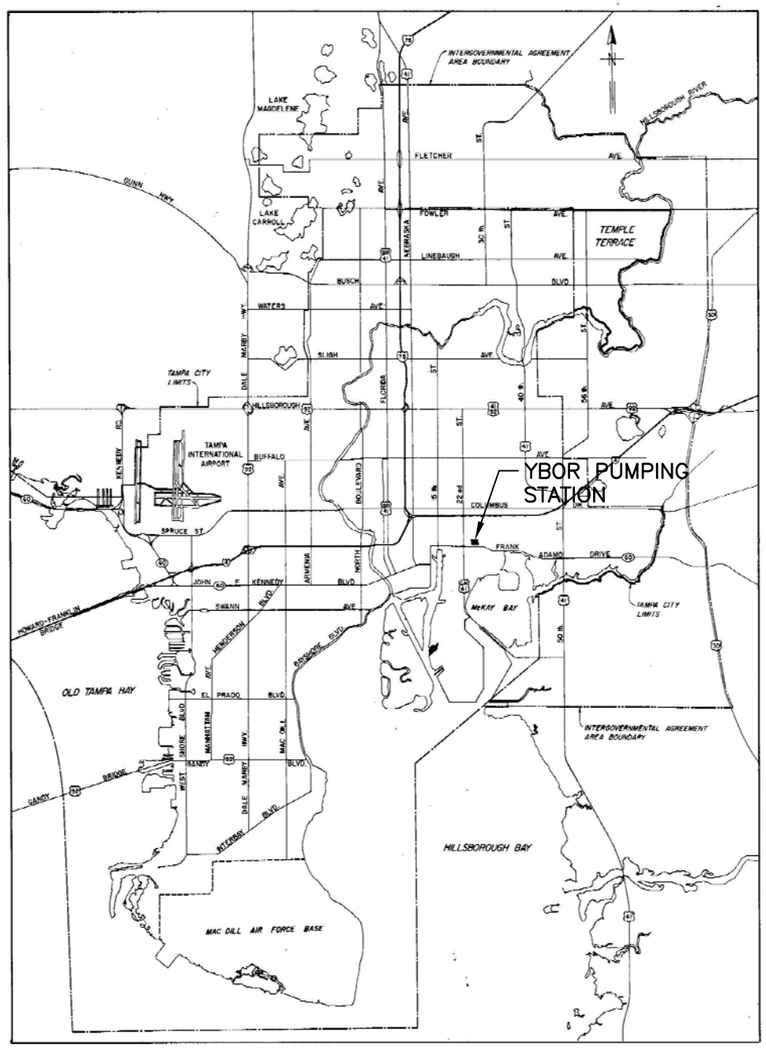

LOCATION MAP

NOT TO SCALE

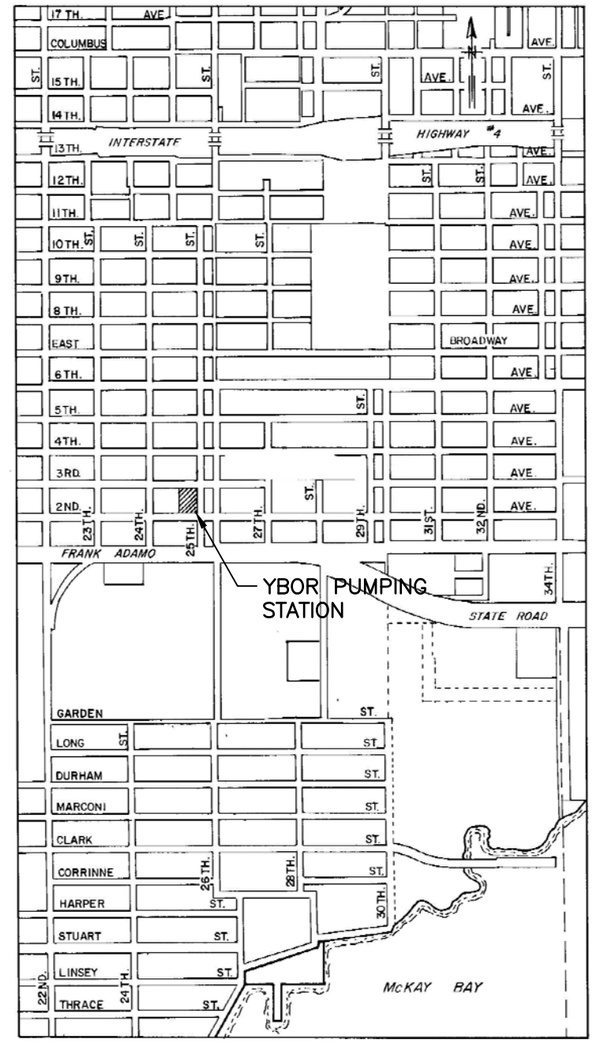

AREA MAP

NOT TO SCALE

INDEX

DESIGNATED SHEET NO.	TITLE
	COVER SHEET
GENERAL	
G1	LOCATION MAP, AREA MAP, INDEX
G2	GENERAL NOTES AND LEGEND
G3	SITE PLAN
G4	GENERAL DETAILS
G5	SECTION AND DETAILS
DEMOLITION	
D1	DEMOLITION PLAN FL EL 12.00'
D2	DEMOLITION PLAN – MEZZANINE
D3	DEMOLITION PLAN FL EL –15.00'
D4	DEMOLTION SECTION AND DETAILS
D5	DEMOLTION SECTION, DIAGRAM AND DETAILS
D6	DEMOLTION DETAILS
MECHANICAL	
M1	PIPING PLAN FL EL 12.00'
M2	PIPING PLAN – MEZZANINE
M3	PIPING PLAN FL EL –15.00'
M4	PIPING SECTIONS AND DETAILS
M5	TEMPERATURE CONTROL LAYOUT FL EL 12.00'
ELECTRICAL	
E1	LEGEND AND SYMBOLS
E2	SITE PLAN
E3	MAIN SERVICE SWITCHGEAR SES–1 – ONE LINE DIAGRAM
E4	MOTOR CONTROL CENTER – ONE LINE DIAGRAM
E5	MISCELLANEOUS DIAGRAMS
E6	CONTROL DIAGRAMS
E7	CONTROL DIAGRAMS
E8	CONTROL DIAGRAMS
E9	CONTROL DIAGRAMS
E10	POWER PLAN – FL EL 12.00'
E11	POWER PLAN – FL EL 0.00'
E12	POWER PLAN – FL EL –15.00'
E13	LIGHTING PLAN – FL EL 12.00'
E14	LIGHTING PLAN – FL EL 0.00'
E15	LIGHTING PLAN – FL EL –15.00'
E16	MISCELLANEOUS
E17	SCHEDULES
E18	SCHEDULES
E19	TYPICAL DETAILS
E20	GROUNDING PLAN
INSTRUMENTATION AND CONTROL	
I1	SYMBOLS AND NOMECLATURE
I2	P & ID
I3	P & ID AND MISCELLANEOUS DETAILS
I4	PANEL DETAILS

GREELEY AND HANSEN
1715 N. WESTSHORE BLVD., STE. 464
TAMPA, FLORIDA 33607
CERTIFICATE OF AUTHORIZATION NO. 37

DESIGNED FJB
DRAWN JMW
CHECKED DCH

NO.	DATE	APPD	REVISION

P.E. NAME: DAVID C. HAGAN P.E. NO. 39163
P.E. NAME:
DATE:

CITY OF TAMPA WASTEWATER DEPARTMENT
YBOR PUMPING STATION REHABILITATION

GENERAL

LOCATION MAP, AREA MAP AND INDEX

FILE: YBORG01

NO. G1

DATE JUNE 2011

G1, 6/21/2011 3:48:08 PM

GENERAL NOTES:

1. CONTRACTOR SHALL COORDINATE ALL CONSTRUCTION ACTIVITIES WITH THE ENGINEER AND THE CITY OF TAMPA WASTEWATER DEPARTMENT PERSONNEL PRIOR TO COMMENCING CONSTRUCTION ACTIVITIES.
2. ALL ELEVATIONS SHOWN ARE RELATIVE TO FINISHED FLOOR EL. 12.00.
3. EXISTING DIMENSIONS AND ELEVATIONS ARE BASED ON THE BEST INFORMATION AVAILABLE. TRUE DIMENSIONS AND ELEVATIONS SHALL BE DETERMINED IN THE FIELD PRIOR TO LAYOUT AND SHOP DRAWING SUBMITTALS.
4. ALL SUBMITTALS AND SHOP DRAWINGS SHALL BE ORIGINALS OR HIGH QUALITY COPIES (EASILY READABLE). NO FAXED SHEETS OR POOR QUALITY COPIES WILL BE ACCEPTED FOR SUBMITTAL REVIEW.
5. THE CONTRACTOR IS RESPONSIBLE FOR PROVIDING, INSTALLING, LEVELING AND ALIGNING MOTOR AND PUMP. PROCEDURES FOR INSTALLATION, AS OUTLINED IN THE HYDRAULICS INSTITUTE STANDARDS, MOST CURRENT EDITION, SHALL BE ADHERED TO. SEE SPECIFIC PROVISIONS. IF THERE IS A CONFLICT BETWEEN THE REQUIREMENTS OF THE CONTRACT SPECIFICATIONS AND THE HYDRAULIC INSTITUTE STANDARDS, THE MOST STRINGENT STANDARD SHALL BE FOLLOWED.
6. NEW AIR SUPPLY PIPING FOR PNEUMATICALLY ACTUATED PUMP–CHECK VALVES, AIR COMPRESSOR, AND AIR DRYER SHALL BE PROVIDED FROM EXISTING STATION AIR PIPING AS REQUIRED FOR THE LAY–OUT OF THE NEW EQUIPMENT. ISOLATION BALL VALVES AND PIPE UNIONS SHALL BE PROVIDED TO ALLOW REMOVAL OF EQUIPMENT. EXISTING VALVES AT THESE LOCATIONS SHALL BE REPLACED. ARRANGEMENT OF PIPING AND CONNECTIONS TO THE EXISTING PIPES SHALL BE MADE BY THE CONTRACTOR UNDER THE DIRECTION OF THE ENGINEER. PIPING SHALL BE TYPE K HARD DRAWN COPPER WITH CAST BRASS SOLDERED FITTINGS. ALL JOINTS SHALL BE THREADED OR SOLDERED. COPPER PIPE SHALL MEET THE REQUIREMENTS AND SHALL BE PAINTED IN ACCORDANCE WITH THE CONTRACT SPECIFICATIONS. ALL REMAINING EXISTING AIR PIPING INSIDE STATION SHALL BE CLEANED AND PAINTED.
7. PUMP ANCHOR BOLTS SHALL BE PER PUMP MANUFACTURER'S RECOMMENDATIONS. ANCHOR BOLTS SHALL BE DOUBLE–NUTTED AND SHALL HAVE SUFFICIENT LENGTH SO THAT THE BOLTS EXTEND BEYOND THE FASTENING NUTS BY A MINIMUM OF ½ INCH.
8. ALL HARDWARE, UNLESS OTHERWISE NOTED, SHALL BE TYPE 316 STAINLESS STEEL.
9. PROPOSED STEEL SPOOL PIECES AND FITTINGS (INCLUDING PUMP DISCHARGE AND SUCTIONS REDUCERS) SHALL BE FABRICATED TO SUIT THE DIMENSIONS OF THE PROPOSED EQUIPMENT OR LAYOUT, AND SHALL BE ASTM A 36 STEEL WITH A MINIMUM WALL THICKNESS OF ½ INCH STEEL PIPE SHALL BE LINED WITH COAL TAR EPOXY (MINIMUM 3/32" THICK) IN ACCORDANCE WITH AWWA C203. FABRICATED STEEL FITTINGS SHALL BE MANUFACTURED BY AN AWWA CERTIFIED FABRICATOR.
10. ALL FIELD WELDS SHALL CONFORM TO PROCEDURES OUTLINED IN AWWA M 11 AND AWWA C 206.
11. CONTRACTOR SHALL PROCURE THE SERVICES OF AN INDEPENDENT CERTIFIED WELD INSPECTOR TO TEST ALL FIELD WELDS. CERTIFIED WELL INSPECTOR SHALL PERFORM AS A MINIMUM A VISUAL INSPECTION AND EITHER A DYE PENETRATING TINT OR MAG PARTICLE TEST TO ASSERT QUALITY OF FIELD WELDS.
12. BURIED DUCTILE IRON PIPE SHALL BE MINIMUM PRESSURE CLASS 200 AND SHALL A HAVE CEMENT MORTAR LINING, EXCEPT WHERE REQUIRED TO HAVE CERAMIC EPOXY LINING. ALL FITTINGS, BENDS AND VALVES FOR THIS PIPELINE SHALL BE POLYETHYLENE ENCASED AND INSTALLED USING CLASS C BEDDING, UNLESS OTHERWISE SHOWN OR DIRECTED.
13. EXPOSED DUCTILE IRON PIPE SHALL BE FLANGED, MINIMUM CLASS 53 AND SHALL HAVE CERAMIC EPOXY LINER.
14. THE CONTRACTOR SHALL INSTALL THE FORCE MAIN TO THE ELEVATIONS AND SLOPES SHOWN ON THE DRAWINGS. THERE SHALL BE NO INTERMEDIATE HIGH OR LOW POINTS BETWEEN V.P.I.'S.
15. ALL CONCRETE AND GROUT, UNLESS OTHERWISE SPECIFIED, SHALL BE CLASS "B" WITH A 28 DAY COMPRESSIVE STRENGTH OF 4,000 PSI.
16. ALL STEEL REINFORCING SHALL BE DETAILED ACCORDING TO THE LATEST " ACI MANUAL OF STANDARD PRACTICE FOR DETAILING REINFORCED CONCRETE STRUCTURES." ACTUAL PLACEMENT OF STEEL REINFORCING SHALL BE SHOWN ON SHOP DRAWINGS. ALL LAPS AND SPLICES SHALL BE AT LEAST 32 BAR DIAMETERS OR 24 INCHES.

DEMOLITION NOTES:

1. ALL DIMENSIONS ARE APPROXIMATE. ACTUAL DIMENSIONS SHALL BE DETERMINED IN THE FIELD.
2. SALVAGEABLE MATERIALS AS DETERMINED BY THE WASTEWATER DEPARTMENT PERSONNEL SHALL BE DELIVERED TO THE CITY OF TAMPA'S HOWARD F. CURREN AWTP AT 2700 MARITIME BOULEVARD. NON–SALVAGEABLE MATERIALS ARE TO BE REMOVED FROM THE SITE AND PROPERLY DISPOSED OF AT THE CONTRACTOR'S EXPENSE. IN GENERAL, ALL PUMP AND CONTROLS EQUIPMENT SHALL REMAIN PROPERTY OF THE CITY AND SHALL BE DELIVERED TO THE TREATMENT PLANT.REFER TO SPECIFIC PROVISIONS.
3. CONSTRACTOR SHALL CUT ALL EXPOSED REINFORCING STEEL TO A DEPTH OF 1–INCH BELOW THE EXPOSED SURFACE AND THE OPENING SHALL BE SEALED WITH GROUT.

LEGEND

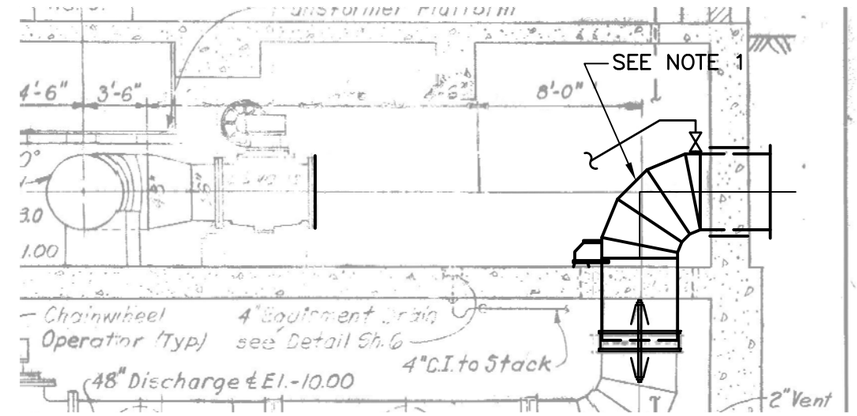

NOTES:

1. ALL WORK INCLUDED IN THIS CONTRACT IS SHOWN IN BOLD. LIGHT LINEWEIGHT INDICATES BACKGROUND INFORMATION, EXCEPT WHERE NOTED OTHERWISE IN THESE PLANS BY BOLD ANNOTATION.

GREELEY AND HANSEN
1715 N. WESTSHORE BLVD., STE. 464
TAMPA, FLORIDA 33607
CERTIFICATE OF AUTHORIZATION NO. 37

DESIGNED	FJB
DRAWN	JMW
CHECKED	DCH

NO.	DATE	APPD	REVISION

P.E. NAME: DAVID C. HAGAN P.E. NO. 39163
P.E. NAME:
DATE:

CITY OF TAMPA WASTEWATER DEPARTMENT
YBOR PUMPING STATION REHABILITATION

GENERAL

GENERAL NOTES AND LEGEND

FILE: YBORG02

NO. G2

DATE JUNE 2011

G2, 6/21/2011 9:35:05 AM

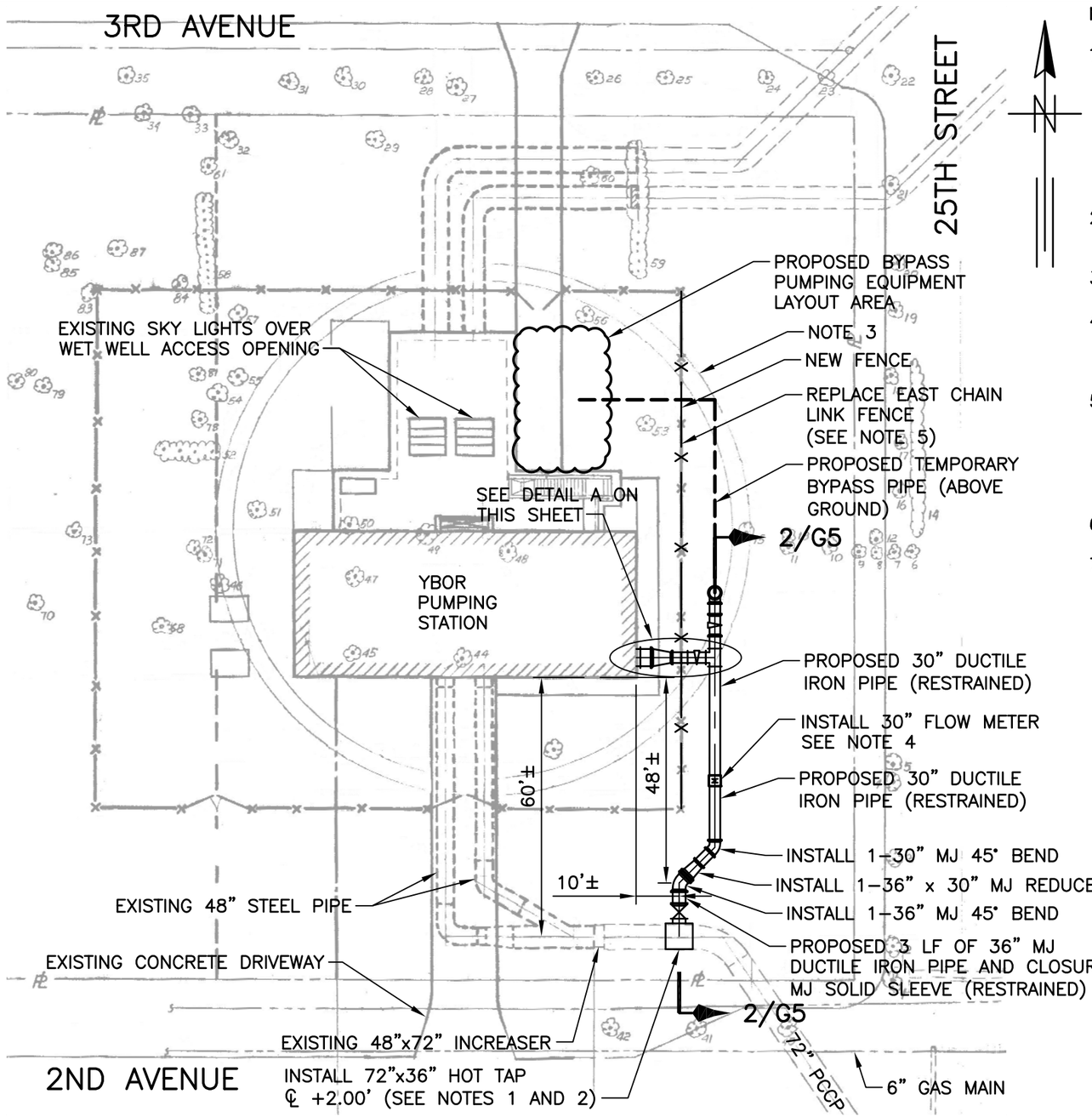

SITE PLAN

SCALE: 1" = 30'

NOTES:

1. FIELD LOCATE JOINT ON EXISTING PCCP SEGMENT ADJACENT TO PCCP BEND. INSTALL TYPE 2 JCM 415 TAPPING SADDLE FOR PCCP OR APPROVED EQUAL WITH EDGE OF SADDLE NO LESS THAN 3 FEET FROM PCCP JOINT. HYDROSTATICALLY TEST SADDLE AT NO MORE THAN 10 PSI PRIOR TO CUTTING INTO THE STEEL CYLINDER OF THE PCCP PIPE. CENTERLINE OF 72" PIPE APPROXIMATELY 8' BELOW GRADE. INSTALL INSULATING FLANGE KIT ON THE FLANGE JOINT BETWEEN THE TAPPING SADDLE AND TAPPING VALVE. SEE SHEET G4 FOR DETAILS.
2. THE PCCP HOT TAP SHALL BE PERFORMED BY A SPECIALTY SUBCONTRACTOR, APPROVED BY THE ENGINEER, WITH A MINIMUM OF THREE YEARS OF EXPERIENCE IN SIMILAR WORK.
3. REMNANTS OF ORIGINAL COFFERDAM SYSTEM MAY BE PRESENT AND MAY BE REMOVED.
4. INSTALL 30" MAGMETER SO THAT CLOSEST FITTING IS LOCATED APPROXIMATELY TEN PIPE DIAMETERS UPSTREAM AND FIVE DIAMETERS DOWNSTREAM. INSTALL THE ELECTRICAL JUNCTION BOX INSIDE THE BUILDING.
5. REPLACE CHAIN LINK FENCE ON THE EAST SIDE OF THE PUMP STATION FROM CORNER POST TO CORNER POST. ANY OTHER PORTION OF THE FENCE DISMANTLED FOR THE PURPOSES OF CONSTRUCTION, ACCESS OR ELECTRICAL WORK SHALL BE REPLACED BETWEEN NEAREST ANCHORING POSTS. THE CONTRACTOR SHALL PROVIDE TEMPORARY FENCING DURING CONSTRUCTION FOR SECURITY PURPOSES.
6. GRADE IN AREA OF NEW PIPE IS APPROXIMATELY EL 11.00'.
7. REPLACE IN KIND ALL DISTURBED LANDSCAPING.

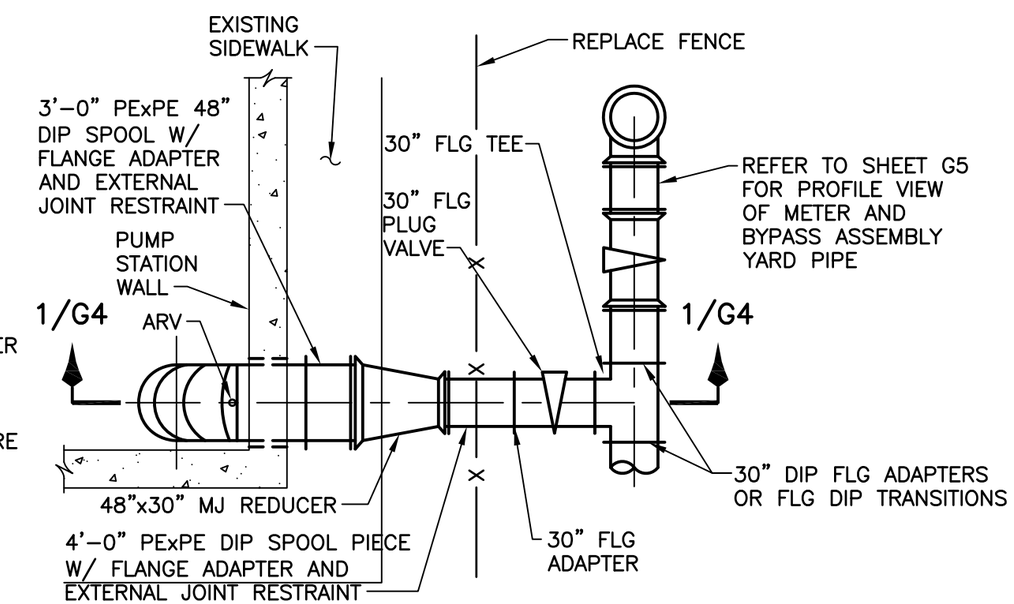

DETAIL A

SCALE: 1/8" = 1'-0"

GREELEY AND HANSEN
1715 N. WESTSHORE BLVD., STE. 464
TAMPA, FLORIDA 33607
CERTIFICATE OF AUTHORIZATION NO. 37

0 15 30 60
SCALE IN FEET

DESIGNED	FJB
DRAWN	JMW
CHECKED	DCH

NO.	DATE	APPD	REVISION

P.E. NAME: DAVID C. HAGAN P.E. NO. 39163

P.E. NAME:
DATE:

CITY OF TAMPA WASTEWATER DEPARTMENT
YBOR PUMPING STATION REHABILITATION

GENERAL

SITE PLAN

FILE: YBORG03

NO. G3

DATE JUNE 2011

G3, 6/16/2011 9:42:58 AM

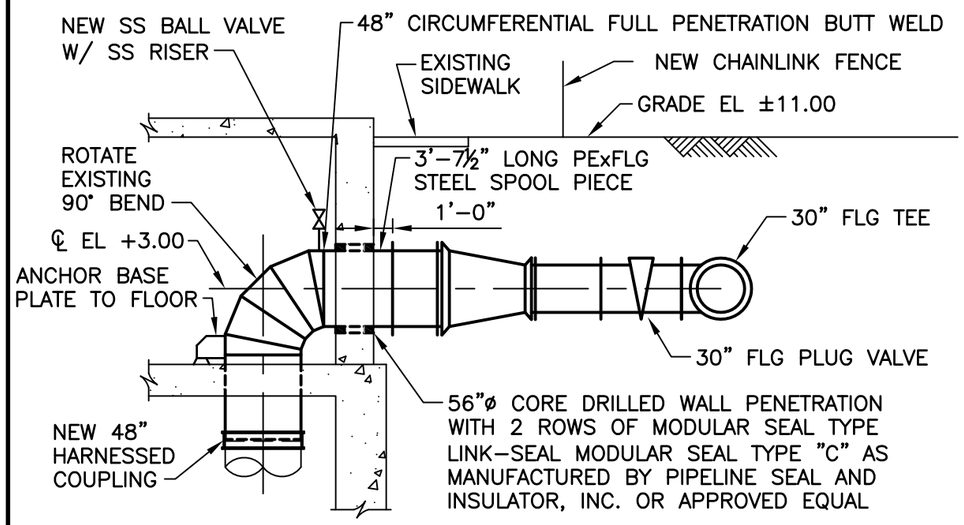

SECTION 1/G3

SCALE: 1/8" = 1'-0"

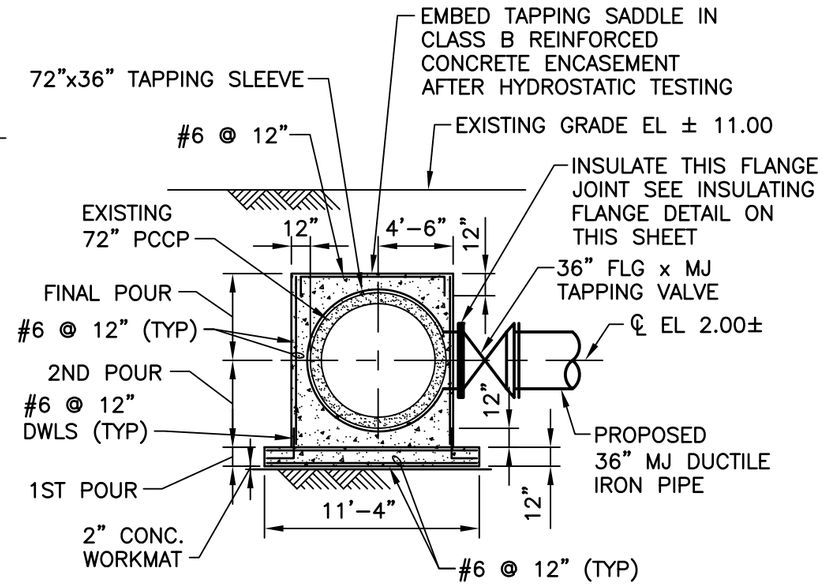

NOTES:

1. CONTRACTOR SHALL PROVIDE ADEQUATE TEMPORARY SUPPORT TO EXISTING PIPE WHILE THE NEW SUPPORT SLAB IS BEING CONSTRUCTED. CONTRACTOR SHALL SUBMIT SHOP DRAWING, INDICATING INSTALLATION PROCEDURES FOR APPROVAL PRIOR TO INITIATING THE WORK.
2. CONTRACTOR SHALL TAKE EXTREME CARE CONSTRUCTING NEW SUPPORT SLAB AND ENCASEMENT IN ORDER TO PREVENT ANY DAMAGE TO EXISTING PIPE. ALL THE ABOVE WORK SHALL BE DONE IN THE PRESENCE OF THE ENGINEER.
3. THE SUPPORT SLAB MAY BE CONSTRUCTED IN SECTIONS WITH KEYWAY JOINTS AND WITH REINFORCING LAPPED 2' MIN.
4. ALL CONCRETE SHALL BE CLASS B.
5. EXTEND CONCRETE ENCASEMENT A MINIMUM OF 12" AROUND TAPPING SADDLE, EXCEPT FOR NORTH FACE AS SHOWN TO PERMIT ASSEMBLY OF INSULATING FLANGE JOINT. CONCRETE ENCASEMENT SHALL EXTEND A MINIMUM OF 12" EAST AND WEST OF THE TAPPING SADDLE.

DETAIL OF PIPE CONNECTION TO EXISTING 72" PCCP

SCALE: 1/8" = 1'-0"

0 4 8 16

SCALE IN FEET

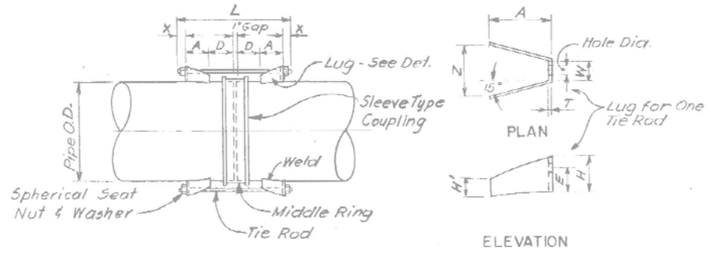

HARNESS ASSEMBLY

NOT TO SCALE

DETAIL OF LUG

NOT TO SCALE

PIPE SIZE	WALL THICKNESS	PIPE O.D.	MIDDLE RING CPLG. LENGTH	MIDDLE RING CPLG. THICKNESS	HARNESS TIE RODS No.	DIA.	X	L	Y	THREADS-IN	COUPLING JOINT LOCATION	TEST PRESS. (Psi)
48"	½"	49"	10"	½"	2	1⅛	2 3/16"	50¾"	3⅛	8	Disch. Header	75

DETAILS OF HARNESSED SLEEVE – TYPE COUPLING JOINT

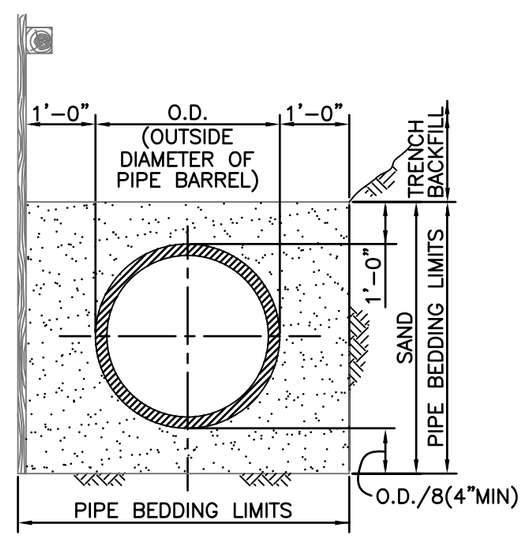

CLASS C PIPE BEDDING

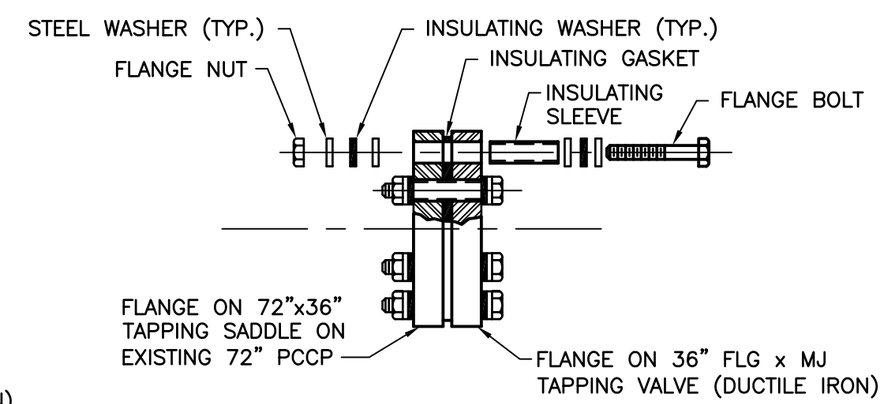

INSULATING FLANGE

NOT TO SCALE

GREELEY AND HANSEN
1715 N. WESTSHORE BLVD., STE. 464
TAMPA, FLORIDA 33607
CERTIFICATE OF AUTHORIZATION NO. 37

SCALE: AS SHOWN

NO.	DATE	APPD	REVISION

DESIGNED FJB
DRAWN JMW
CHECKED DCH

P.E. NAME: DAVID C. HAGAN P.E. NO. 39163

P.E. NAME:
DATE:

CITY OF TAMPA WASTEWATER DEPARTMENT
YBOR PUMPING STATION REHABILITATION

GENERAL

GENERAL DETAILS

FILE: YBORG04

NO. G4

DATE JUNE 2011

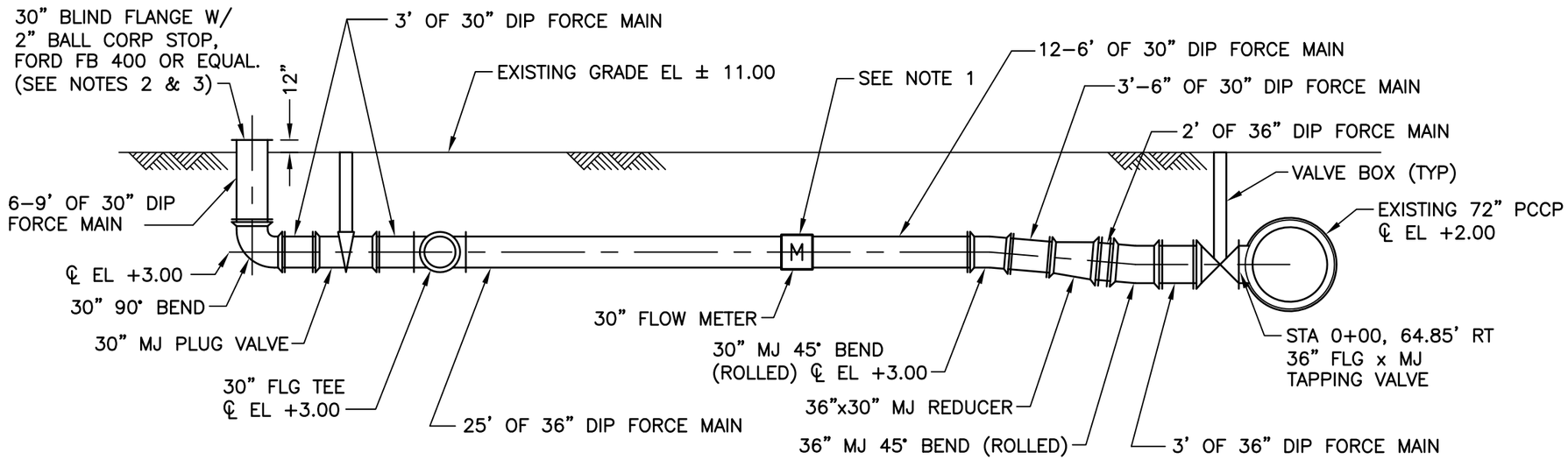

SECTION 2/G3

SCALE: 3/32" = 1'-10'

NOTES:

1. INSTALL METER CONVERTER/TRANSMITTER INSIDE PUMP STATION.
2. LINE INTERIOR FACE OF PERMANENT BLIND FLANGE AND VERTICAL RISER OF ASSEMBLY WITH CERAMIC EPOXY AS SPECIFIED.
3. PAINT ALL ABOVE GROUND DIP PIPING AS SPECIFIED.

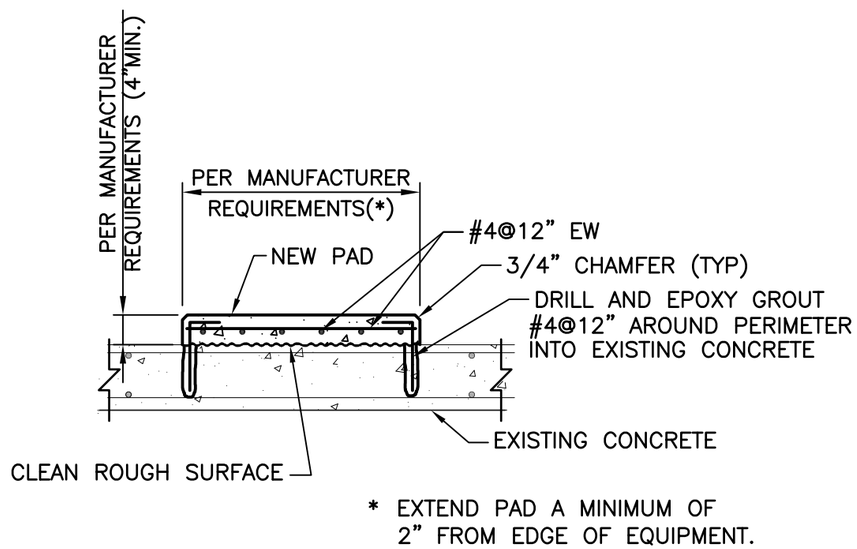

NEW EQUIPMENT PAD ON EXISTING SLAB DETAIL

NOT TO SCALE

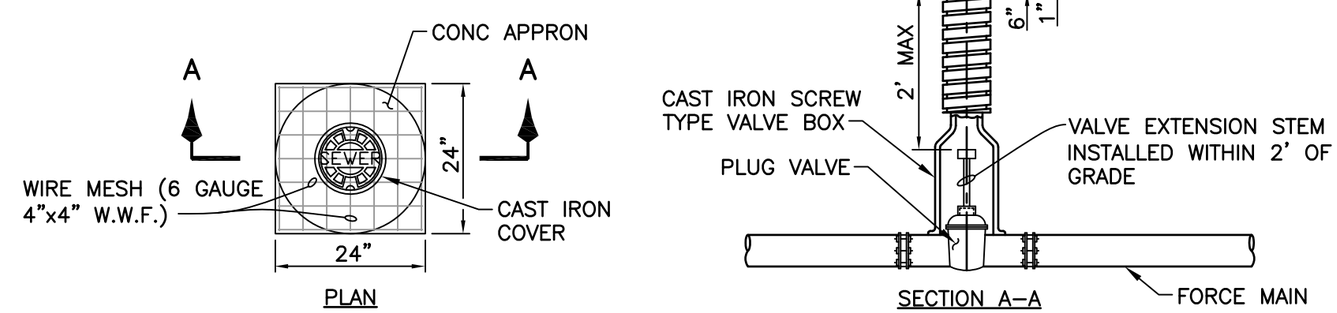

VALVE BOX DETAIL

NOT TO SCALE

G5, 6/20/2011 5:17:43 PM

GREELEY AND HANSEN
1715 N. WESTSHORE BLVD., STE. 464
TAMPA, FLORIDA 33607
CERTIFICATE OF AUTHORIZATION NO. 37

0 4 8 16
SCALE IN FEET

DESIGNED	FJB
DRAWN	JMW
CHECKED	DCH

NO.	DATE	APPD	REVISION

P.E. NAME: DAVID C. HAGAN P.E. NO. 39163

P.E. NAME:

DATE:

CITY OF TAMPA WASTEWATER DEPARTMENT
YBOR PUMPING STATION REHABILITATION

GENERAL

SECTION AND DETAILS

FILE: YBORG05

NO. G5

DATE JUNE 2011

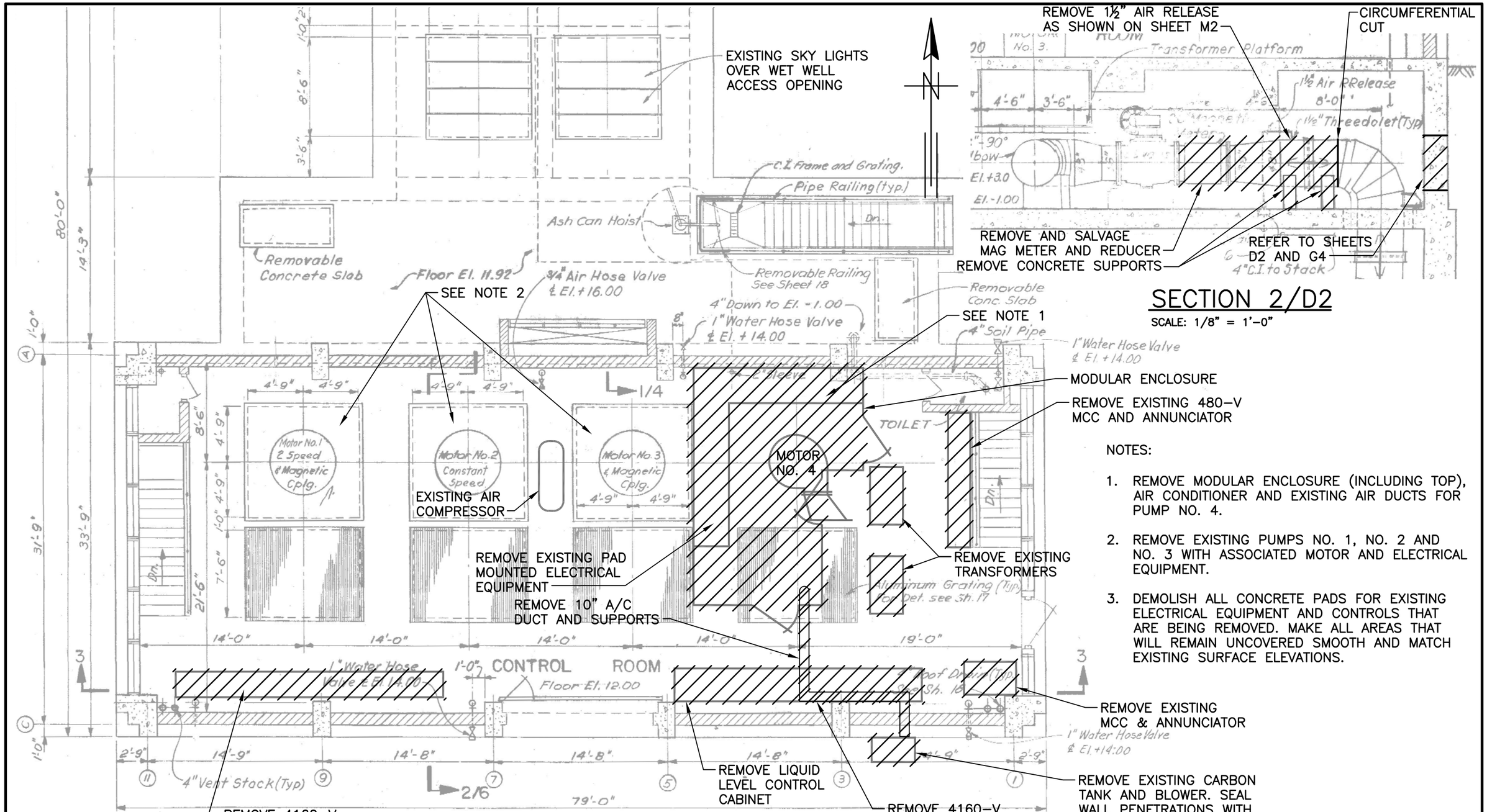

SECTION 2/D2

SCALE: 1/8" = 1'-0"

DEMOLITION PLAN EL 12.00

SCALE: 1/8" = 1'-0"

NOTES:

1. REMOVE MODULAR ENCLOSURE (INCLUDING TOP), AIR CONDITIONER AND EXISTING AIR DUCTS FOR PUMP NO. 4.
2. REMOVE EXISTING PUMPS NO. 1, NO. 2 AND NO. 3 WITH ASSOCIATED MOTOR AND ELECTRICAL EQUIPMENT.
3. DEMOLISH ALL CONCRETE PADS FOR EXISTING ELECTRICAL EQUIPMENT AND CONTROLS THAT ARE BEING REMOVED. MAKE ALL AREAS THAT WILL REMAIN UNCOVERED SMOOTH AND MATCH EXISTING SURFACE ELEVATIONS.

GREELEY AND HANSEN
1715 N. WESTSHORE BLVD., STE. 464
TAMPA, FLORIDA 33607
CERTIFICATE OF AUTHORIZATION NO. 37

0 4 8 16
SCALE IN FEET

DESIGNED	FJB
DRAWN	JMW
CHECKED	DCH

NO.	DATE	APPD	REVISION

P.E. NAME: DAVID C. HAGAN P.E. NO. 39163
P.E. NAME:
DATE:

CITY OF TAMPA WASTEWATER DEPARTMENT
YBOR PUMPING STATION REHABILITATION

DEMOLITION

DEMOLITION PLAN FL EL 12.00'

FILE: YBORD01

NO. D1

DATE JUNE 2011

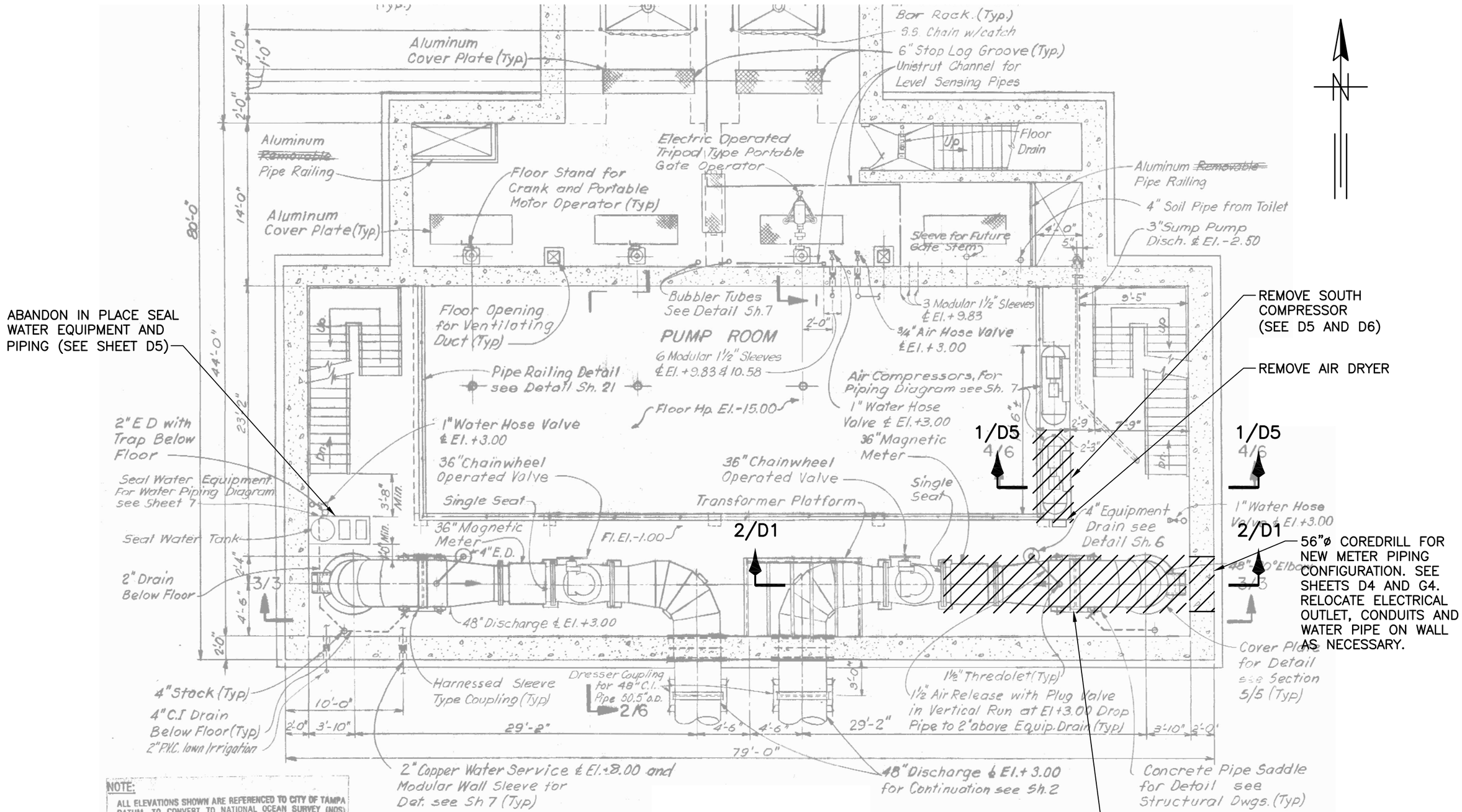

SECTIONAL PLAN

SCALE: 1/8"=1'-0"

D2, 6/16/2011 9:54:19 AM

GREELEY AND HANSEN
1715 N. WESTSHORE BLVD., STE. 464
TAMPA, FLORIDA 33607
CERTIFICATE OF AUTHORIZATION NO. 37

0 4 8 16
SCALE IN FEET

DESIGNED	FJB
DRAWN	JMW
CHECKED	DCH

NO.	DATE	APPD	REVISION

P.E. NAME: DAVID C. HAGAN P.E. NO. 39163
P.E. NAME:
DATE:

CITY OF TAMPA WASTEWATER DEPARTMENT
YBOR PUMPING STATION REHABILITATION

DEMOLITION

DEMOLITION PLAN – MEZZANINE

FILE: YBORD02
NO. D2
DATE JUNE 2011

NOTES:

1. REMOVE EXISTING PUMPS NO. 1, NO. 2 AND NO. 3 WITH ASSOCIATED MOTOR AND ELECTRICAL EQUIPMENT.
2. REMOVE EXISTING 36" DISCHARGE PLUG VALVE AND PNEUNATIC ACTUATOR FOR ALL FOUR PUMPS.

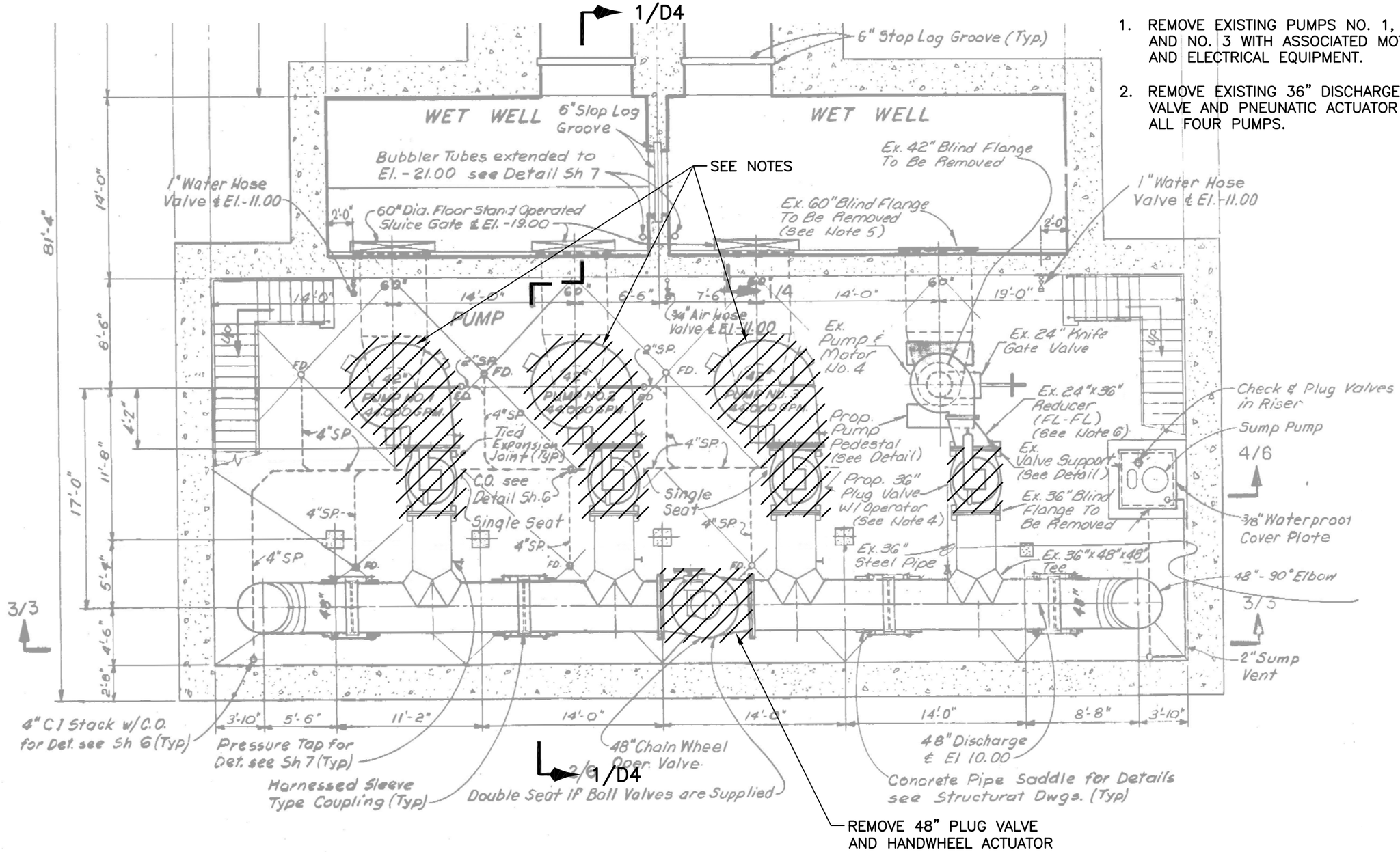

DEMOLITION PLAN EL –15.0

SCALE: 1/8"=1'–0"

D3, 6/16/2011 9:57:09 AM

GREELEY AND HANSEN 1715 N. WESTSHORE BLVD., STE. 464 TAMPA, FLORIDA 33607 CERTIFICATE OF AUTHORIZATION NO. 37	0 4 8 16 SCALE IN FEET DESIGNED FJB DRAWN JMW CHECKED DCH	NO. DATE APPD REVISION P.E. NAME: DAVID C. HAGAN P.E. NO. 39163 P.E. NAME: DATE:	CITY OF TAMPA WASTEWATER DEPARTMENT YBOR PUMPING STATION REHABILITATION DEMOLITION DEMOLITION PLAN FL EL –15.00'

FILE: YBORD03

NO. D3

DATE JUNE 2011

NOTES:

1. REMOVE PUMP, MOTOR, EXTENDED SHAFT, AND PLUG VALVE WITH ACTUATOR FOR PUMPS NO. 1, 2 AND 3.
2. REMOVE MOTOR (CLOSE COUPLED) AND PLUG VALVE WITH ACTUATOR AT PUMP NO. 4.
3. REMOVE EXISTING PUMP ISOLATION SLUICE GATES AND OPERATORS FOR PUMPS NO. 1, NO. 2 AND NO. 3. SLUICE GATE FRAMES TO REMAIN.

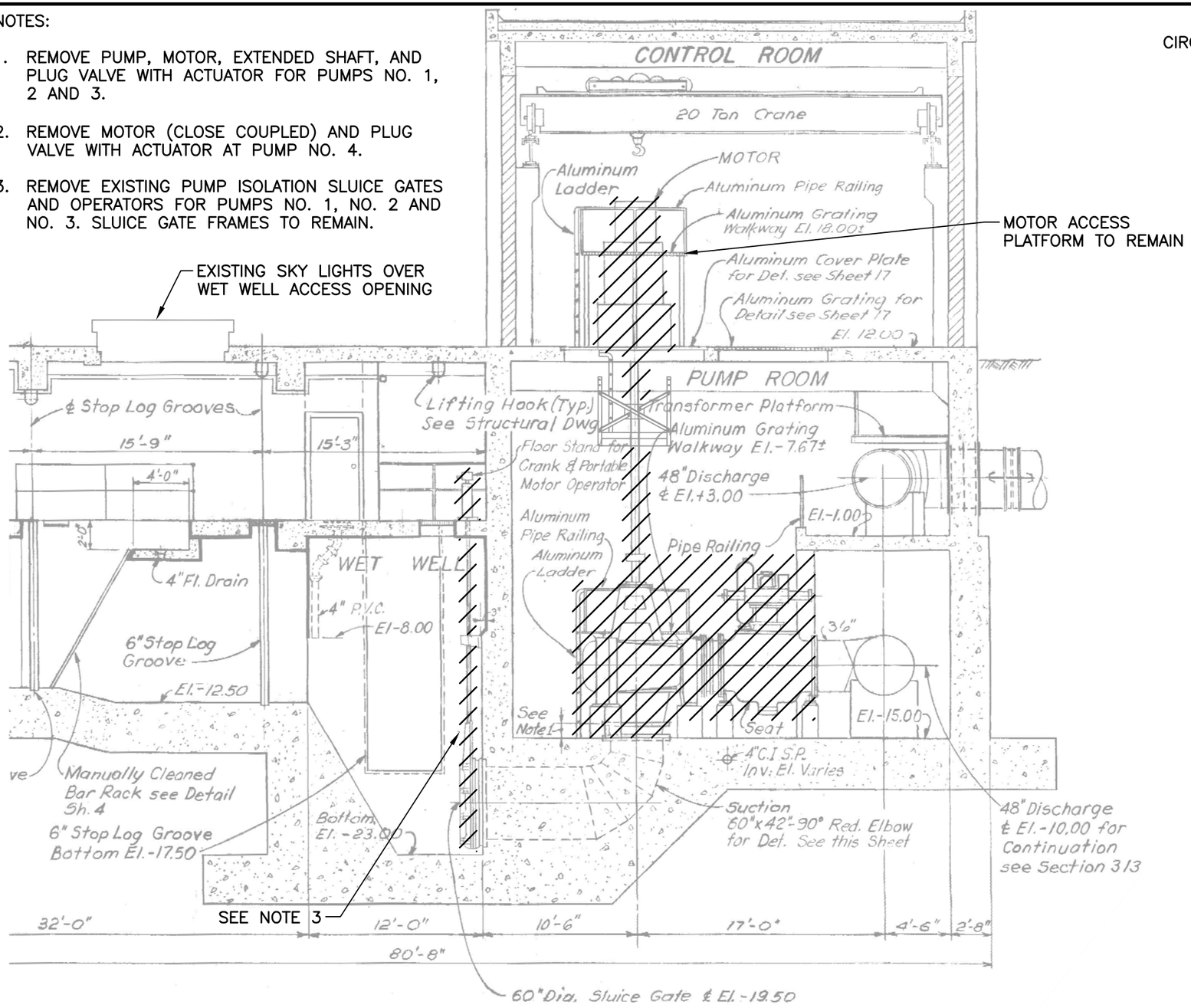

DEMOLITION SECTION 1/D3

SCALE: 1/8" = 1'-0"

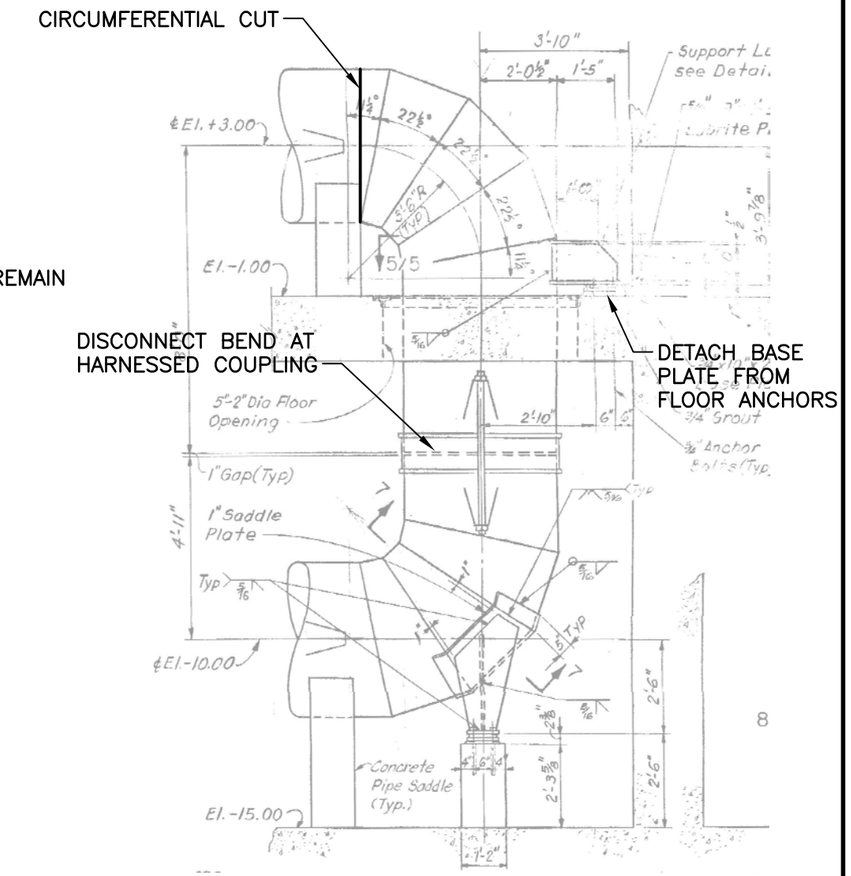

BEND DISASSEMBLY DETAIL

SCALE: 1/4" = 1'-0"

8

D4, 6/16/2011 1:43:24 PM

GREELEY AND HANSEN
1715 N. WESTSHORE BLVD., STE. 464
TAMPA, FLORIDA 33607
CERTIFICATE OF AUTHORIZATION NO. 37

0 4 8 16
SCALE IN FEET

DESIGNED	FJB
DRAWN	JMW
CHECKED	DCH

NO.	DATE	APPD	REVISION

P.E. NAME: DAVID C. HAGAN P.E. NO. 39163

P.E. NAME:

DATE:

CITY OF TAMPA WASTEWATER DEPARTMENT
YBOR PUMPING STATION REHABILITATION

DEMOLITION

DEMOLITION SECTION AND DETAILS

FILE: YBORD04

NO. D4

DATE JUNE 2011

NOTES:

1. ABANDON IN PLACE SEAL WATER SYSTEM AND PIPING.
2. REMOVE PIPING ASSOCIATED WITH REMOVED EQUIPMENT AND THAT OBSTRUCTS WORKING AREA OR WALKING AREA.

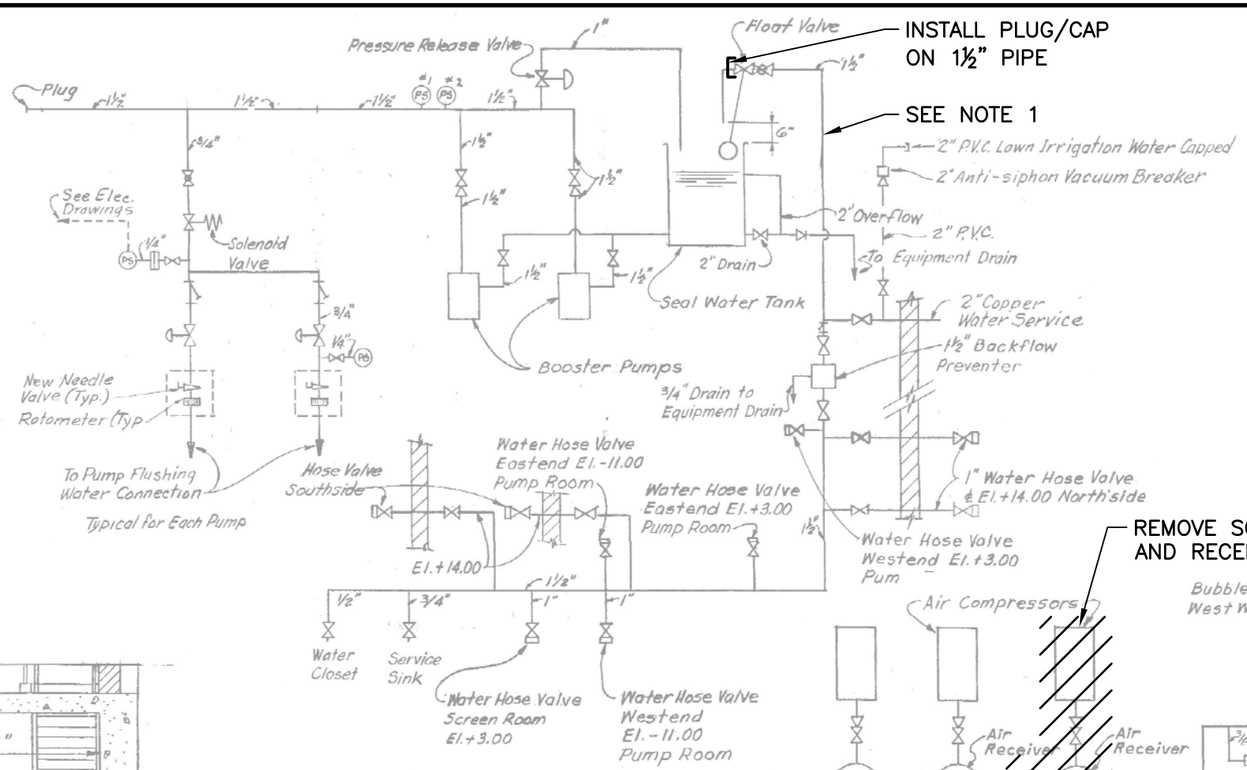

WATER PIPING DIAGRAM

NOT TO SCALE

LEGEND

- Globe Valve
- Gate Valve
- Hose Valve
- Check Valve
- Pressure Switch
- Flow Switch
- Pressure Gage
- Manual Air Switch See Diagram this Sheet

MODULAR WALL SLEEVE SEALING SCHEDULE								
Service	Nom Pipe Dia.	Actual Pipe OD Dim. A	Pipe Sleeve Nom Dia.	Pipe Sleeve I.D. Dim. B	Link Seal Model	Links Per Seal	Dim. C	Remarks
Level Sensing Pipe	3/8"	0.5"	1½"	1.610"	LS200C	3	7"	Copper
Air Pipe	¾"	0.875"	2"	2.067"	LS200C	4	7"	Copper
Water Hose Pipe	¾"	0.875"	2"	2.067"	LS200C	4	7"	Copper
City Water	1½"	1.625"	3"	3.068"	LS300C	4	8"	Copper

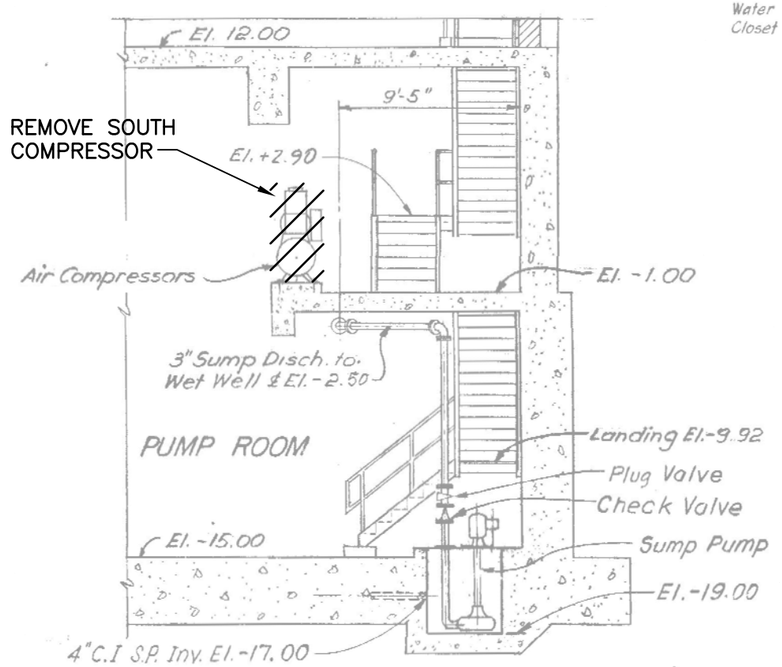

DEMOLITION SECTION 1/D2

SCALE: 3/32" = 1'-0"

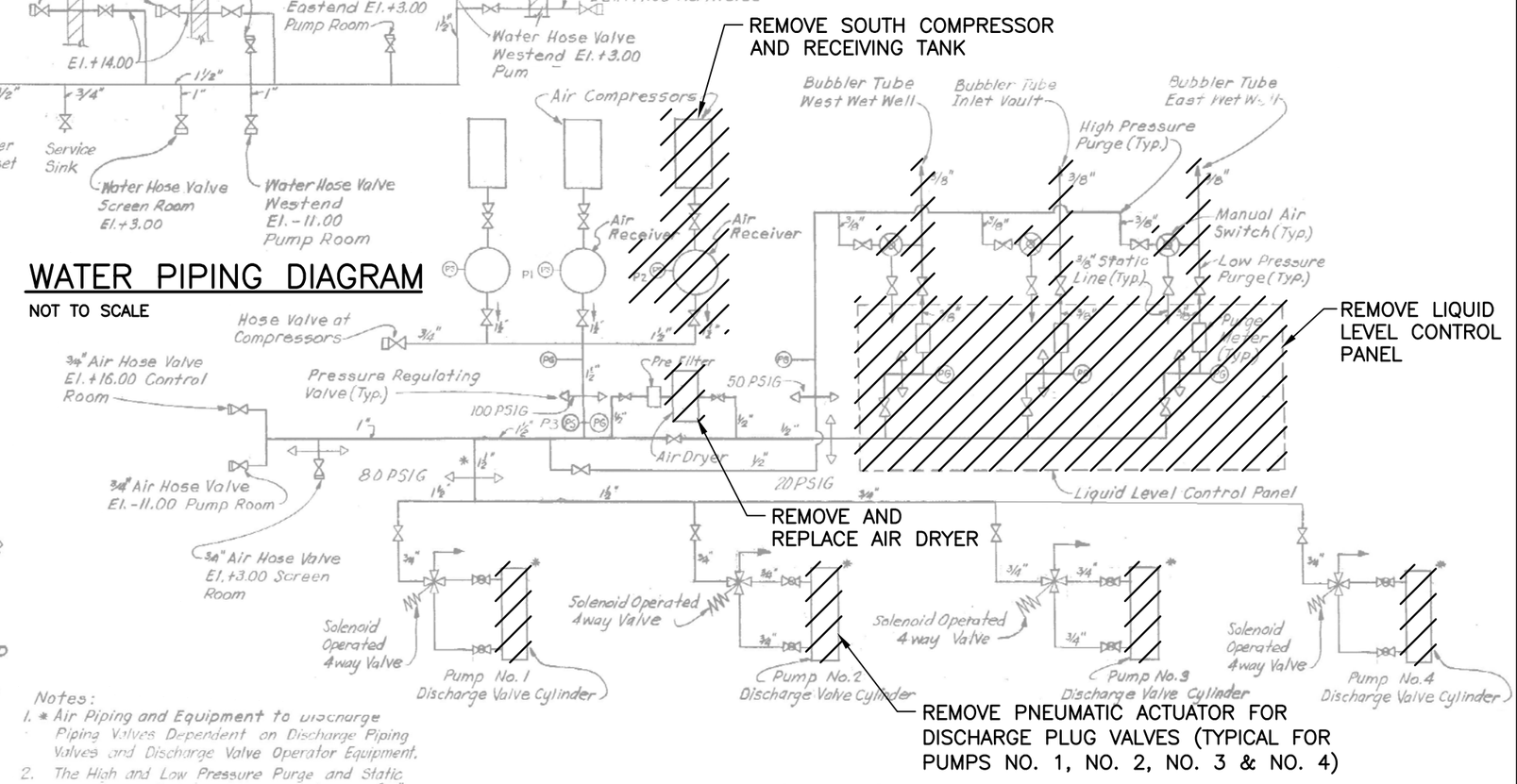

Notes:

1. * Air Piping and Equipment to discharge Piping Valves Dependent on Discharge Piping Valves and Discharge Valve Operator Equipment.
2. The High and Low Pressure Purge and Static Air Lines in the Screen Room shall be 3/8" Polyethene Tubing run inside Stainless Steel Unistrut type Supports.

AIR PIPING DIAGRAM

NOT TO SCALE

D5, 6/16/2011 10:35:53 AM

GREELEY AND HANSEN
1715 N. WESTSHORE BLVD., STE. 464
TAMPA, FLORIDA 33607
CERTIFICATE OF AUTHORIZATION NO. 37

0 4 8 16
SCALE IN FEET

DESIGNED	FJB
DRAWN	JMW
CHECKED	DCH

NO.	DATE	APPD	REVISION

P.E. NAME: DAVID C. HAGAN P.E. NO. 39163

P.E. NAME: _____

DATE: _____

CITY OF TAMPA WASTEWATER DEPARTMENT
YBOR PUMPING STATION REHABILITATION

DEMOLITION

DEMOLITION SECTION, DIAGRAM AND DETAILS

FILE: YBORD05

NO. D5

DATE JUNE 2011

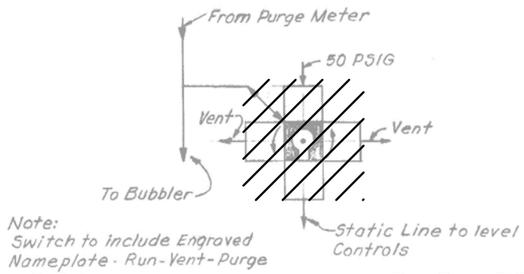

DIAGRAM – MANUAL AIR SWITCH

NOT TO SCALE

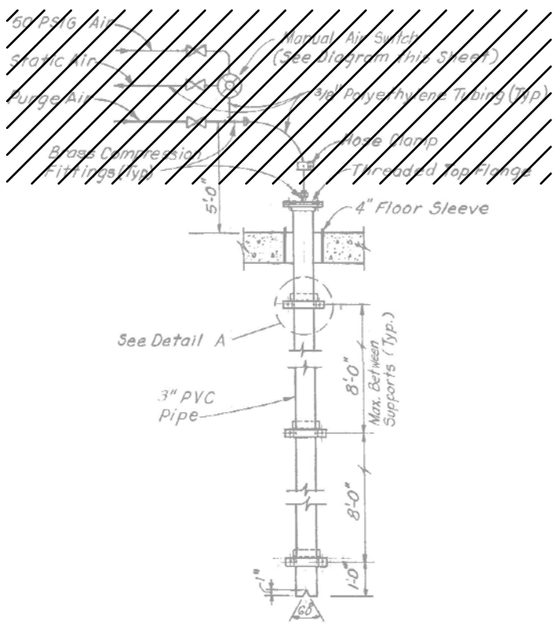

DETAIL – BUBBLER TUBE

NOT TO SCALE

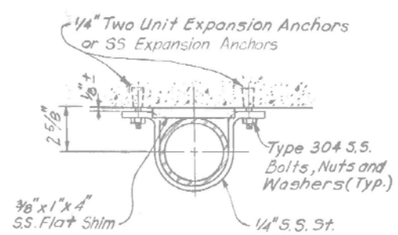

DETAIL A

NOT TO SCALE

NOTES:

1. REMOVE EXISTING PIPE CONNECTING TO THE PVC BUBBLER TUBE AND SWITCH. PVC BUBBLER TUBE TO REMAIN.

D6, 6/10/2011 11:15:01 AM

GREELEY AND HANSEN
1715 N. WESTSHORE BLVD., STE. 464
TAMPA, FLORIDA 33607
CERTIFICATE OF AUTHORIZATION NO. 37

NO SCALE

DESIGNED	FJB
DRAWN	JMW
CHECKED	DCH

NO.	DATE	APPD	REVISION

P.E. NAME: DAVID C. HAGAN P.E. NO. 39163

P.E. NAME: _____

DATE: _____

CITY OF TAMPA WASTEWATER DEPARTMENT
YBOR PUMPING STATION REHABILITATION

DEMOLITION

DEMOLITION DETAILS

FILE: YBORD05

NO. D6

DATE JUNE 2011

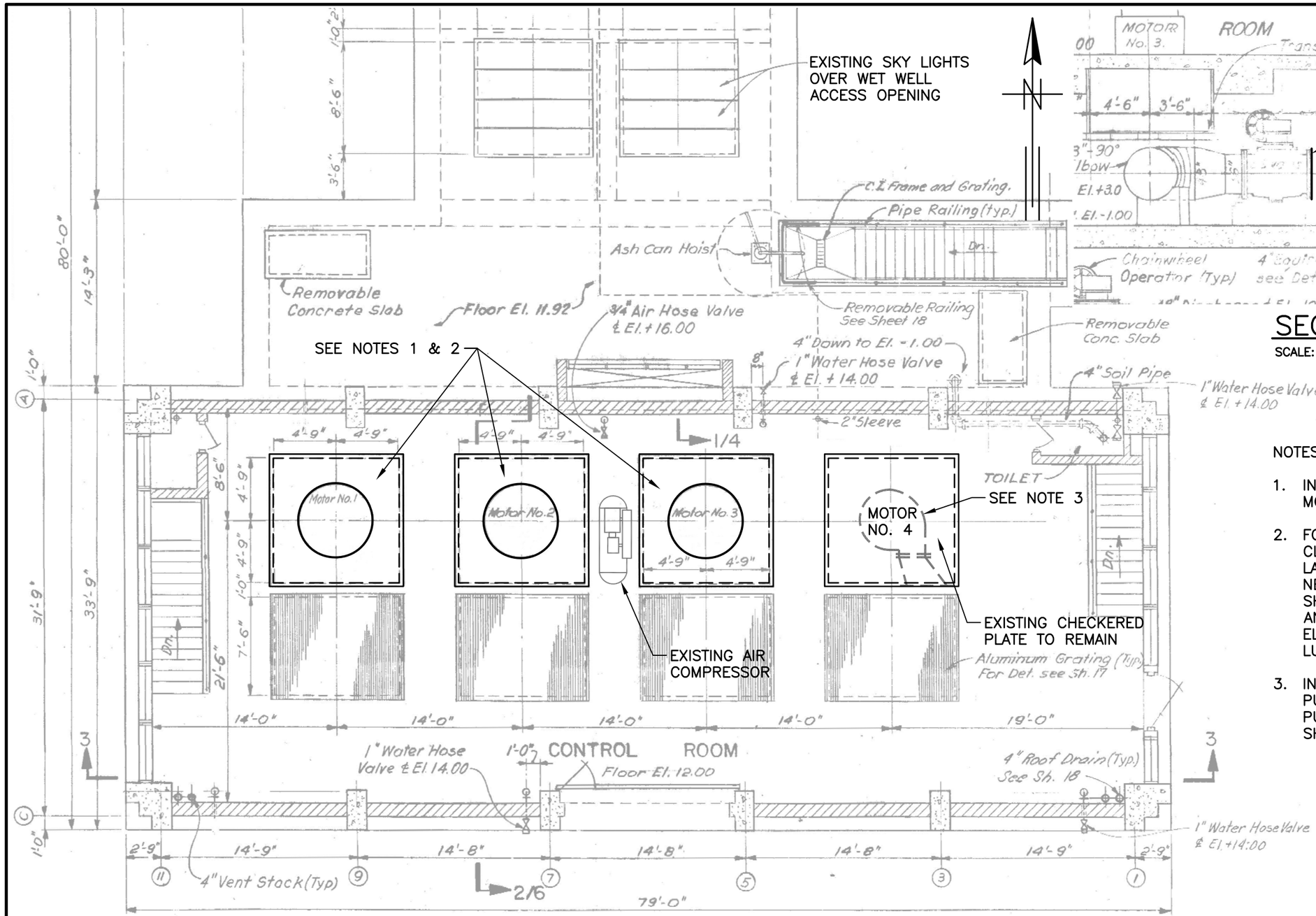

PIPING PLAN EL 12.0

SCALE: 1/8" = 1'-0"

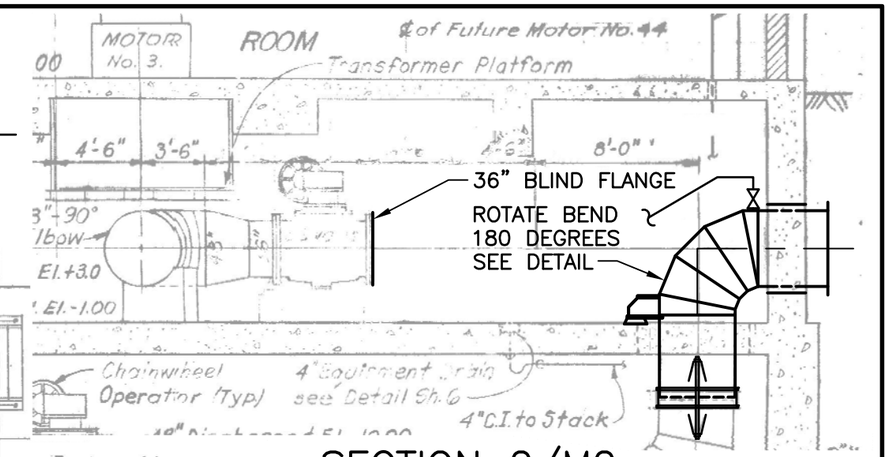

SECTION 2/M2

SCALE: 1/8" = 1'-0"

NOTES:

1. INSTALL NEW PUMPS WITH ASSOCIATED MOTOR AND ELECTRICAL EQUIPMENT.
2. FOR PUMPS NO. 1 AND NO. 3, ADJUST, CLEAN, PAINT AND REINSTALL PLATFORM, LADDER COVER PLATE AND RAILING AROUND NEW MOTORS. ADJUSTED MOTOR PLATFORM SHALL SUIT DIMENSIONS OF NEW MOTORS AND SHALL PROVIDE CLEAR ACCESS TO ELECTRICAL CONNECTIONS AND MOTOR LUBRICATION POINTS.
3. INSTALL NEW EXTENDED SHAFT MOTOR ON PUMP NO. 4. MODIFY FLOOR PLATE OVER PUMP NO. 4 TO ACCOMODATE EXTENDED SHAFT ARRANGEMENT.

M1, 6/20/2011 5:19:47 PM

GREELEY AND HANSEN
1715 N. WESTSHORE BLVD., STE. 464
TAMPA, FLORIDA 33607
CERTIFICATE OF AUTHORIZATION NO. 37

0 4 8 16
SCALE IN FEET

DESIGNED	FJB
DRAWN	JMW
CHECKED	DCH

NO.	DATE	APPD	REVISION

P.E. NAME: DAVID C. HAGAN P.E. NO. 39163
P.E. NAME:
DATE:

CITY OF TAMPA WASTEWATER DEPARTMENT
YBOR PUMPING STATION REHABILITATION

MECHANICAL

PIPING PLAN FL EL 12.00'

FILE: YBORM01
NO. M1
DATE JUNE 2011

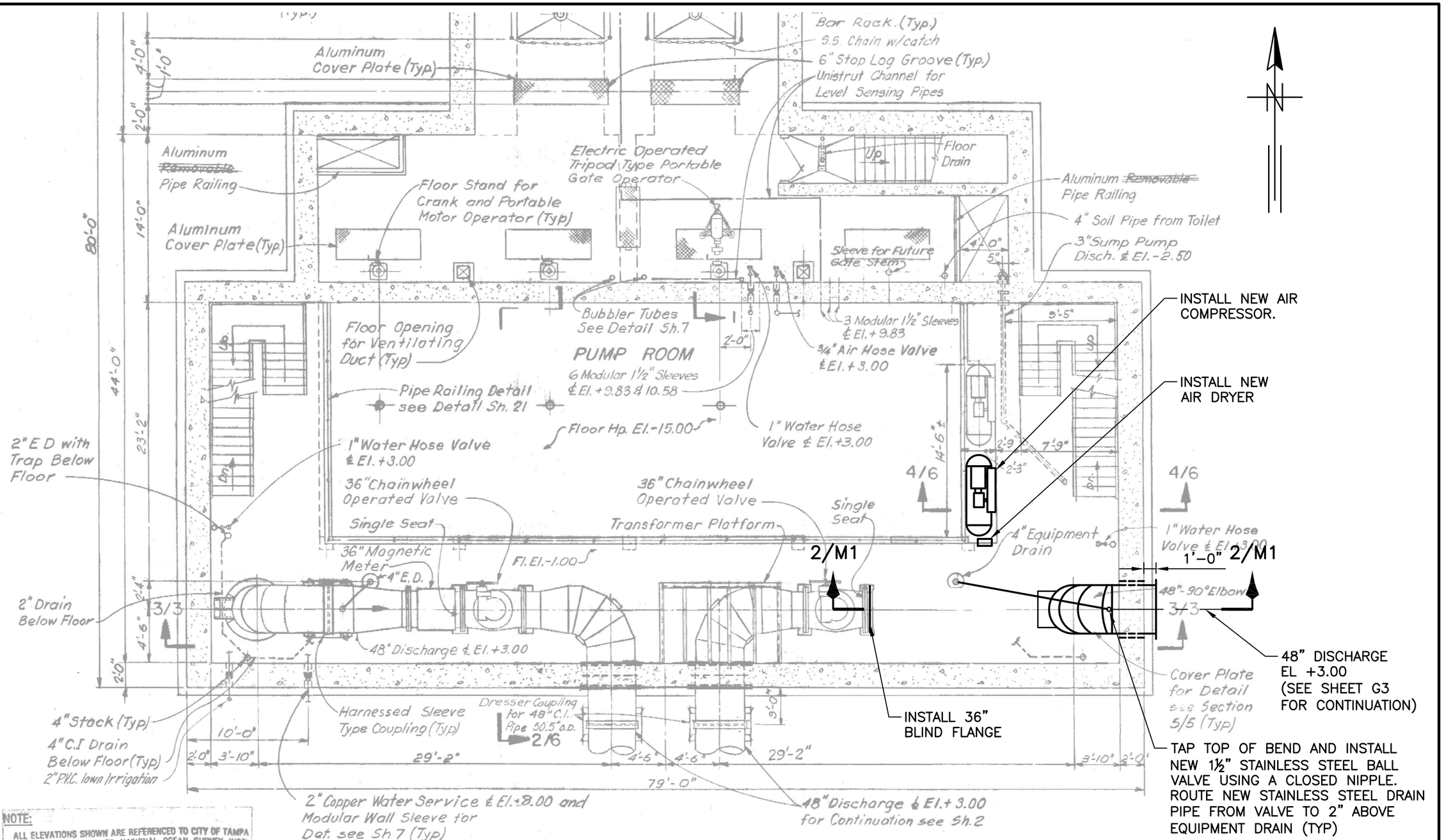

NOTE:
ALL ELEVATIONS SHOWN ARE REFERENCED TO CITY OF TAMPA DATUM. TO CONVERT TO NATIONAL OCEAN SURVEY (NOS) DATUM, SUBTRACT 0.15 FEET (0'-1 13/16").

PIPING SECTIONAL PLAN

SCALE: 1/8"=1'-0"

M2, 6/16/2011 2:10:18 PM

GREELEY AND HANSEN
1715 N. WESTSHORE BLVD., STE. 464
TAMPA, FLORIDA 33607
CERTIFICATE OF AUTHORIZATION NO. 37

0 4 8 16
SCALE IN FEET

DESIGNED	FJB
DRAWN	JMW
CHECKED	DCH

NO.	DATE	APPD	REVISION

P.E. NAME: DAVID C. HAGAN P.E. NO. 39163
P.E. NAME:
DATE:

CITY OF TAMPA WASTEWATER DEPARTMENT
YBOR PUMPING STATION REHABILITATION

MECHANICAL

PIPING PLAN – MEZANNINE

FILE: YBORM02

NO. M2

DATE JUNE 2011

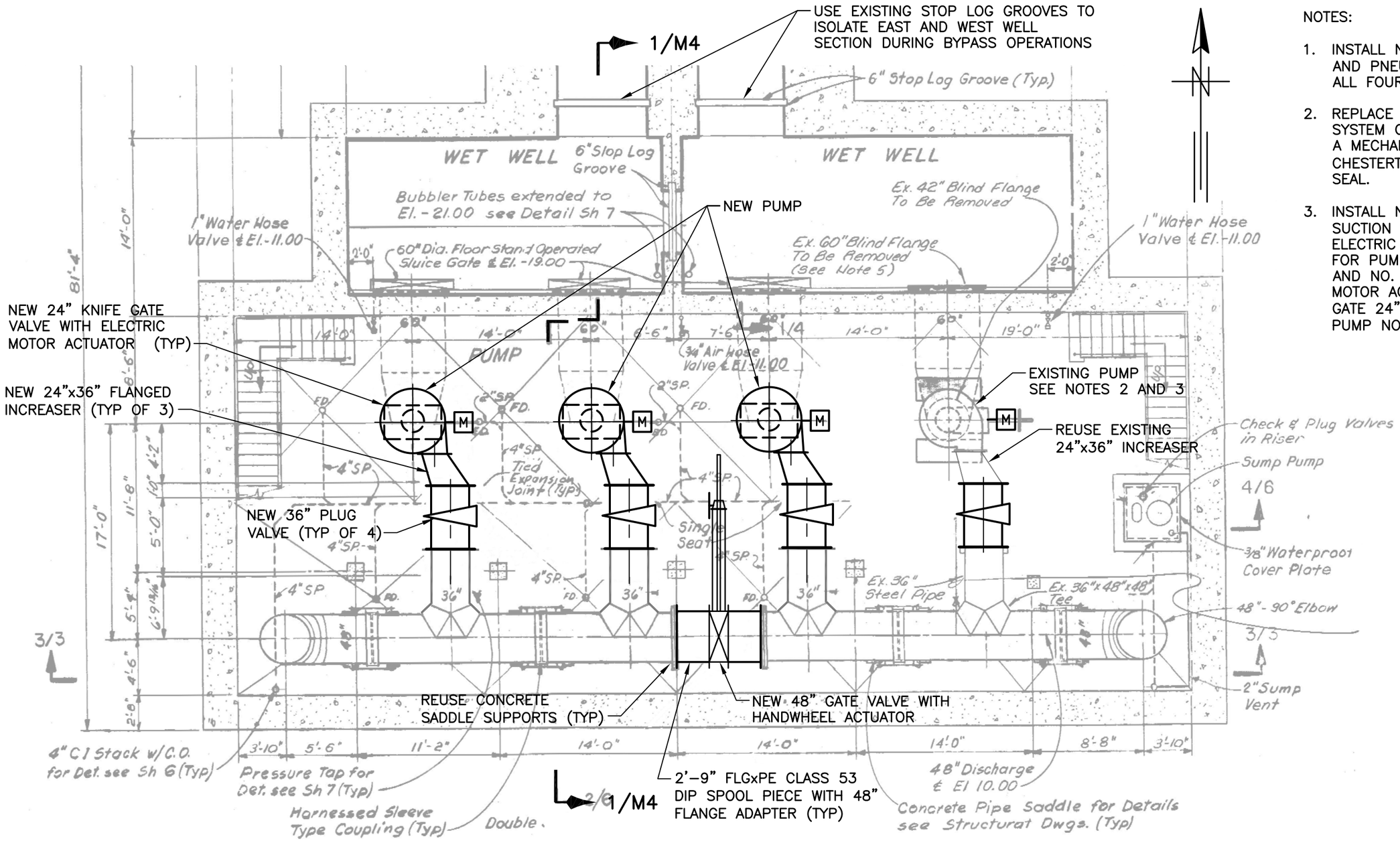

NOTES:

1. INSTALL NEW 36" PLUG VALVE AND PNEUMATIC ACTUATOR FOR ALL FOUR PUMPS.
2. REPLACE THE SEAL WATER SYSTEM OF PUMP NO. 4 WITH A MECHANICAL SEAL EQUAL TO CHESTERTON 442-50, 6¼" SEAL.
3. INSTALL NEW 24" KNIFE GATE SUCTION VALVES WITH ELECTRIC MOTOR ACTUATOR FOR PUMPS NO. 1, NO. 2 AND NO. 3. RETROFIT ELECTRIC MOTOR ACTUATOR FOR KNIFE GATE 24" SUCTION VALVE OF PUMP NO. 4.

PIPING PLAN EL -15.0

SCALE: 1/8"=1'-0"

M3, 6/16/2011 2:11:12 PM

GREELEY AND HANSEN
1715 N. WESTSHORE BLVD., STE. 464
TAMPA, FLORIDA 33607
CERTIFICATE OF AUTHORIZATION NO. 37

0 4 8 16
SCALE IN FEET

DESIGNED	FJB
DRAWN	JMW
CHECKED	DCH

NO.	DATE	APPD	REVISION

P.E. NAME: DAVID C. HAGAN P.E. NO. 39163
P.E. NAME:
DATE:

CITY OF TAMPA WASTEWATER DEPARTMENT
YBOR PUMPING STATION REHABILITATION

MECHANICAL

PIPING PLAN FL EL -15.00'

FILE: YBORM03

NO. M3

DATE JUNE 2011

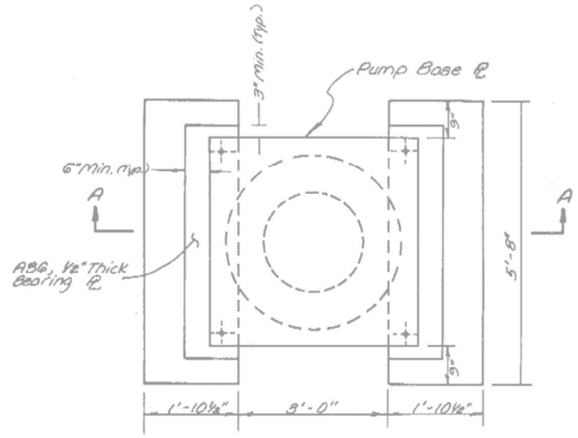

PLAN

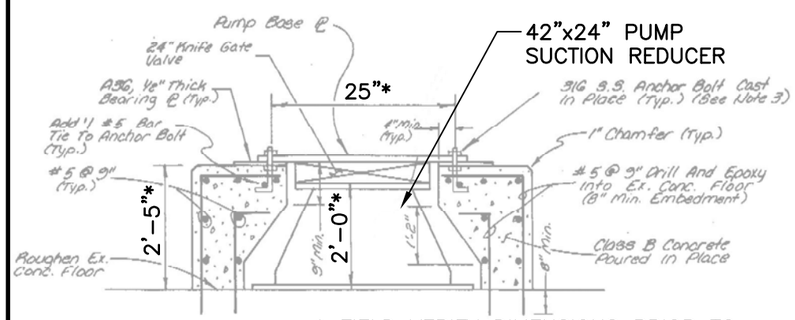

* FIELD VERIFY DIMENSIONS PRIOR TO FABRICATION. ADJUST DIMENSIONS IF NECESSARY TO ALIGN PUMP DISCHARGE.

SECTION A

PUMP PEDESTAL DETAIL

SCALE: 1/8" = 1'-0"

NOTES:

1. ABOVE DETAIL SHOWS EXISTING ARRANGEMENT FOR PUMP NO. 4. USE SAME DETAIL FOR NEW PUMP PEDESTALS FOR PUMPS NO. 1, 2, AND 3.
2. SIZE AND ALIGNMENT OF ANCHOR BOLTS SHALL BE AS RECOMMENDED BY PUMP MANUFACTURER.

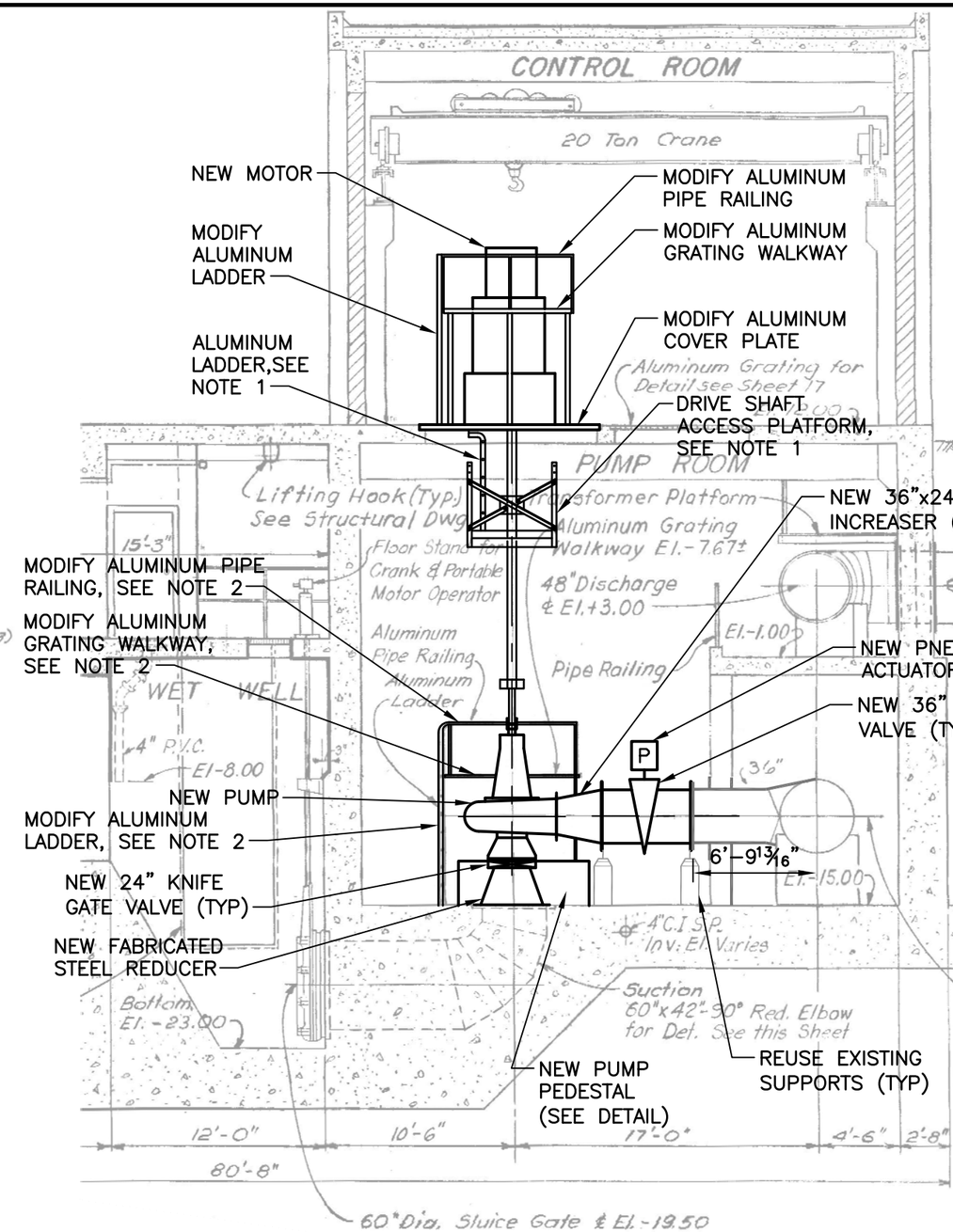

PIPING SECTION 1/M3

SCALE: 1/8" = 1'-0"

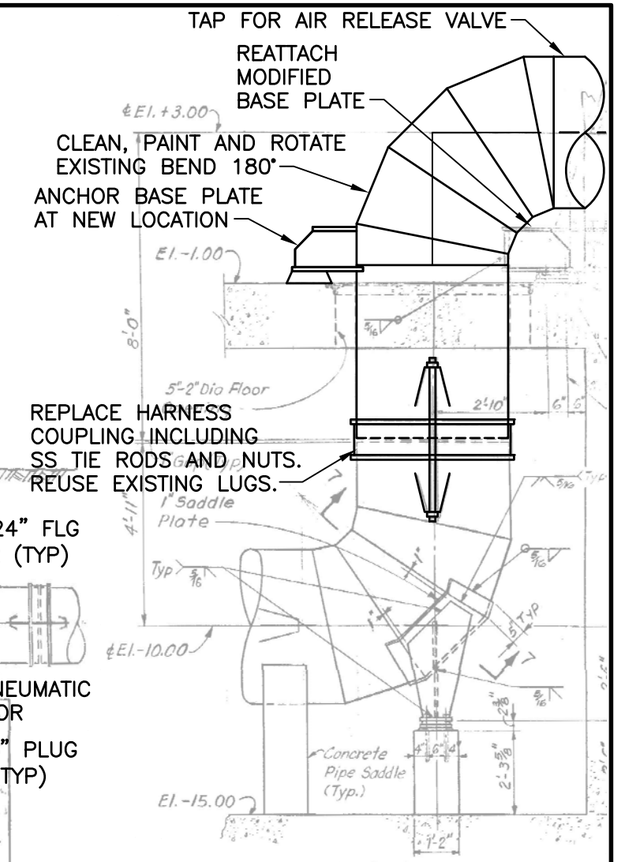

BEND ASSEMBLY DETAIL

SCALE: 1/4" = 1'-0"

NOTE:

1. DESIGN FABRICATE AND INSTALL DRIVE SHAFT ACCESS PLATFORM AND LADDER FOR PUMP NO. 4. SIMILAR TO EXISTING PLATFORMS FOR PUMPS NO. 1, NO. 2 AND NO. 3. SUBMIT SHOP DRAWING SIGNED AND SEALED BY PROFESSIONAL STRUCTURAL ENGINEER REGISTERED IN FLORIDA. DESIGN SHALL CONFORM TO ALL APLICABLE STANDARDS INCLUDING OSHA AND FLORIDA BUILDING CODE.
2. FOR PUMPS NO. 1, NO. 2 AND NO. 3, ADJUST, CLEAN, PAINT AND REINSTALL PUMP ACCESS PLATFORMS. ADJUSTED PUMP ACCESS PLATFORMS SHALL SUIT DIMENSIONS OF NEW PUMPS AND SHALL PROVIDE CLEAR ACCESS TO NEW SEALS AND DRIVE SHAFT CONNECTIONS.

M4, 6/20/2011 5:21:33 PM

GREELEY AND HANSEN
1715 N. WESTSHORE BLVD., STE. 464
TAMPA, FLORIDA 33607
CERTIFICATE OF AUTHORIZATION NO. 37

0 4 8 16
SCALE IN FEET

DESIGNED	FJB
DRAWN	JMW
CHECKED	DCH

NO.	DATE	APPD	REVISION

P.E. NAME: DAVID C. HAGAN P.E. NO. 39163
P.E. NAME: _____
DATE: _____

CITY OF TAMPA WASTEWATER DEPARTMENT
YBOR PUMPING STATION REHABILITATION

MECHANICAL

PIPING SECTIONS AND DETAILS

FILE: YBORM04

NO. M4

DATE JUNE 2011

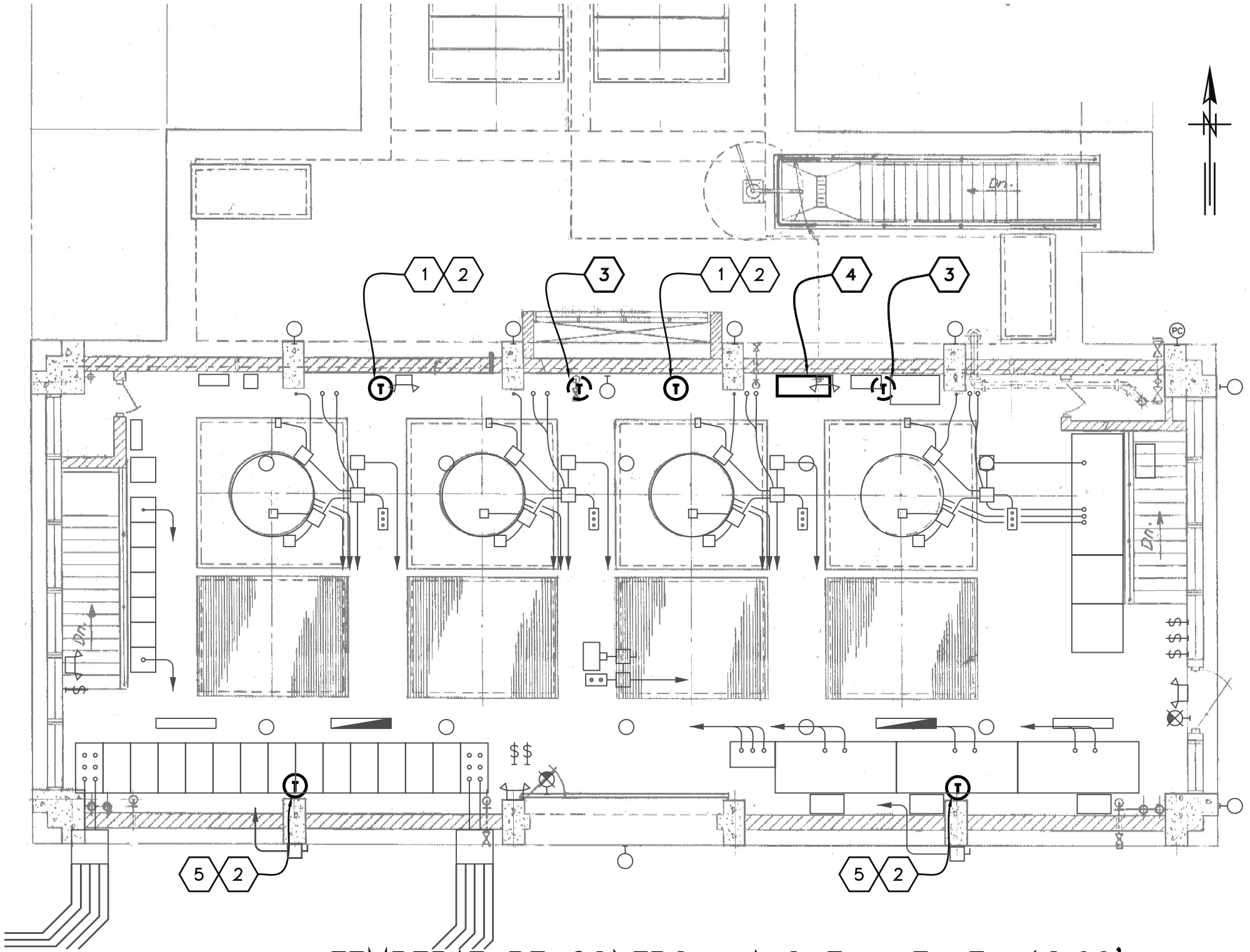

TEMPERATURE CONTROL LAYOUT – FL EL 12.00'

SCALE: 1/8" = 1'-0"

MECHANICAL NOTES:

1 – EXISTING THERMOSTAT TO BE REMOVED AND REPLACED WITH NEW.
2 – NEW THERMOSTAT EQUAL TO PECO MODEL TF115-001 AS DISTRIBUTED BY GRAINGER, ITEM NO. 4E636. NEMA 4X ENCLOSURE SUITABLE FOR LOCATIONS THAT ARE WET OR MILDLY CORROSIVE, WITH HIGH HUMIDITY OR AIRBORNE CONTAMINANTS.
3 – EXISTING THERMOSTAT TO BE REMOVED.
4 – NEW TEMPERATURE CONTROL PANEL.
5 – MOUNT THERMOSTAT ON WALL ABOVE EQUIPMENT. COORDINATE WITH ELECTRICAL INSTALLER FOR EXACT LOCATION.

YBOR PUMPING STATION

EXHAUST FANS SEQUENCE OF OPERATIONS

1. Each fan is to be provided with a Hand–Off–AUTO (HOA) selector switch installed in the motor control center.
2. In the Hand (H) position fan runs continuously.
3. In the Off (O) position fan is de–energized and off line
4. In the Auto (A) position fan operation is controlled as hereinafter indicated.
   - 4.1 Two (2) fans run contnuously to maintain Code required minimum exhaust air flow. refer to Table 1 for proposed run time sequence. Time for change over to adjustable (30 days/60 days or as desired).
   - 4.2 The other three (3) Stand By (SB) fans operate on/off on a signal from space thermostats. As space temperature rises above set point, fans are energized as required to maintain space temperature. Program initial set points for SB fans at 80°, 82°, and 84° respectively. Reverse sequence takes place in a drop in space temperature.
   - 4.3 All set points are adjustable and should automatically reset to default position upon restart after power failure.

TABLE 1

EF–1	EF–2	EF–3	EF–5	EF–6
RUN	RUN	SB	SB	SB
SB	RUN	RUN	SB	SB
SB	SB	RUN	RUN	SB
SB	SB	SB	RUN	RUN
RUN	SB	SB	SB	RUN

EXISTING SUPPLY FAN SEQUENCE OF OPERATIONS

1. Fan shall run continuously.
2. In a drop in space temperature, below minimum set point, the fan is de–energized.

A. J. SANCHEZ
CONSULTING ENGINEERS INC.
3825 Henderson Blvd. – Suite 103
Tampa, Florida 33629
TEL. (813) 281-0001 FAX. (813) 281 – 9041
EMAIL: AJSCE@TAMPABAY.RR.COM
WWW.AJSCE.COM
EB0005016

GREELEY AND HANSEN
1715 N. WESTSHORE BLVD., STE. 464
TAMPA, FLORIDA 33607
CERTIFICATE OF AUTHORIZATION NO. 37

0 4 8 16
SCALE IN FEET

DESIGNED AJS
DRAWN MH
CHECKED AJS

NO.	DATE	APPD	REVISION

P.E. NAME: ALBERTO J. SANCHEZ FL. P.E. NO. 21368
P.E. NAME:
DATE: 06–23–11

CITY OF TAMPA WASTEWATER DEPARTMENT
YBOR PUMPING STATION REHABILITATION

MECHANICAL

TEMPERATURE CONTROL LAYOUT – FL EL 12.00'

FILE: YBOREE10

NO. M5

DATE JUNE 2011

ONE LINE AND SCHEMATIC DIAGRAM SYMBOLS

SYMBOL	DESCRIPTION
	INCOMING FEEDER
	OUTGOING FEEDER
	CONDUCTORS CONNECTED
	GROUNDING CONNECTION
	LIGHTNING OR SURGE ARRESTOR
	RECTIFIER OR DIODE
	SURGE CAPACITOR
	POWER TRANSFORMER
CPT	CONTROL POWER TRANSFORMER
2 CT	CURRENT TRANSFORMER (NUMBER DENOTES QUANTITY REQUIRED)
CT	CURRENT TRANSFORMER 3 PHASE WINDOW TYPE
2 PT	POTENTIAL TRANSFORMER (NUMBER DENOTES QUANTITY REQUIRED)
52	MEDIUM VOLTAGE DRAWOUT TYPE CIRCUIT BREAKER
	DISCONNECTING OR DRAWOUT DEVICE
100A	LOW VOLTAGE AIR CIRCUIT BREAKER WITH 100A TRIP
225AF/125AT	LOW VOLTAGE AIR CIRCUIT BREAKER 225A FRAME AND 125A TRIP
225AF/150AT	LOW VOLTAGE AIR CIRCUIT BREAKER WITH COORDINATED CURRENT LIMITING FUSES – 225A FRAME AND 150A TRIP
	KEY INTERLOCK – DASHED LINE WITH ARROWS INDICATES MOVEMENT OF KEY DURING INTERLOCK PROCEDURE
M	FULL VOLTAGE MAGNETIC COMBINATION STARTER WITH MOTOR CIRCUIT PROTECTOR, CONTROL TRANSFORMER AND OVERLOAD RELAYS (M – OPERATING COIL)
F R	FULL VOLTAGE MAGNETIC COMBINATION REVERSING STARTER WITH MOTOR CIRCUIT PROTECTOR, CONTROL TRANSFORMER AND OVERLOAD RELAYS (F – FORWARD, R – REVERSE)
H L	FULL VOLTAGE MAGNETIC COMBINATION TWO SPEED STARTER WITH MOTOR CIRCUIT PROTECTOR, CONTROL TRANSFORMER AND OVERLOAD RELAYS (H – HIGH, L – LOW, F – FAST, S – SLOW)
R TR	REDUCED VOLTAGE MAGNETIC COMBINATION AUTOTRANSFORMER STARTER WITH MOTOR CIRCUIT PROTECTOR, CONTROL TRANSFORMER AND OVERLOAD RELAYS (R – RUN, TR – TIMER, 1S & 2S – TRANSITION)
	SOLID STATE REDUCED VOLTAGE COMBINATION STARTER WITH MOTOR CIRCUIT PROTECTOR AND CONTROL TRANSFORMER
5	MOTOR – THREE PHASE (NUMBER DENOTES HORSEPOWER)

SYMBOL	DESCRIPTION
M	OPERATING COIL (C–CONTACTOR, F–FAST, F–FORWARD, H–HIGH, L–LOW, M–MOTOR STARTER, R–REVERSE, S–SLOW)
AR XX	RELAY COIL (AR–AUXILIARY RELAY, CR–CONTROL RELAY, LOR–LOCKOUT RELAY, TR–TIME DELAY RELAY WHERE "XX" DENOTES RELAY FUNCTION OR NUMBER)
	NORMALLY OPEN CONTACT
	NORMALLY CLOSED CONTACT
OL	OVERLOAD RELAY CONTACT
X–X–O	NORMALLY OPEN (SHOWN) OR NORMALLY CLOSED RESET TIMER CONTACT (X–X–O – DENOTES TIMER SEQUENCE FOR RESET–TIMING–TIMED OUT PERIODS. X INDICATES CONTACT CLOSED)
TC	NORMALLY OPEN CONTACT WITH TIME DELAY CLOSING (ON DELAY)
TC	NORMALLY CLOSED CONTACT WITH TIME DELAY CLOSING (OFF DELAY)
TO	NORMALLY CLOSED CONTACT WITH TIME DELAY OPENING (ON DELAY)
TO	NORMALLY OPEN CONTACT WITH TIME DELAY OPENING (OFF DELAY)
LS	LIMIT SWITCH
F	FLOAT SWITCH
P OR V	PRESSURE OR VACUUM SWITCH
FL	FLOW SWITCH
T	TEMPERATURE SWITCH
TQ	TORQUE SWITCH
U L	LATCHING RELAY WITH CLEARING CONTACTS
	SELECTOR SWITCH
	NORMALLY OPEN PUSHBUTTON
	NORMALLY CLOSED PUSHBUTTON
	PUSHBUTTON STATION (ONE, TWO OR THREE UNIT)
R	INDICATING LIGHT (A–AMBER, B–BLUE, G–GREEN, R–RED, W–WHITE)
	THERMAL OVERLOAD ELEMENT (OL)
	ON–OFF SWITCH
R	RESISTOR
	FUSE
	BATTERY
	HEATING ELEMENT
PULL PUSH ON OFF	MAINTAINED CONTACT PUSHBUTTON WITH MUSHROOM HEAD OPERATOR
HAND OFF AUTO X OO	SELECTOR SWITCH X INDICATES CONTACT CLOSED IN CORRESPONDING SWITCH POSITION
CS	CURRENT SENSOR TRIP SWITCH

SYMBOL	DESCRIPTION
27	PROTECTIVE RELAYS: 25 – SYNCHRONIZING CHECK 27 – UNDERVOLTAGE 32 – REVERSE POWER 43 – SELECTOR SWITCH 47 – PHASE SEQUENCE 49 – THERMAL 50 – INSTANTANEOUS OVERCURRENT 51 – AC TIME OVERCURRENT 52 – AC CIRCUIT BREAKER 59 – OVERVOLTAGE 60 – VOLTAGE OR CURRENT BALANCE 62 – TIME DELAY 64 – GROUND 67 – DIRECTIONAL OVERCURRENT 86 – LOCKOUT 87 – DIFFERENTIAL CURRENT DBX – DEAD BUS AUXILIARY G – DEVICE IN GROUND CIRCUIT GSR – GROUND SENSING IR – INTERPOSING LOR – LOCKOUT N – DEVICE IN NEUTRAL CIRCUIT PSR – PHASE SENSING X – AUXILIARY
DPS	CONTROL DEVICES: DP – DIFFERENTIAL PRESSURE SWITCH F – FLOAT SWITCH FL – FLOW SWITCH LL – LEVEL SWITCH LS – LIMIT SWITCH P – PRESSURE SWITCH RDS – REVERSING DRUM SWITCH ST – SHUNT TRIP S – SOLENOID VALVE T – THERMOSTAT TQ – TORQUE SWITCH T – TEMPERATURE SWITCH VIB – VIBRATION SWITCH V – VACUUM SWITCH XS – TAMPER SWITCH
A	METER, INSTRUMENT OR INSTRUMENT SWITCHES: A – AMMETER AS – AMMETER SWITCH AT – CURRENT TRANSDUCER CS – BREAKER CONTROL SWITCH DT – DUTY TRANSFER SWITCH MMS – MICROPROCESSOR METERING SYSTEM MPR – MICROPROCESSOR PROTECTION RELAY MSH – MOTOR SPACE HEATER PF – POWER FACTOR METER POT – POTENTIOMETER SI – SPEED INDICATOR SS – SELECTOR SWITCH TM – ELAPSED TIME METER TMR – TIMER V – VOLTMETER VAR – VARMETER VART – VARS TRANSDUCER VS – VOLTMETER SWITCH VT – VOLTAGE TRANSDUCER W – WATTMETER WH – WATTHOUR METER WHD – WATTHOUR DEMAND METER WT – WATTS TRANSDUCER ZT – POSITION TRANSMITTER

ABBREVIATIONS

AFF – ABOVE FINISHED FLOOR
ATS – AUTOMATIC TRANSFER SWITCH
BKR – BREAKER
BOD – BOTTOM OF DUCT
CKT – CIRCUIT
DP – DISTRIBUTION PANELBOARD
DTC – DATA TERMINAL CABINET
GND – GROUND
GRS – GALVANIZED RIGID STEEL
HH – HAND HOLE
JB – JUNCTION BOX
LCP – LIGHTING CONTROL PANEL
LP – LIGHTING PANELBOARD
LT – LIGHTING TRANSFORMER
MCC – MOTOR CONTROL CENTER
MH – MAN HOLE
MH – MOUNTING HEIGHT
PB – PULL BOX
PLC – PROGRAMMABLE LOGIC CONTROLLER
PVC – POLYVINYL CHLORIDE
RTU – REMOTE TERMINAL UNIT
SP – SPACE
TB – TERMINAL BOX
TCP – TEMPERATURE CONTROL PANEL
TTC – TELEPHONE TERMINAL CABINET
WP – WEATHERPROOF
XP – EXPLOSION–PROOF
RBCP – REMOTE BREAKER CONTROL PANEL

POWER, LIGHTING AND MISCELLANEOUS PLAN SYMBOLS

SYMBOL	DESCRIPTION
	EXPOSED CONDUIT RUN
	CONCEALED CONDUIT RUN ABOVE CEILING OR IN WALLS
	CONCEALED CONDUIT RUN IN OR BELOW FLOOR SLAB
E	UNDERGROUND CONDUIT (CONCRETE ENCASED)
DB	UNDERGROUND CONDUIT (DIRECT BURIED)
C	UNDERGROUND CABLE (DIRECT BURIED)
	CONDUIT CAPPED
	CONDUIT UP
	CONDUIT DOWN
	CONDUIT WITH HOT, NEUTRAL AND GROUND WIRES (LONG LINE DENOTES NEUTRAL; LONG LINE WITH DOT DENOTES GROUND)
LP6 1,3,5	HOME RUN TO LIGHTING PANELBOARD (LP6 INDICATES PANELBOARD AND 1,3,5 INDICATES CIRCUITS 1, 3 AND 5)
	FLEXIBLE CONDUIT OR CABLE
	GROUNDING CONDUCTOR
	NEUTRAL CONDUCTOR
	EQUIPMENT ENCLOSURE AS INDICATED ON PLAN
	LIGHTING PANELBOARD 208Y/120V OR 120/240V
	LIGHTING PANELBOARD 480Y/277V
T	DRY TYPE TRANSFORMER
	JUNCTION BOX, PULL BOX OR TERMINAL BOX
	MANUALLY OPERATED DISCONNECTING CIRCUIT BREAKER OR SWITCH (SEE SPECIFICATIONS)
RS	MANUAL REVERSING DRUM SWITCH, FORWARD–OFF–REVERSE, MAINTAINED CONTACTS
	FULL VOLTAGE MAGNETIC STARTER OR CONTACTOR
	COMBINATION CIRCUIT BREAKER STARTER
	MOTOR – THREE PHASE
	MOTOR – SINGLE PHASE
M	MOTOR OPERATED VALVE OR SLUICE GATE WITH INTEGRAL CONTROLLER AND CONTROL STATION
	CONTROL STATION (SEE SCHEMATIC DIAGRAMS FOR ASSOCIATED DEVICES)
X	CONTROL STATION AND FIELD CONTROL DEVICES (SEE ONE LINE DIAGRAMS AND SCHEMATICS FOR DETAILS)
	GROUND ROD
	GROUND ROD WITH ACCESS BOX
	LIGHTNING ROD
M	METER SOCKET
WH	WATER HEATER
	UNIT HEATER
	LIGHT LINE DENOTES EXISTING WORK
	HEAVY LINE DENOTES NEW WORK
	WORK TO BE DEMOLISHED

SYMBOL	DESCRIPTION
1A	WALL OR CEILING MOUNTED INCANDESCENT OR HID LIGHTING FIXTURE UPPER LETTER DENOTES FIXTURE TYPE NUMBER DENOTES CIRCUIT NUMBER AND LETTER DENOTES SWITCH CONTROLLING FIXTURE
	EMERGENCY LIGHTING FIXTURE
	WALL OR CEILING MOUNTED EXIT OR DIRECTIONAL SIGN (SHADED SIDE DENOTES ILLUMINATED FACE ARROW INDICATES DIRECTION)
	POLE MOUNTED LIGHTING FIXTURE
	FLOODLIGHT
	FLUORESCENT STRIP LIGHTING FIXTURE
	FLUORESCENT LIGHTING FIXTURE
	EMERGENCY FLUORESCENT LIGHTING FIXTURE
T	REMOTE TEST PUSHBUTTON AND "ON" INDICATING LIGHT FOR BATTERY EQUIPPED LIGHTING FIXTURES
	EMERGENCY BATTERY PACK WITH TWO LIGHTING HEADS
	EMERGENCY BATTERY PACK – REMOTE HEAD
PC	PHOTOELECTRIC CELL
	SINGLE RECEPTACLE 2 POLE, 3 WIRE, 120 VOLT, 20A, OR AS NOTED
	DUPLEX RECEPTACLE 2 POLE, 3 WIRE, 120 VOLT, 20A, OR AS NOTED
	DUPLEX RECEPTACLE 2 POLE, 3 WIRE, 208 VOLT, 20A, OR AS NOTED
	FLOOR OUTLET BOX WITH DUPLEX RECEPTACLE 2 POLE, 3 WIRE, 120 VOLT, 20A, OR AS NOTED
	SINGLE RECEPTACLE – SINGLE PHASE (RATING AS NOTED)
	SINGLE RECEPTACLE – THREE PHASE (RATING AS NOTED)
C	CLOCK WITH RECEPTACLE
TYPE	SINGLE POLE SWITCH UNLESS NOTED OTHERWISE 2P – TWO POLE 3 – THREE WAY 4 – FOUR WAY D – DOOR SWITCH M – MOMENTARY CONTACT MS – MOTOR STARTING PL – WITH PILOT LIGHT T – THERMAL OVERLOAD TS – TIME SWITCH
	INTERCOM TELEPHONE OUTLET
	INTERCOM TELEPHONE FLOOR OUTLET
	PUBLIC TELEPHONE OUTLET
	PUBLIC TELEPHONE FLOOR OUTLET
S	SPEAKER
S	BI–DIRECTIONAL SPEAKER
S	INTERCOMMUNICATION SPEAKER
V	INTERCOMMUNICATION SPEAKER VOLUME CONTROL
TV	CLOSED CIRCUIT TELEVISION CAMERA
	ALARM HORN
	ALARM BELL
FACP	FIRE ALARM CONTROL PANEL
FAAP	FIRE ALARM ANNUNCIATOR PANEL
F	MANUAL PULL STATION
S	SMOKE DETECTOR
H	HEAT DETECTOR
	PHOTOELECTRIC BEAM SMOKE DETECTOR TRANSMITTER
	PHOTOELECTRIC BEAM SMOKE DETECTOR RECEIVER
A	AUDIBLE/VISUAL INDICATING DEVICE WITH HORN
A	AUDIBLE/VISUAL INDICATING DEVICE WITH BELL
A	VISUAL INDICATING DEVICE
FS	SPRINKLER SYSTEM FLOW SWITCH
TS	SPRINKLER SYSTEM TAMPER SWITCH
M	MAGNETIC DOOR SWITCH
PI	PASSIVE INFRARED MOTION DETECTOR
	INFRARED BEAM MOTION DETECTION TRANSMITTER
	INFRARED BEAM MOTION DETECTION RECEIVER

NOTE:
THIS IS A GENERAL LEGEND PROVIDED TO FACILITATE USE OF THE ELECTRICAL DRAWINGS. ALL SYMBOLS MAY NOT BE USED IN THIS SET OF ELECTRICAL DRAWINGS. REFER TO THE DRAWINGS AND SPECIFICATIONS FOR ITEMS REQUIRED.

GREELEY AND HANSEN
1715 N. WESTSHORE BLVD., STE. 464
TAMPA, FLORIDA 33607
CERTIFICATE OF AUTHORIZATION NO. 37

NO SCALE

DESIGNED RZ
DRAWN TT
CHECKED DD

NO.	DATE	APPD	REVISION

P.E. NAME: NORBERT VIRANYI P.E. NO. 72587
P.E. NAME:
DATE:

CITY OF TAMPA WASTEWATER DEPARTMENT
YBOR PUMPING STATION REHABILITATION

ELECTRICAL

LEGEND AND SYMBOLS

FILE: YBOREE01
NO. E1
DATE JUNE 2011

FILE: YBOREE01 1:1 06/20/11 16:21 GH–A

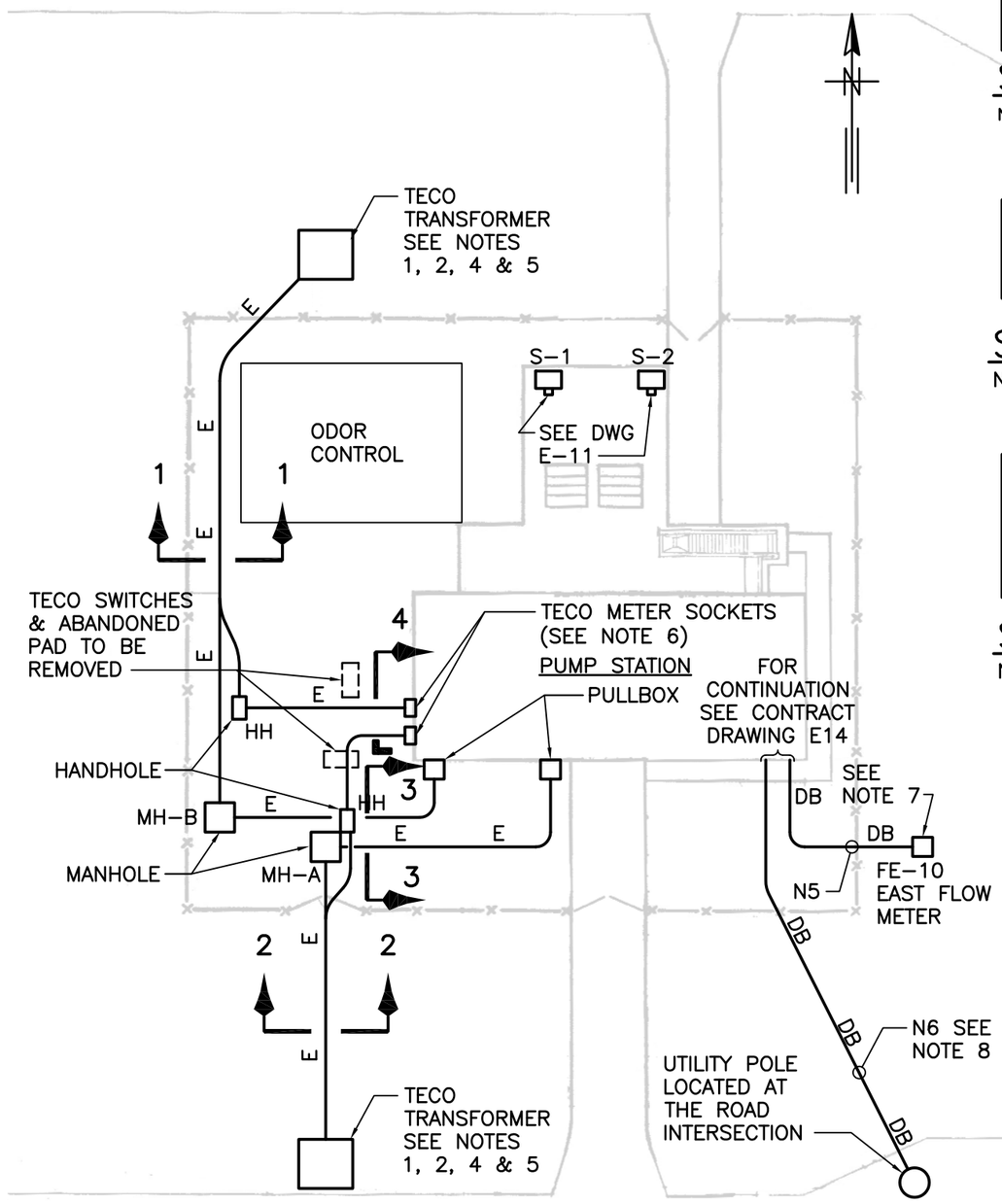

SITE PLAN

SCALE: 1" = 30'

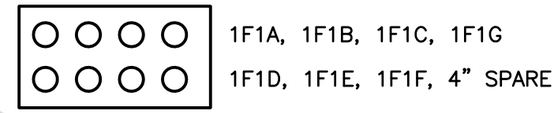

SECTION 1/E2

NOT TO SCALE

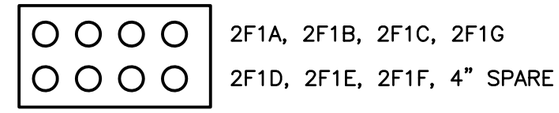

SECTION 2/E2

NOT TO SCALE

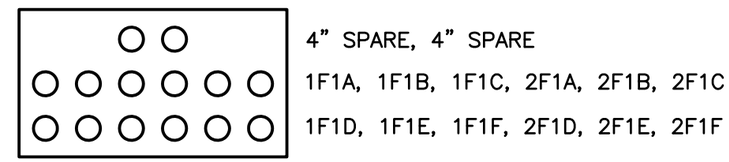

SECTION 3/E2

NOT TO SCALE

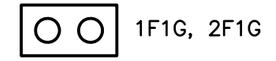

SECTION 4/E2

NOT TO SCALE

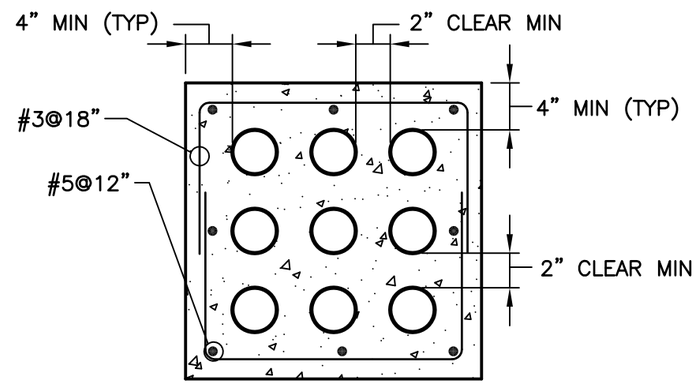

TYPICAL REINFORCING FOR CONCRETE ENCASTED ELECTRICAL CONDUITS

NOT TO SCALE

NOTES:

1. A NEW CONCRETE PAD LOCATED IN CLOSE PROXIMITY TO THE EXISTING TECO TRANSFORMER PAD WILL BE PROVIDED BY TECO.
2. A GROUND GRID FOR GROUNDING THE TRANSFORMER WILL BE PROVIDED BY TECO.
3. ALL CONDUITS SHOWN IN THE UNDERGROUND DUCT BANKS ARE A MINIMUM OF 4" ID UNLESS OTHERWISE NOTED.
4. EXISTING UNDERGROUND SERVICE CONDUITS DETERMINED TO BE IN CONFLICT WITH NEW WORK ARE TO BE DEMOLISHED AND REMOVED. THOSE NOT IN CONFLICT ARE TO BE ABANDONED IN PLACE.
5. EXISTING TECO TRANSFORMER PADS ARE TO BE DEMOLISHED.
6. COORDINATE THE MAXIMUM ALLOWABLE DISTANCE BETWEEN INSTRUMENT TRANSFORMERS AND THE METERS WITH TAMPA ELECTRIC COMPANY (TECO). IF THE LOCATION SHOWN EXCEEDS THE ALLOWABLE DISTANCE RELOCATE THE METERS PER TECO DIRECTION. PROVIDE CONCRETE PADS, ENCLOSURES, AND THE REQUIRED SUPPORTS AS DIRECTED BY TECO AND AS REQUIRED BY TECO INSTALLATION BULLETIN.
7. SEE SPECIFICATION 13420 FOR FLOW METER INSTALLATION REQUIREMENTS.
8. COORDINATE ALL WORK WITH LOCAL CABLE COMPANY. DISCONNECT AND REMOVE EXISTING OVERHEAD CABLE AND REPLACE WITH UNDERGROUND CONDUIT AND CABLE AS SHOWN.

GREELEY AND HANSEN
1715 N. WESTSHORE BLVD., STE. 464
TAMPA, FLORIDA 33607
CERTIFICATE OF AUTHORIZATION NO. 37

0 15 30 60
SCALE IN FEET

DESIGNED	RZ
DRAWN	TT
CHECKED	DD

NO.	DATE	APPD	REVISION

P.E. NAME: NORBERT VIRANYI P.E. NO. 72587
P.E. NAME:
DATE:

CITY OF TAMPA WASTEWATER DEPARTMENT
YBOR PUMPING STATION REHABILITATION

ELECTRICAL

SITE PLAN

FILE: YBOREE02

NO. E2

DATE JUNE 2011

FILE: YBOREE02 1:1 06/21/11 07:18 GH-A

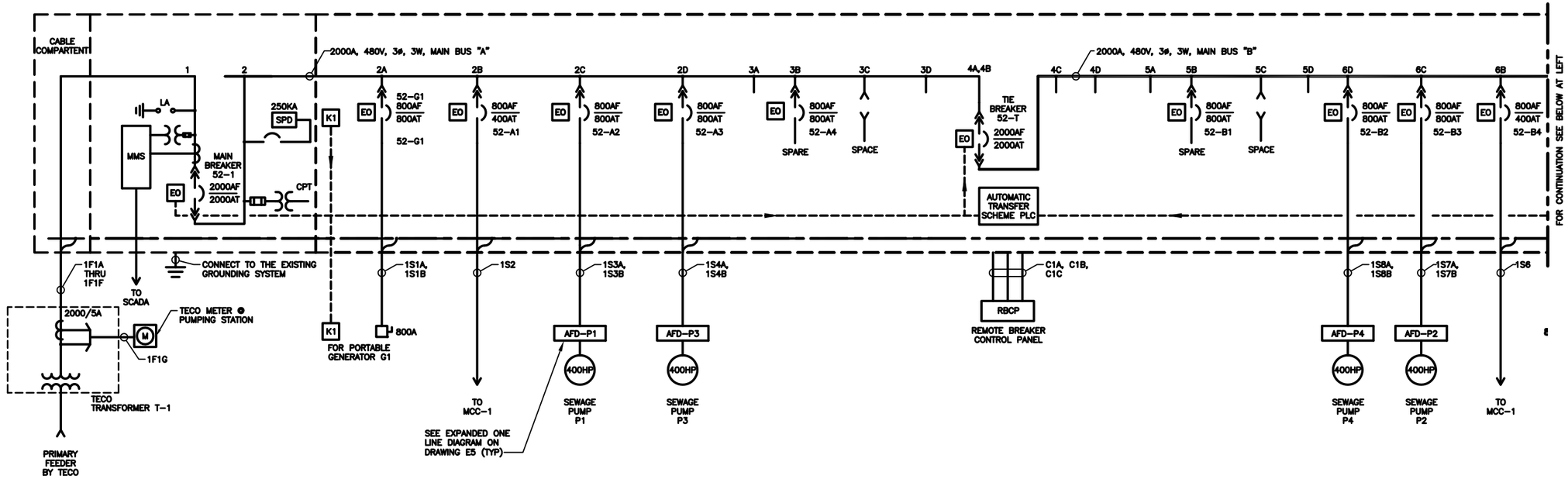

480V MAIN SERVICE SWITCHGEAR SES-1

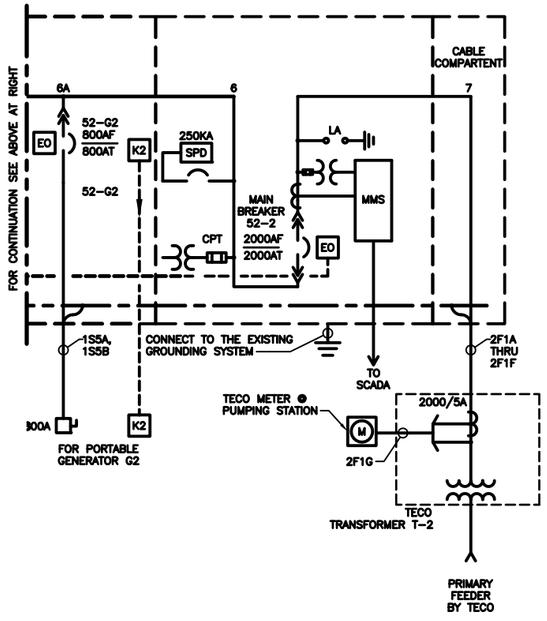

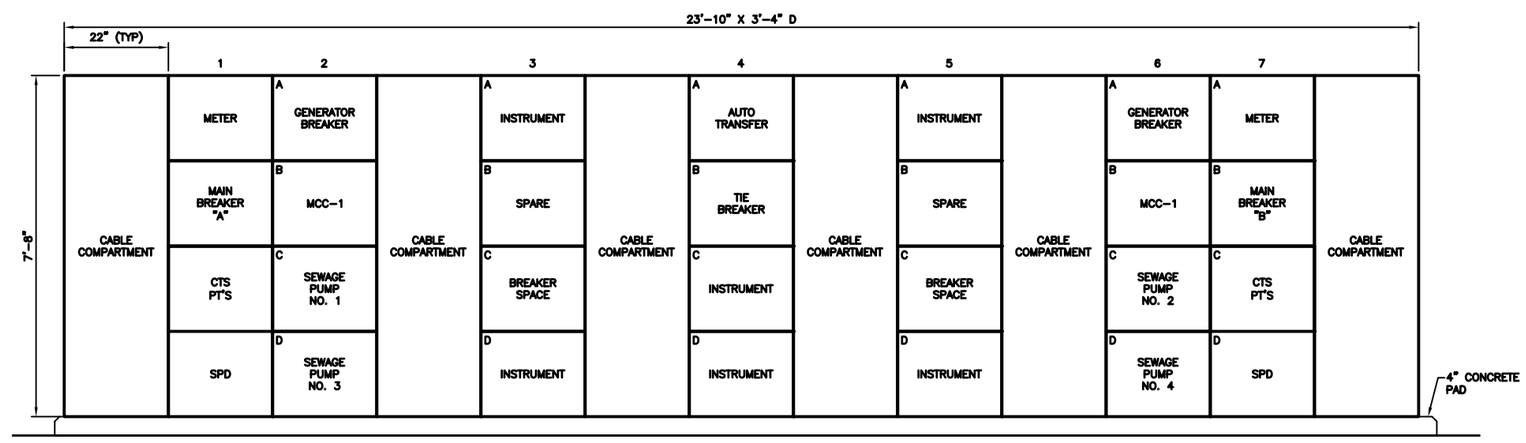

MAIN SERVICE SWITCHGEAR SES-1 FRONT ELEVATION

NOT TO SCALE

FILE: YBOREE03 1:1 06/20/11 08:23 GH-A

GREELEY AND HANSEN
1715 N. WESTSHORE BLVD., STE. 464
TAMPA, FLORIDA 33607
CERTIFICATE OF AUTHORIZATION NO. 37

0 1 2 3 5
SCALE IN FEET

DESIGNED RZ
DRAWN TT
CHECKED DD

NO.	DATE	APPD	REVISION

P.E. NAME: NORBERT VIRANYI P.E. NO. 72587
P.E. NAME:
DATE:

CITY OF TAMPA WASTEWATER DEPARTMENT
YBOR PUMPING STATION REHABILITATION

ELECTRICAL

MAIN SERVICE SWITCHGEAR SES-1
ONE LINE DIAGRAM

FILE: YBOREE03

NO. E3

DATE JUNE 2011

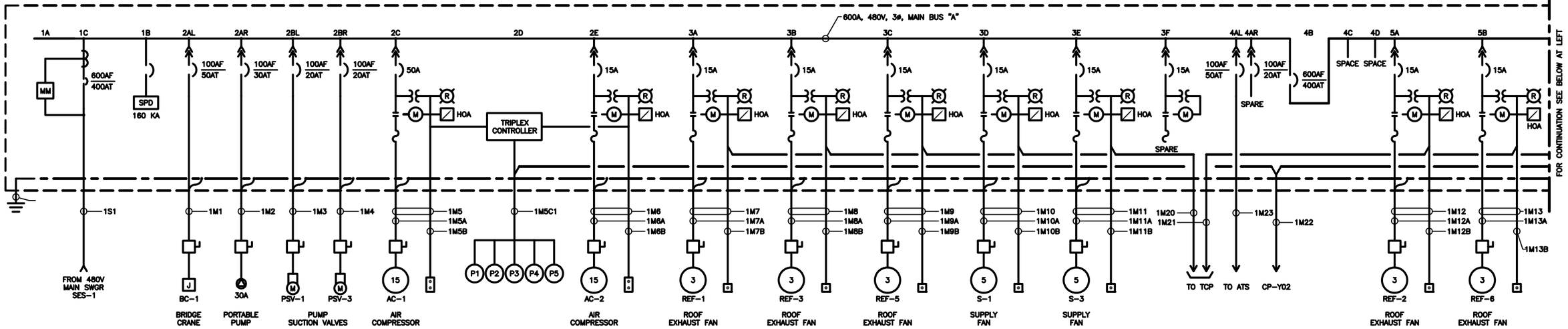

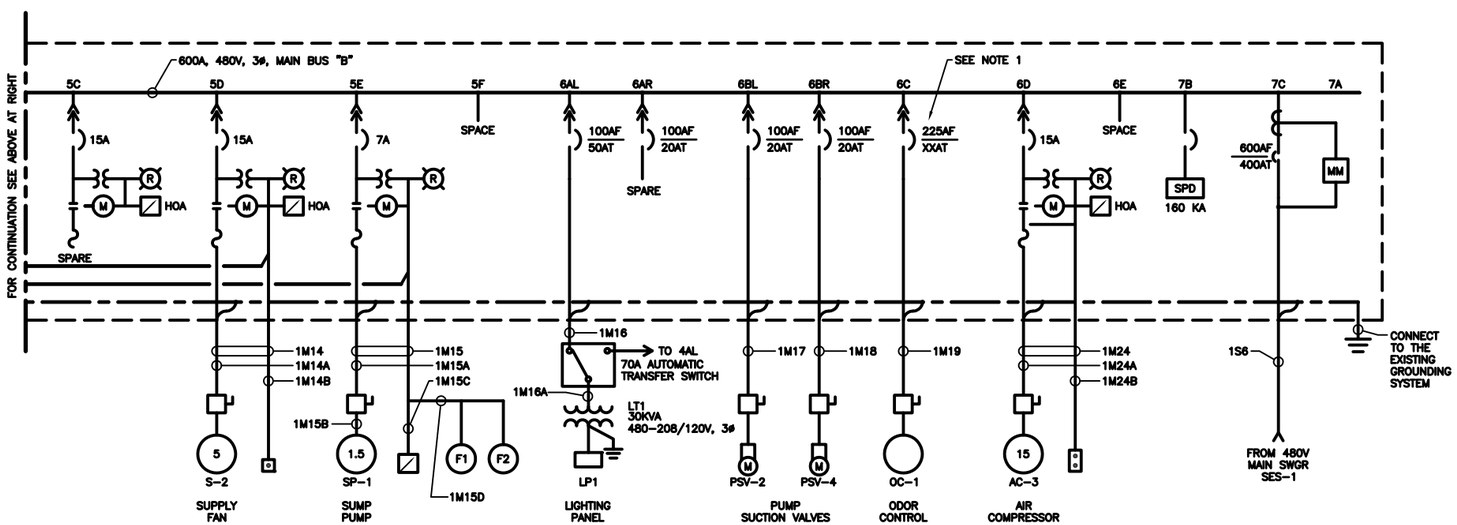

MOTOR CONTROL CENTER MCC-1
ONE LINE DIAGRAM

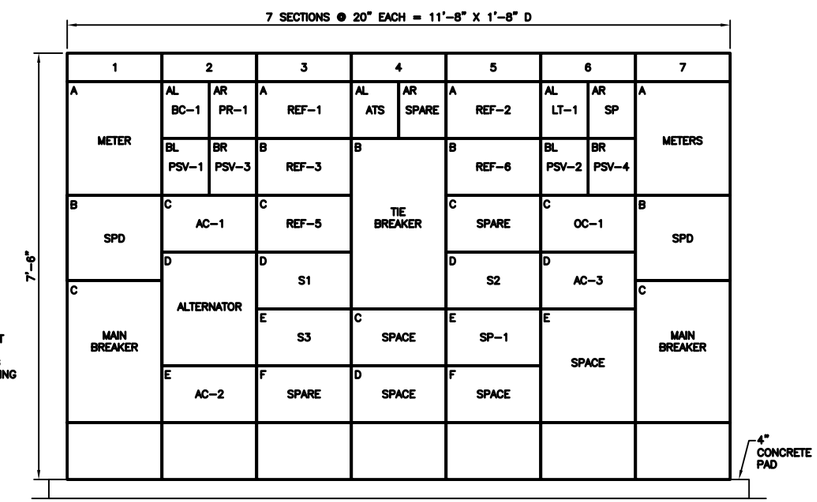

MCC-1 FRONT ELEVATION

NOT TO SCALE

NOTE:

1. ODOR CONTROL FEEDER CIRCUIT BREAKER AND DISCONNECT SWITCH TO MATCH EXISTING ODOR CONTROL POWER REQUIREMENTS.
2. ALL SPACES TO BE SUITABLE FOR FUTURE UPGRADES WITH NEW STARTERS OR CIRCUIT BREAKERS.

FILE: YBOREE04 1:1 06/20/11 14:49 GH-A

GREELEY AND HANSEN
1715 N. WESTSHORE BLVD., STE. 464
TAMPA, FLORIDA 33607
CERTIFICATE OF AUTHORIZATION NO. 37

0 1 2 3 5
SCALE IN FEET

DESIGNED RZ
DRAWN OC
CHECKED DD

NO.	DATE	APPD	REVISION

P.E. NAME: NORBERT VIRANYI P.E. NO. 72587
P.E. NAME:
DATE:

CITY OF TAMPA WASTEWATER DEPARTMENT
YBOR PUMPING STATION REHABILITATION

ELECTRICAL

MOTOR CONTROL CENTER
ONE LINE DIAGRAM

FILE: YBOREE04

NO. E4

DATE JUNE 2011

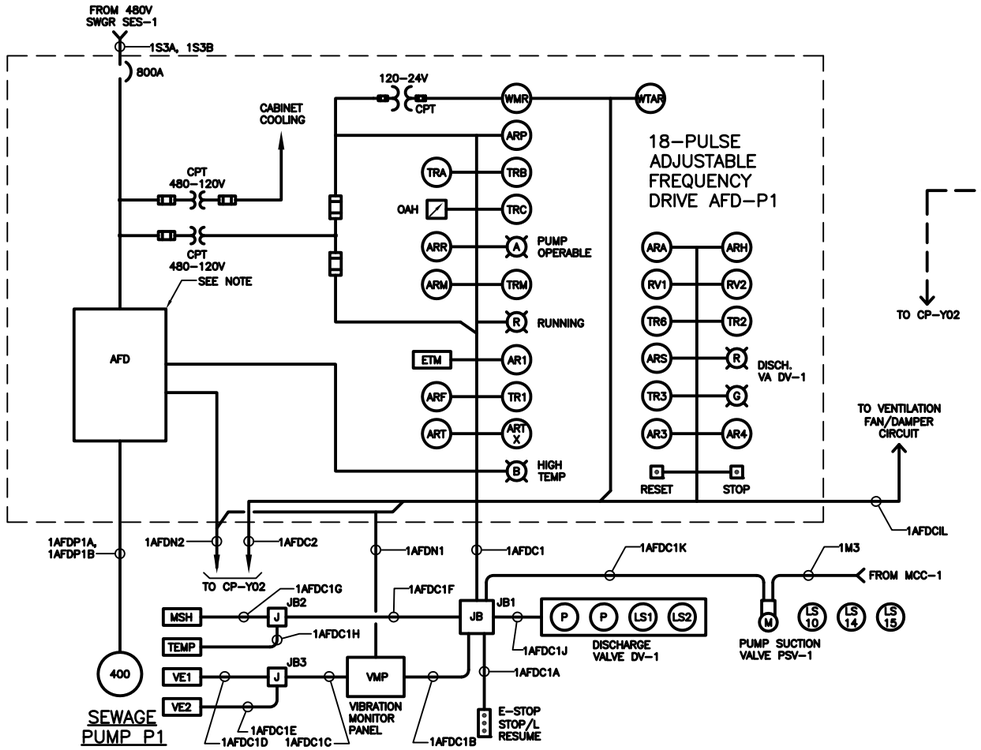

AFD-P1 ONE LINE DIAGRAM

SIMILAR FOR AFD-P2, P3 AND P4
NOTE: PROVIDE STANDARD INPUT FRONT END DEVICES PER THE SPECIFIED MANUFACTURER

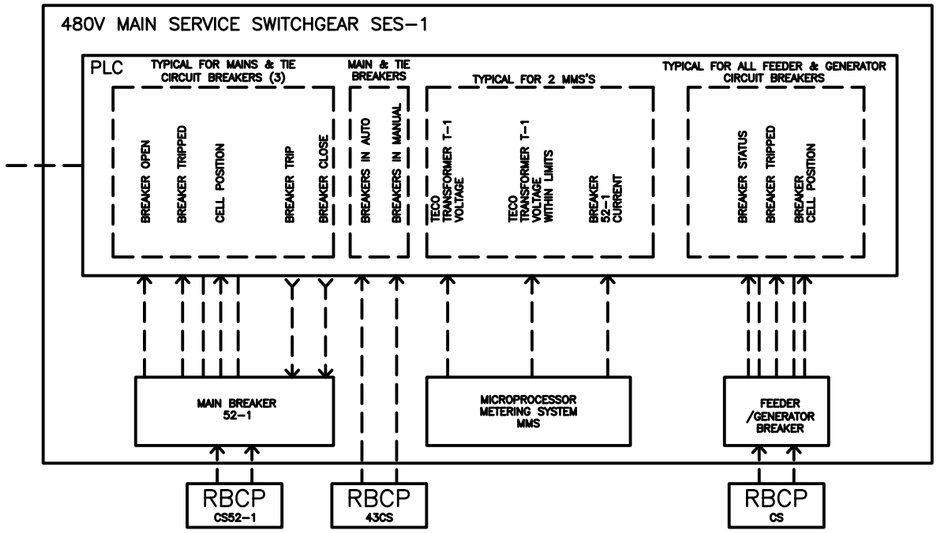

ELECTRICAL SWITCHGEAR CONTROL AND MONITORING P&ID DIAGRAM

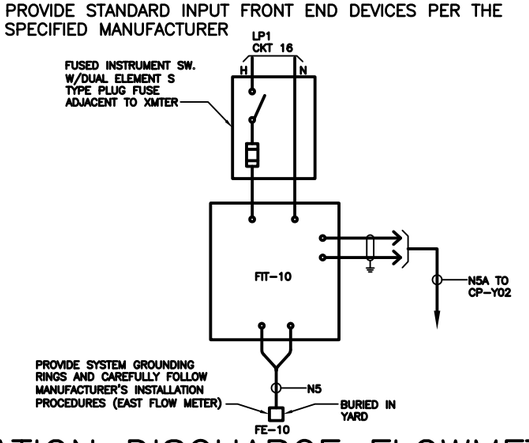

STATION DISCHARGE FLOWMETER BLOCK WIRING DIAGRAM

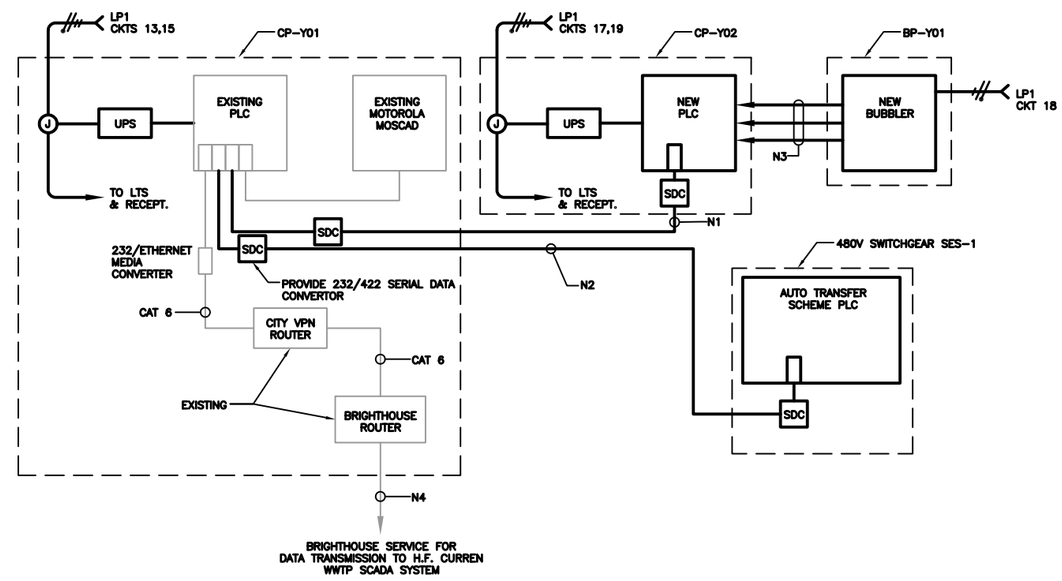

PUMP STATION SCADA COMMUNICATIONS BLOCK WIRING DIAGRAM

FILE: YBOREE05 1:1 06/21/11 07:29 GH-A

GREELEY AND HANSEN
1715 N. WESTSHORE BLVD., STE. 464
TAMPA, FLORIDA 33607
CERTIFICATE OF AUTHORIZATION NO. 37

NO SCALE

DESIGNED	RZ
DRAWN	OC
CHECKED	DD

NO.	DATE	APPD	REVISION

P.E. NAME: NORBERT VIRANYI P.E. NO. 72587
P.E. NAME:
DATE:

CITY OF TAMPA WASTEWATER DEPARTMENT
YBOR PUMPING STATION REHABILITATION

ELECTRICAL

MISCELLANEOUS DIAGRAMS

FILE: YBOREE05

NO. E5

DATE JUNE 2011

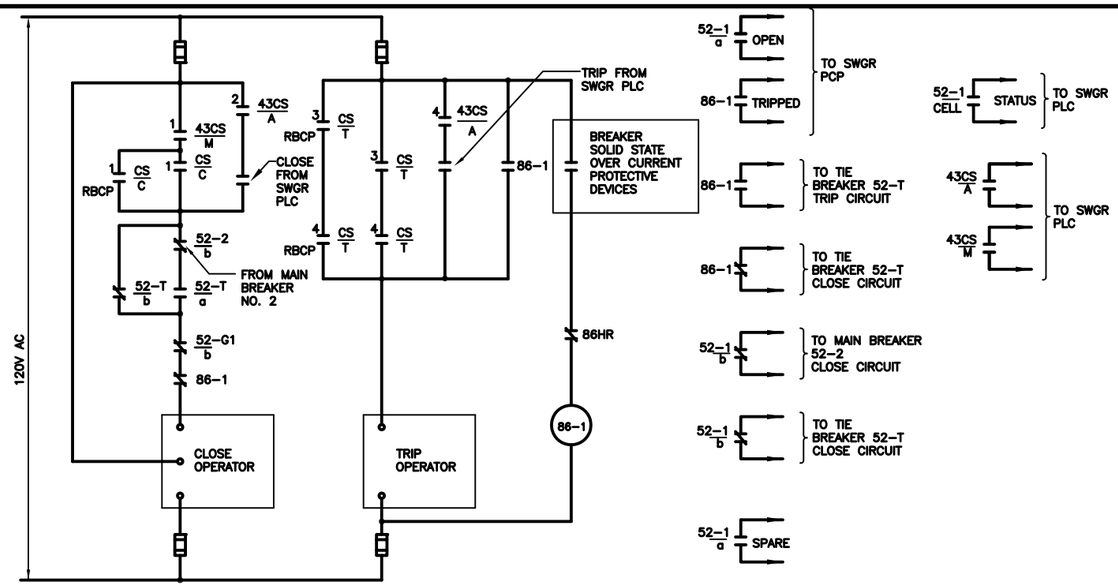

MAIN BREAKER 52-1 CONTROL CIRCUIT

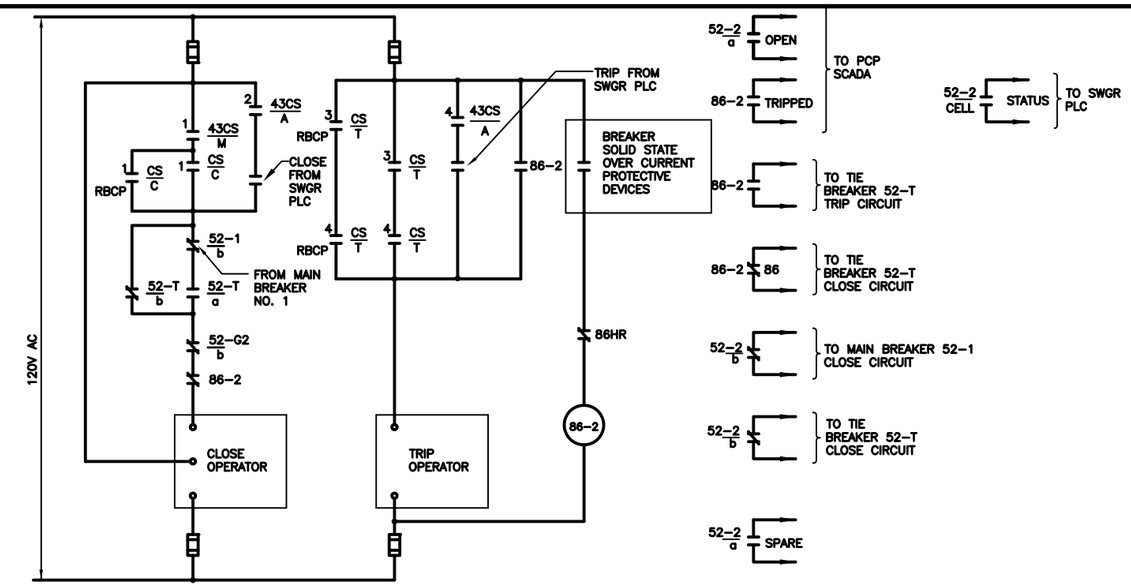

MAIN BREAKER 52-2 CONTROL CIRCUIT

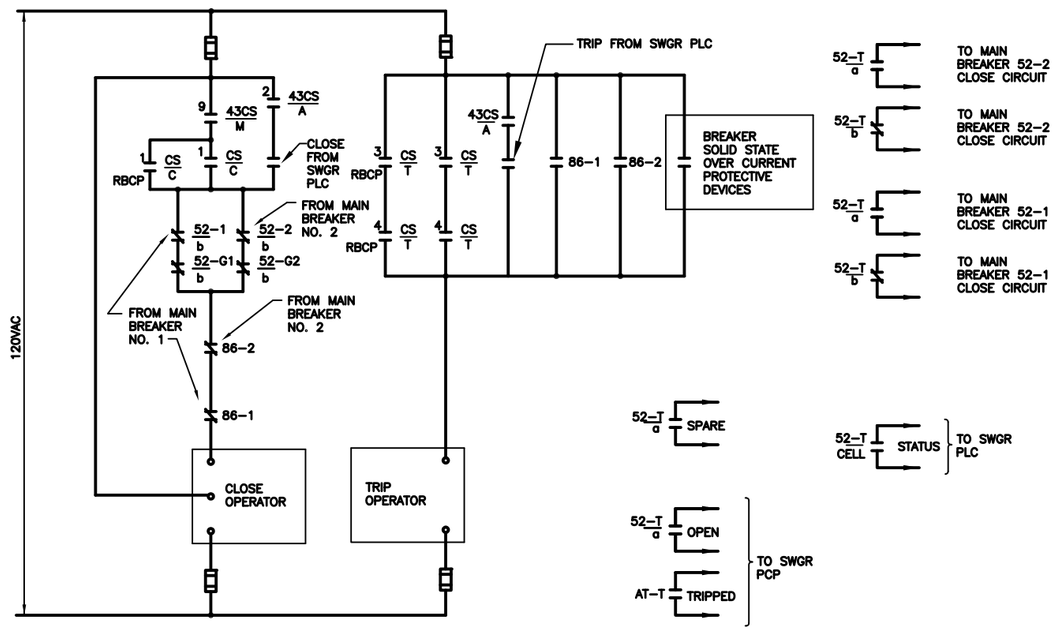

TIE BREAKER 52-T CONTROL CIRCUIT

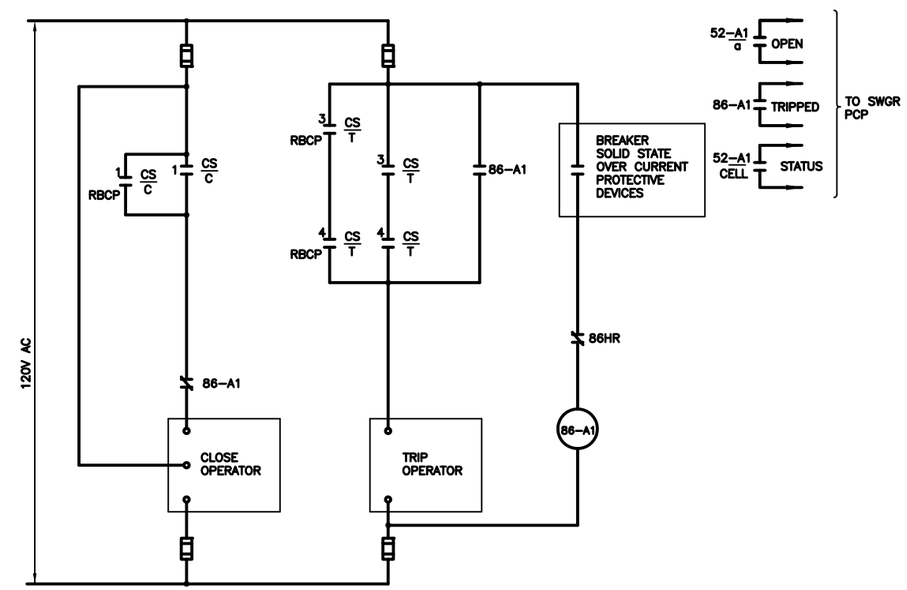

FEEDER BREAKER 52-A1 CONTROL CIRCUIT

SIMILAR FOR 52-A2, 3, 4, 52-B1, 2, 3 & 4

FILE: YBOREE06 1:1 06/10/11 08:00 GH-A

GREELEY AND HANSEN
1715 N. WESTSHORE BLVD., STE. 464
TAMPA, FLORIDA 33607
CERTIFICATE OF AUTHORIZATION NO. 37

0 1 2 3 5
SCALE IN FEET

DESIGNED	RZ
DRAWN	OC
CHECKED	DD

NO.	DATE	APPD	REVISION

P.E. NAME: NORBERT VIRANYI P.E. NO. 72587

P.E. NAME:
DATE:

CITY OF TAMPA WASTEWATER DEPARTMENT
YBOR PUMPING STATION REHABILITATION

ELECTRICAL

CONTROL DIAGRAMS

FILE: YBOREE06

NO. E6

DATE JUNE 2011

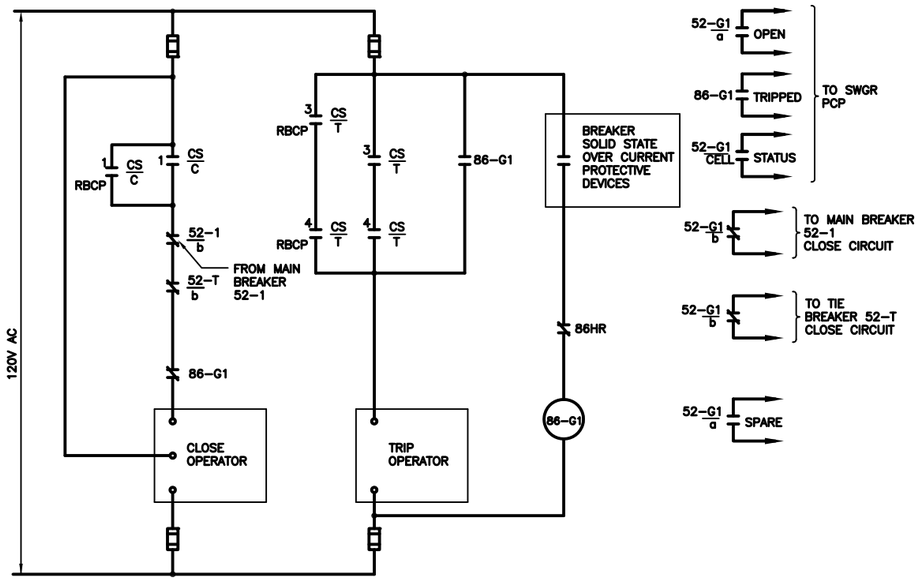

GENERATOR BREAKER 52-G1 CONTROL CIRCUIT

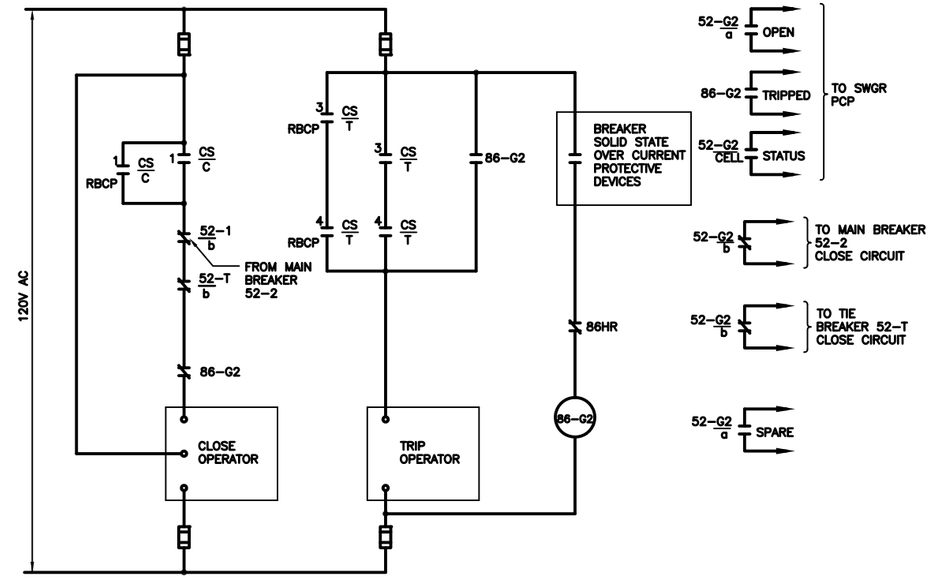

GENERATOR BREAKER 52-G2 CONTROL CIRCUIT

MAIN-TIE-MAIN BREAKERS MANUAL/AUTO TRANSFER SELECTOR SWITCH 43CS

CONTACTS HANDLE END		POSITION MANUAL	POSITION AUTO	FUNCTION
1–2	1	X		MAIN BREAKER NO. 1 CLOSE CIRCUIT
	2		X	MAIN BREAKER NO. 1 CLOSE CIRCUIT
3–4	3	X		SPARE
	4		X	MAIN BREAKER NO. 1 TRIP CIRCUIT
5–6	5	X		MAIN BREAKER NO. 2 CLOSE CIRCUIT
	6		X	MAIN BREAKER NO. 2 CLOSE CIRCUIT
7–8	7	X		SPARE
	8		X	MAIN BREAKER NO. 2 TRIP CIRCUIT
9–10	9	X		TIE BREAKER NO. 2 CLOSE CIRCUIT
	10		X	SPARE
11–12	11	X		TO SWGR PLC
	12		X	
13–14	13	X		SPARE
	14		X	
15–16	15	X		
	16		X	

X – INDICATES CONTACT CLOSED (MAINTAINED CONTACT)

TYPICAL BREAKER CONTROL SWITCH CS SES-1 AND RBCP

CONTACTS HANDLE END		POSITION CLOSE	POSITION NORMAL	POSITION TRIP	FUNCTION
1–2	1	X			CLOSE CIRCUIT
	2	X			SPARE
3–4	3			X	TRIP CIRCUIT
	4			X	
5–6	5	X	X		SPARE
	6		X	X	

X – INDICATES CONTACT CLOSED (SPRING RETURN FROM CLOSE AND TRIP TO NORMAL)

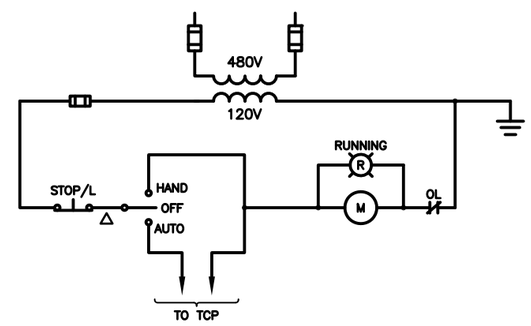

ROOF EXHAUST FAN REF-1

SIMILAR FOR REF-2, 3, 5, 6 AND SUPPLY FANS S-1, 2 & 3

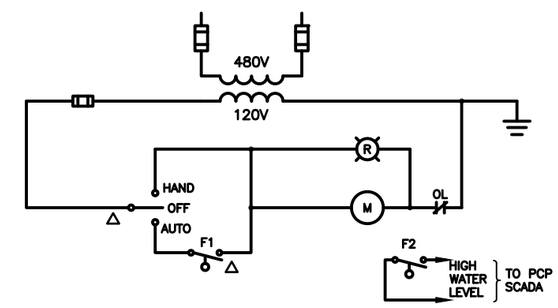

SUMP PUMP SP-1

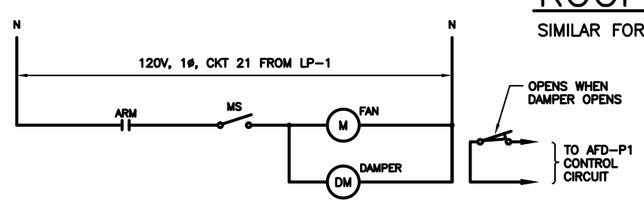

AFD VENTILATION SYSTEM

SIMILAR FOR AFD-P2, P3, AND P4

GREELEY AND HANSEN
1715 N. WESTSHORE BLVD., STE. 464
TAMPA, FLORIDA 33607
CERTIFICATE OF AUTHORIZATION NO. 37

0 1 2 3 5
SCALE IN FEET

DESIGNED RZ
DRAWN OC
CHECKED DD

NO.	DATE	APPD	REVISION

P.E. NAME: NORBERT VIRANYI P.E. NO. 72587
P.E. NAME:
DATE:

CITY OF TAMPA WASTEWATER DEPARTMENT
YBOR PUMPING STATION REHABILITATION

ELECTRICAL

CONTROL DIAGRAMS

FILE: YBOREE07
NO. E7
DATE JUNE 2011

FILE: YBOREE07 1:1 06/20/11 15:10 GH-A

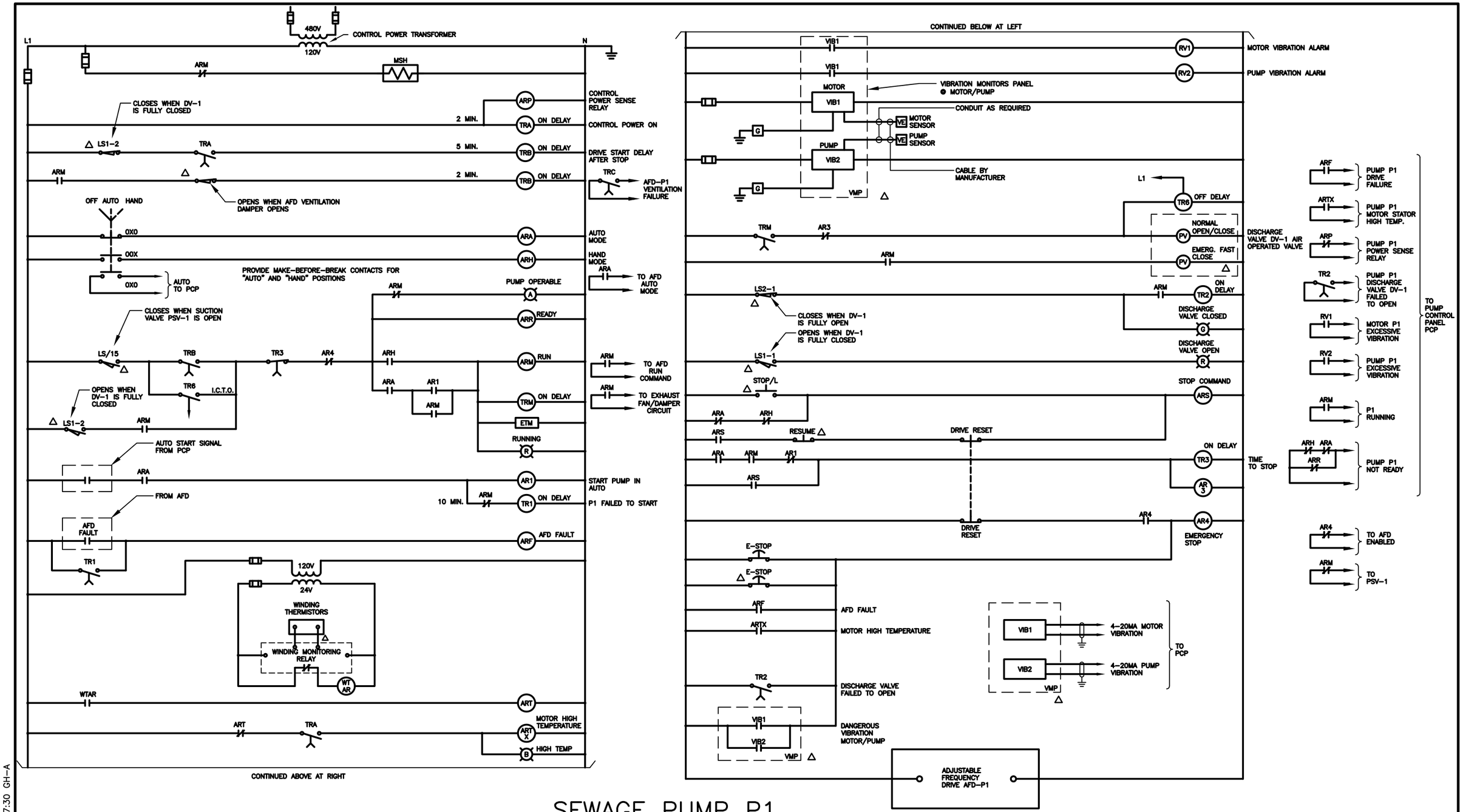

SEWAGE PUMP P1

SIMILAR FOR P2, P3, P4

FILE: YBOREE08 1:1 06/21/11 07:30 GH-A

GREELEY AND HANSEN
1715 N. WESTSHORE BLVD., STE. 464
TAMPA, FLORIDA 33607
CERTIFICATE OF AUTHORIZATION NO. 37

NO SCALE

DESIGNED	RZ
DRAWN	OC
CHECKED	DD

NO.	DATE	APPD	REVISION

P.E. NAME: NORBERT VIRANYI P.E. NO. 72587

P.E. NAME:

DATE:

CITY OF TAMPA WASTEWATER DEPARTMENT
YBOR PUMPING STATION REHABILITATION

ELECTRICAL

CONTROL DIAGRAMS

FILE: YBOREE08

NO. E8

DATE JUNE 2011

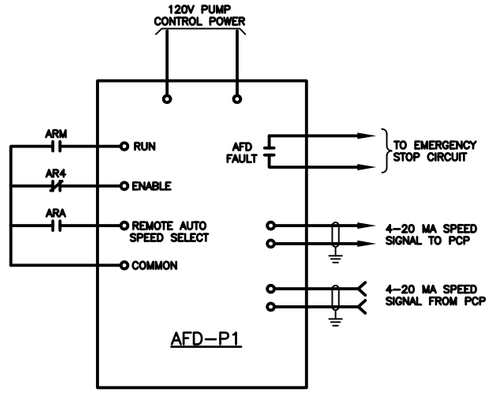

ADJUSTABLE FREQUENCY DRIVE AFD–P1 WIRING DIAGRAM

LIMIT SWITCH CONTACT DEVELOPMENT FOR PNEUMATIC DISCHARGE VALVE OPERATORS					
ROTOR NO.	CONTACT NO.	OPERATOR POSITION			CONTACT FUNCTION
		FULL OPEN	INTER–MEDIATE	FULL CLOSED	
LS1	1	—	—	—	VA. OPEN IND. LT
	2	▬	—	—	START DELAY CKT
	3	▬	▬	▬	RUN CKT
	4	▬	—	—	SPARE
LS2	1	▬	▬	—	VA. CLOSED IND. LT.
	2	—	—	▬	SPARE
	3	▬	▬	▬	SPARE
	4	—	—	▬	SPARE

LIMIT SWITCH CONTACT DEVELOPMENT FOR MOTORIZED SUCTION VALVE OPERATORS					
ROTOR NO.	CONTACT NO.	OPERATOR POSITION			CONTACT FUNCTION
		FULL OPEN	INTER–MEDIATE	FULL CLOSED	
1	1	▬	—	—	BYPASS CKT
	2	▬	—	—	PUMP PERMISSIVE
	3	—	▬	▬	INDICATOR LIGHT
	4	—	▬	▬	FORWARD (OPEN) LIMIT
2	5	—	—	▬	BYPASS CKT
	6	▬	—	—	SPARE
	7	▬	▬	—	INDICATOR LIGHT
	8	▬	▬	▬	REVERSE (CLOSED) LIMIT
3	9	▬	▬	—	AUXILIARY
	10	▬	▬	—	CP–Y02
	11	—	—	▬	AUXILIARY
	12	▬	—	—	AUXILIARY
4	13	—	▬	▬	AUXILIARY
	14	▬	▬	▬	CP–Y02
	15	▬	—	—	PUMP START CKT
	16	▬	—	—	AUXILIARY

TQ/C – CLOSING TORQUE SWITCH
TQ/O – OPENING TORQUE SWITCH
▬ INDICATES CONTACT CLOSED
— INDICATES CONTACT OPEN

SEE SCHEMATIC DIAGRAMS FOR FUNCTION OF THE "AUXILIARY" LIMIT SWITCH CONTACTS

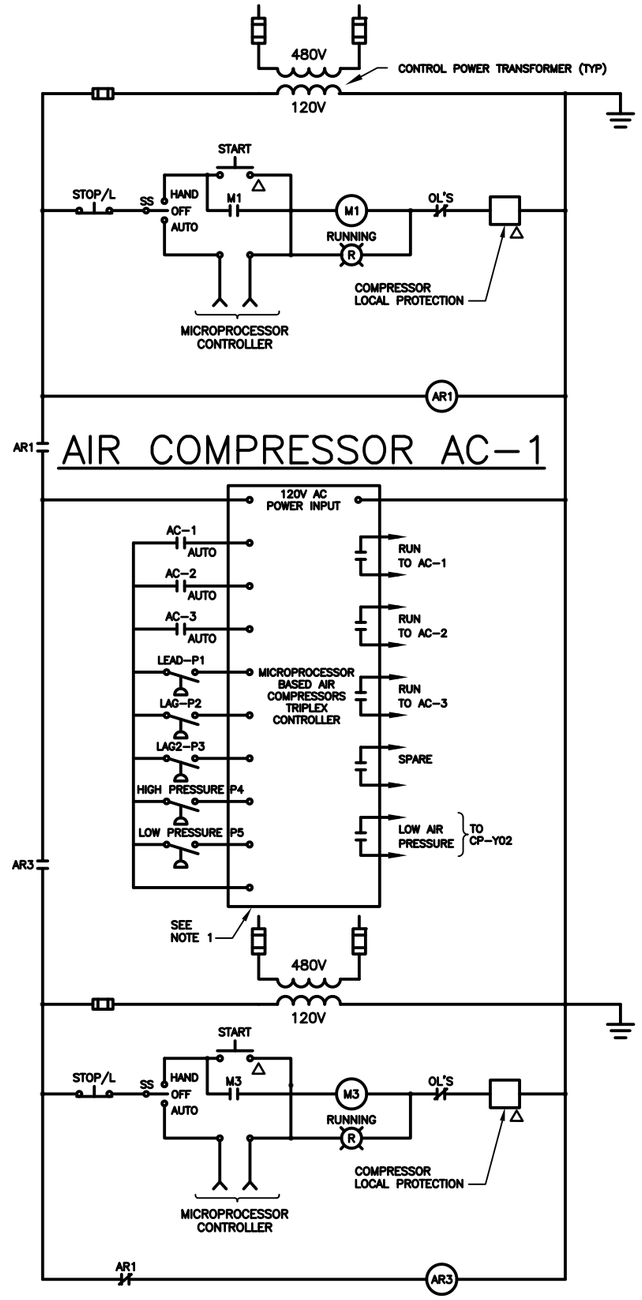

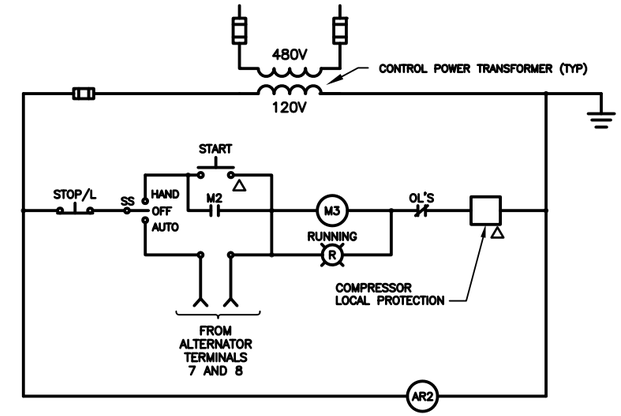

AIR COMPRESSOR AC–2

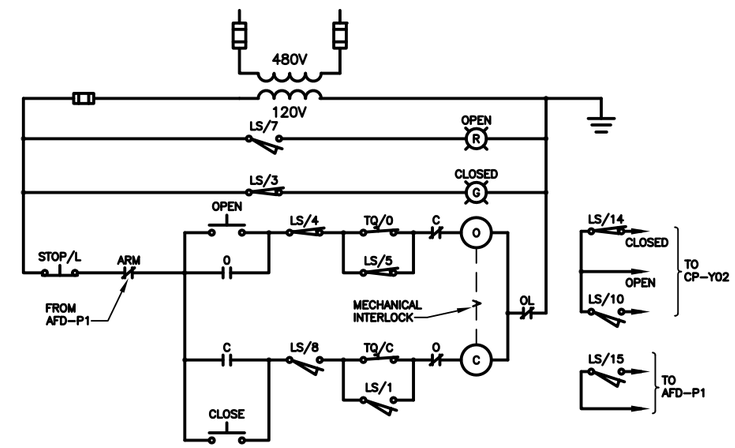

PUMP SUCTION VALVE PSV–1

SIMILAR FOR PSV–2, PSV–3 AND PSV–4

NOTES:

1. PROVIDE MICROPROCESSOR BASED CONTROLLER FOR CONTROLLING THE OPERATION OF THE THREE AIR COMPRESSORS. PROVIDE CONTROLLER WITH AN LCD DISPLAY AND A MINIMUM OF THREE FUNCTION KEYS. THE CONTROLLER IS TO BE EQUIPPED WITH EIGHT DIGITAL INPUTS AND A MINIMUM OF FOUR FORM "C" RELAY OUTPUTS. PROVIDE ONE RS485 MODBUS MASTER/SLAVE COMMUNICATION PORT.

GREELEY AND HANSEN
1715 N. WESTSHORE BLVD., STE. 464
TAMPA, FLORIDA 33607
CERTIFICATE OF AUTHORIZATION NO. 37

0 1 2 3 5
SCALE IN FEET

DESIGNED RZ
DRAWN OC
CHECKED DD

NO.	DATE	APPD	REVISION

P.E. NAME: NORBERT VIRANYI P.E. NO. 72587
P.E. NAME:
DATE:

CITY OF TAMPA WASTEWATER DEPARTMENT
YBOR PUMPING STATION REHABILITATION

ELECTRICAL

CONTROL DIAGRAMS

FILE: YBOREE09
NO. E9
DATE JUNE 2011

FILE: YBOREE09 1:1 06/21/11 07:37 GH–A

NOTES:

1. SEE DRAWING D1 FOR ELECTRICAL DEMOLITION PLAN.
2. EXISTING CONDUITS MAY BE REUSED FOR NEW WORK WHERE DETERMINED TO BE SERVICEABLE. OTHERWISE, ALL EXISTING CONDUIT AND WIRES ARE TO BE REMOVED. CONCEALED CONDUITS ARE TO BE ABANDONED IN PLACE, CUT OFF FLUSH WHERE EXITING EXPOSED AND CAPPED WITH CONCRETE.
3. CORE DRILL EXISTING WALLS AND FLOORS FOR ALL CONDUIT PENETRATIONS. PROVIDE WATERTIGHT FITTINGS FOR ALL EXTERIOR WALL PENETRATIONS.
4. TURN UP DUCT BANK ENCASEMENT 2'–0" ABOVE GRADE. END ENCASEMENT AND TRANSITION TO RIGID ALUMINUM CONDUITS UP TO THE PULLBOX.
5. ALL PHYSICAL WIRING HAS NOT BEEN SHOWN ON THE PLANS DUE TO SPACE LIMITATIONS AND THE POSSIBILITY FOR REUSING EXISTING CONDUITS. REFER TO THE ONE LINE DIAGRAMS, BLOCK WIRING DIAGRAMS AND CONDUIT AND CABLE SCHEDULES FOR COMPLETE WIRING REQUIREMENTS.
6. THE EXISTING METERING PANEL AND PUMP CONTROL PANELS BEING DEMOLISHED CONTAIN WIRING FOR STATUS AND ALARM SIGNALS THAT ARE TO BE RECONNECTED TO CP–Y02. FIELD VERIFY WHICH SIGNALS TERMINATE AT EACH PANEL, INTERCEPT AND EXTEND WIRING TO CP–Y02. PROVIDE CONDUIT, JUNCTION BOXES AND WIRING AS REQUIRED. SIGNALS TO BE RECONNECTED ARE AS FOLLOWS:
   WEST METER FLOW
   COMBUSTIBLE GAS % LEL
   HYPO TANK LEVEL
   WET WELL HIGH WATER
   ODOR CONTROL FAN FAILED
   ODOR CONTROL TOWER 2
   DRY WELL HIGH WATER
   ODOR CONTROL TOWER 1
   COMBUSTIBLE GAS DETECTION FAILURE
   AIR COMPRESSOR LOW PRESSURE
   50% COMBUSTIBLE GAS ALARM
   ODOR CONTROL FAILED
   25% LEL ALARM
7. EXISTING WIRING FOR SIGNALS DESCRIBED IN NOTE 6 WHICH ARE FOUND NOT TO BE INSTALLED IN CONDUIT ALONG THEIR ENTIRE ROUTE ARE TO BE PULLED BACK TO A CONVENIENT LOCATION, CONDUIT AND BOXES PROVIDED AS REQUIRED AND THE WIRING RE–INSTALLED OR REPLACED.
8. THE HEAT GENERATED BY EACH OF THE ADJUSTABLE FREQUENCY DRIVES IS TO BE INDIVIDUALLY DUCTED OFF THE TOP OF THE AFD THRU THE EXISTING WALL DIRECTLY TO THE REAR OF THE AFD. PROVIDE A MOTORIZED DAMPER AND FAN FOR EACH AFD THAT OPENS/STARTS WHEN THE ASSOCIATED AFD RECEIVES A START COMMAND. THE MOTORIZED DAMPERS ARE TO BE POWERED FROM THE LP–1. FOR AFD–P4 ROUTE THE DUCT THROUGH THE EXISTING BLANKED OFF LOUVER AT THE NORTH END OF THE EAST WALL LOUVER/DAMPER COMBINATION.
9. FOR ACTUAL LOCATION OF EXISTING SUPPLY FANS S–1 AND S–2, SEE DWG E2. CORE DRILL THE WALL BETWEEN THE SCREEN ROOM AND PUMP ROOM IF NEW CONDUITS ARE REQUIRED. SEAL AROUND THE CONDUITS WHERE PENETRATING THE WALL TO MAINTAIN THE INTEGRITY OF THE AFFECTED AREAS.
10. SEE DRAWING E13 FOR PLAN LOCATION OF EXHAUST FANS.
11. WHERE FIELD DETERMINED THAT ADDITIONAL BRANCH CIRCUIT AND MISCELLANEOUS WIRING IS NEEDED FOR RECONNECTING EXISTING LOADS THAT HAVE NOT BEEN IDENTIFIED ON THE PLAN, PROVIDE WIRE AND CONDUIT AS REQUIRED. UPDATE THE LP1 PANELBOARD DIRECTORY AND CONDUIT AND CABLE SCHEDULE TO REFLECT ALL CHANGES.
12. PROVIDE CONCRETE HOUSEKEEPING PADS FOR THE FOLLOWING ELECTRICAL EQUIPMENT AS DETAILED ON DRAWING G5:
    480V SWITCHGEAR SES–1
    480V MOTOR CONTROL CENTER MCC–1
    AFD–P1, P2, P3, P4
    CP–Y01 AN CP–Y02
    BP–Y01
    TRANSFORMER LT1

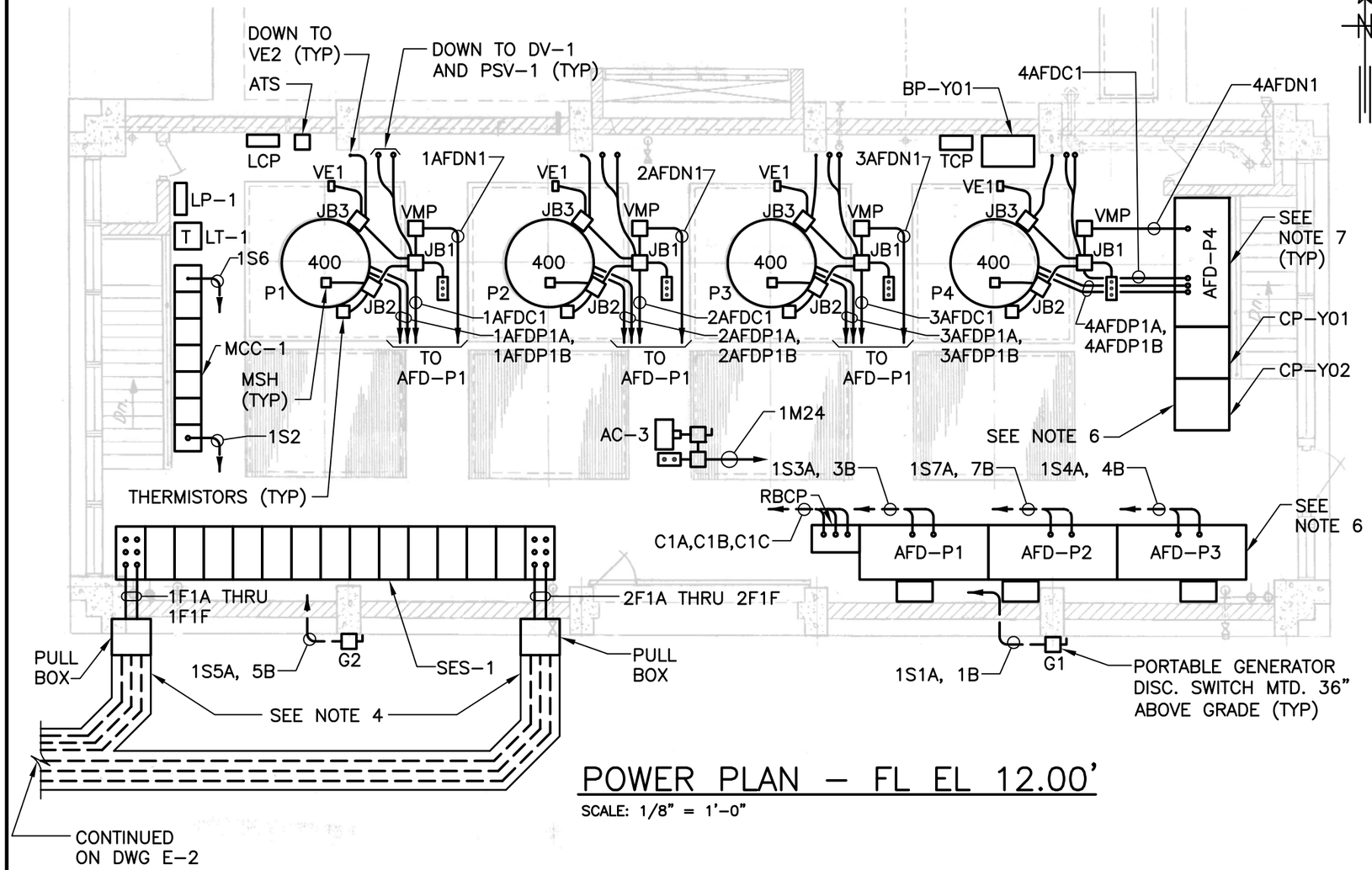

POWER PLAN – FL EL 12.00'

SCALE: 1/8" = 1'–0"

FILE: YBOREE10 1:1 06/21/11 10:25 GH–A

GREELEY AND HANSEN
1715 N. WESTSHORE BLVD., STE. 464
TAMPA, FLORIDA 33607
CERTIFICATE OF AUTHORIZATION NO. 37

0 4 8 16
SCALE IN FEET

DESIGNED RZ
DRAWN OC
CHECKED DD

NO.	DATE	APPD	REVISION

P.E. NAME: NORBERT VIRANYI P.E. NO. 72587
P.E. NAME:
DATE:

CITY OF TAMPA WASTEWATER DEPARTMENT
YBOR PUMPING STATION REHABILITATION

ELECTRICAL

POWER PLAN – FL EL 12.00'

FILE: YBOREE10

NO. E10

DATE JUNE 2011

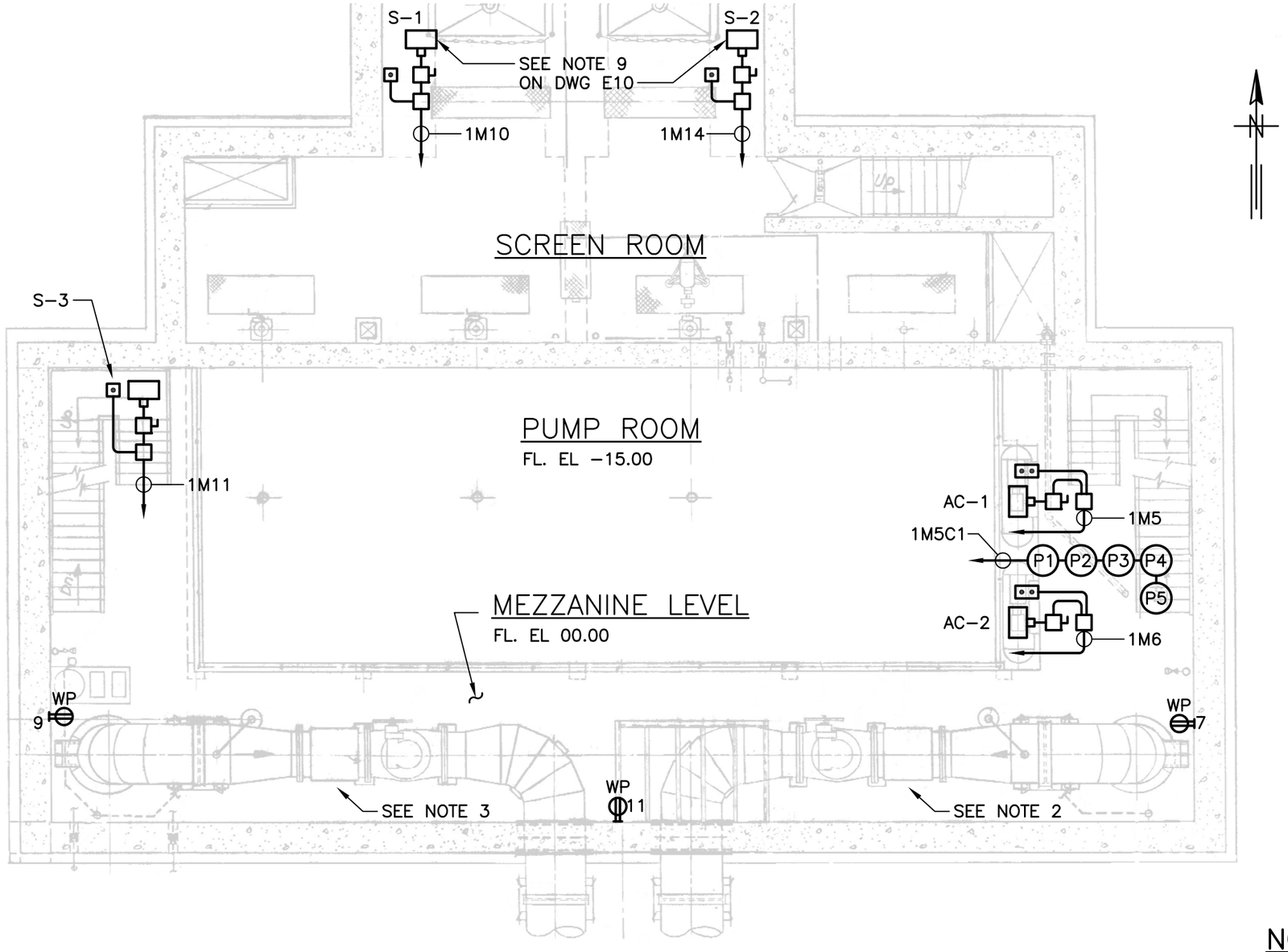

POWER PLAN – FL EL 00.00'

SCALE: 1/8"=1'-0"

NOTES:

1. SEE NOTES ON DWG E-10.
2. EXISTING EAST FLOW METER TO BE REMOVED. SEE DEMOLITION DRAWING FOR DETAIL.
3. EXISTING WEST FLOW METER TO REMAIN. RECONNECT AS SHOWN AND REQUIRED. SEE INSTRUMENTATION DRAWING FOR DETAIL.

GREELEY AND HANSEN
1715 N. WESTSHORE BLVD., STE. 464
TAMPA, FLORIDA 33607
CERTIFICATE OF AUTHORIZATION NO. 37

0 4 8 16
SCALE IN FEET

DESIGNED	RZ
DRAWN	OC
CHECKED	DD

NO.	DATE	APPD	REVISION

P.E. NAME: NORBERT VIRANYI P.E. NO. 72587

P.E. NAME:
DATE:

CITY OF TAMPA WASTEWATER DEPARTMENT
YBOR PUMPING STATION REHABILITATION

ELECTRICAL

POWER PLAN – FL EL 00.00'

FILE: YBOREE11

NO. E11

DATE JUNE 2011

FILE: YBOREE11 1:1 06/21/11 10:19 GH-A

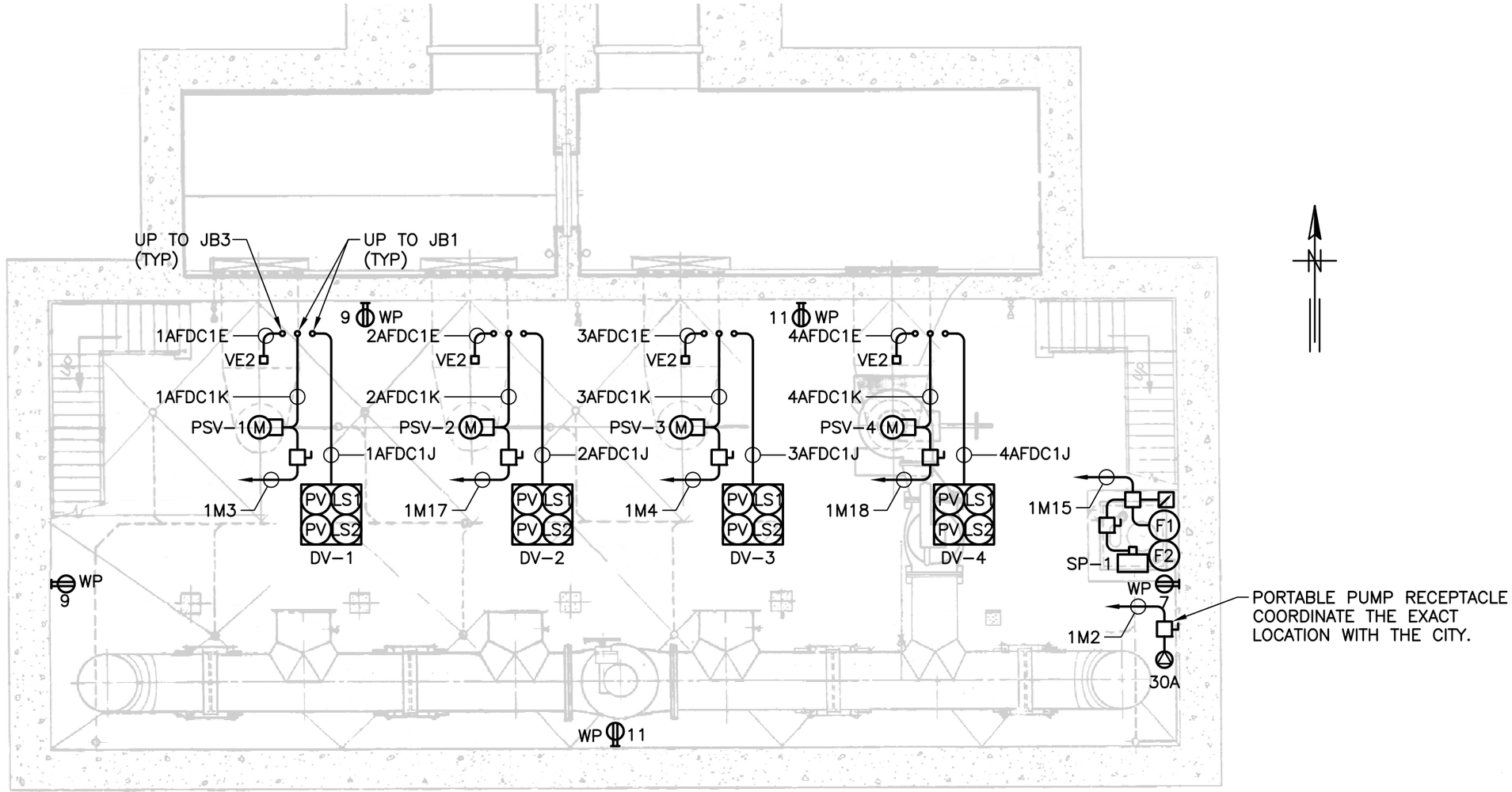

POWER PLAN – FL EL –15.00'

SCALE: 1/8"=1'–0"

NOTES:

1. SEE NOTES ON DWG E–10.

GREELEY AND HANSEN
1715 N. WESTSHORE BLVD., STE. 464
TAMPA, FLORIDA 33607
CERTIFICATE OF AUTHORIZATION NO. 37

0 4 8 16
SCALE IN FEET

DESIGNED	RZ
DRAWN	OC
CHECKED	DD

NO.	DATE	APPD	REVISION

P.E. NAME: NORBERT VIRANYI P.E. NO. 72587
P.E. NAME:
DATE:

CITY OF TAMPA WASTEWATER DEPARTMENT
YBOR PUMPING STATION REHABILITATION

ELECTRICAL

POWER PLAN – FL EL –15.00'

FILE: YBOREE12
NO. E12
DATE JUNE 2011

FILE: YBOREE12 1:1 06/21/11 09:28 GH–A

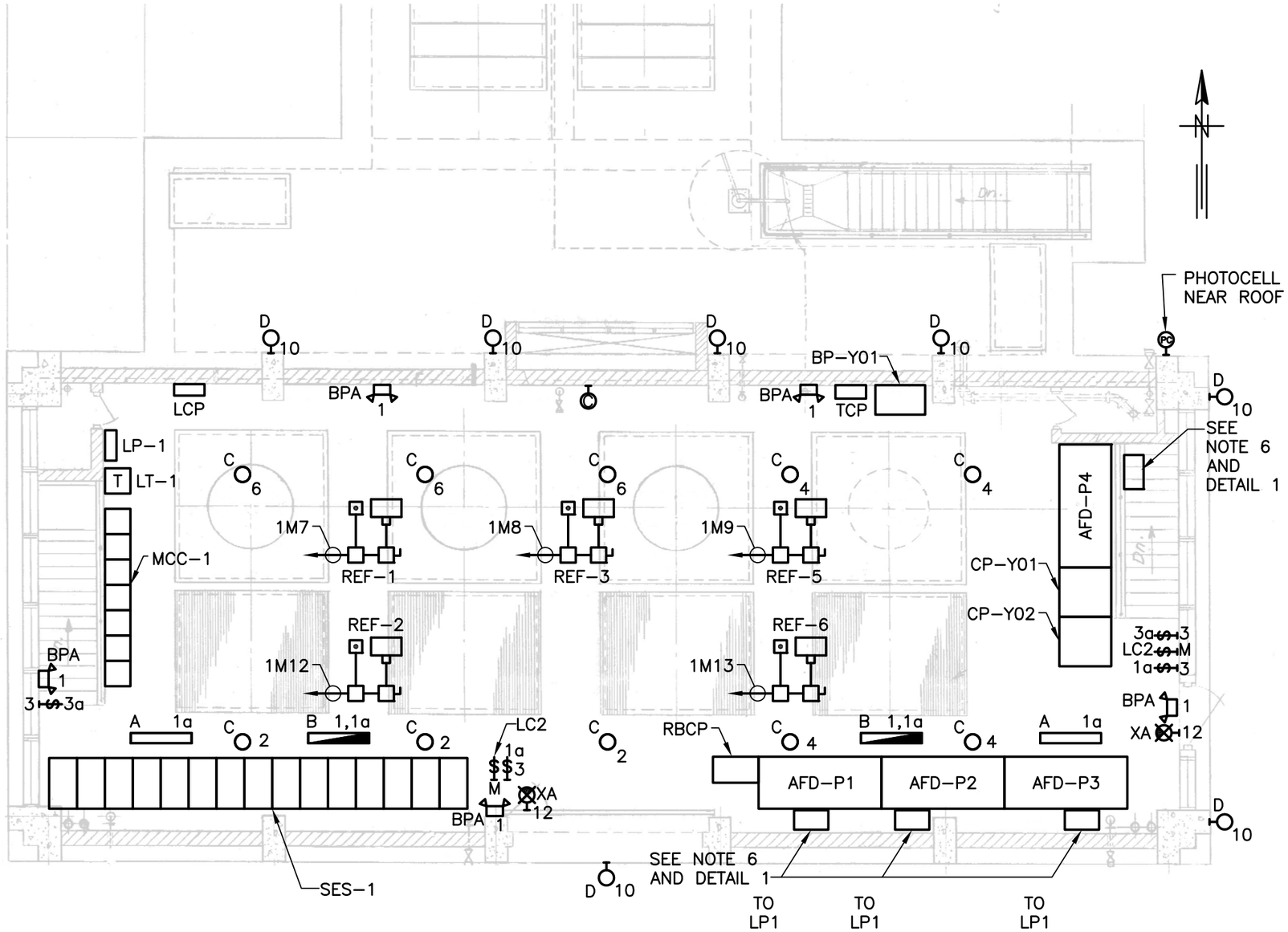

LIGHTING PLAN – FL EL 12.00'

SCALE: 1/8" = 1'-0"

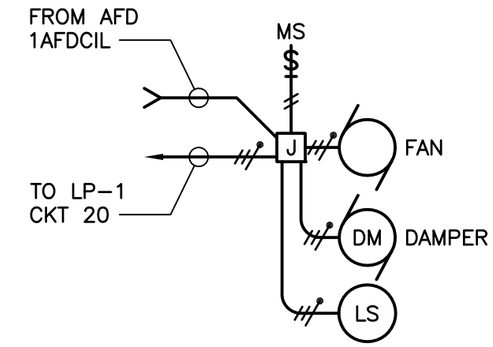

DETAIL 1

SHOWN FOR AFD-P1
SIMILAR FOR AFD-P2, P3, & P4.

NOTES:

1. ALL EXISTING LIGHTING FIXTURES, WIRING DEVICES AND ASSOCIATED BRANCH CIRCUIT WIRING IS TO BE REMOVED. PROVIDE NEW LIGHTING FIXTURES AS SHOWN REUSING EXISTING OUTLET BOXES AND CONDUITS WHEREVER POSSIBLE. PROVIDE NEW CONDUIT, BOXES AND FITTINGS AS NEEDED AND NEW BRANCH CIRCUIT WIRING THROUGHOUT.
2. INSTALL NEW LIGHTING FIXTURES AT THE SAME ELEVATIONS AS THOSE BEING REMOVED. ADJUST VERTICAL AND HORIZONTAL ALIGNMENT WHERE REQUIRED TO CLEAR ALL NEW AND EXISTING OBSTRUCTIONS.
3. PROVIDE NEW FLUORESCENT LIGHTING IN FRONT OF SWITCHGEAR SES-1 AND THE ADJUSTABLE FREQUENCY DRIVES (AFDS) SUPPORTED FROM CHANNEL FASTENED TO THE WALL. AVOID INTERFERRING WITH THE BREAKER LIFT ASSEMBLY ON THE SWITCHGEAR OR EXHAUST DUCTS ON THE AFDS.
4. ALL BRANCH CIRCUIT WIRING SHALL BE A MINIMUM OF #12 AWG THROUGHOUT IN A MINIMUM 3/4 INCH CONDUIT.
5. PROVIDE AN EQUIPMENT GROUNDING CONDUCTOR IN ALL RACEWAYS.
6. SEE NOTE 8 ON CONTRACT DRAWING E10 FOR THE MOTORIZED DAMPER/FAN REQUIREMENTS.

GREELEY AND HANSEN
1715 N. WESTSHORE BLVD., STE. 464
TAMPA, FLORIDA 33607
CERTIFICATE OF AUTHORIZATION NO. 37

0 4 8 16
SCALE IN FEET

DESIGNED	RZ
DRAWN	TT
CHECKED	DD

NO.	DATE	APPD	REVISION

P.E. NAME: NORBERT VIRANYI P.E. NO. 72587
P.E. NAME:
DATE:

CITY OF TAMPA WASTEWATER DEPARTMENT
YBOR PUMPING STATION REHABILITATION

ELECTRICAL

LIGHTING PLAN – FL EL 12.00'

FILE: YBOREE13

NO. E13

DATE JUNE 2011

FILE: YBOREE13 1:1 06/21/11 09:30 GH-A

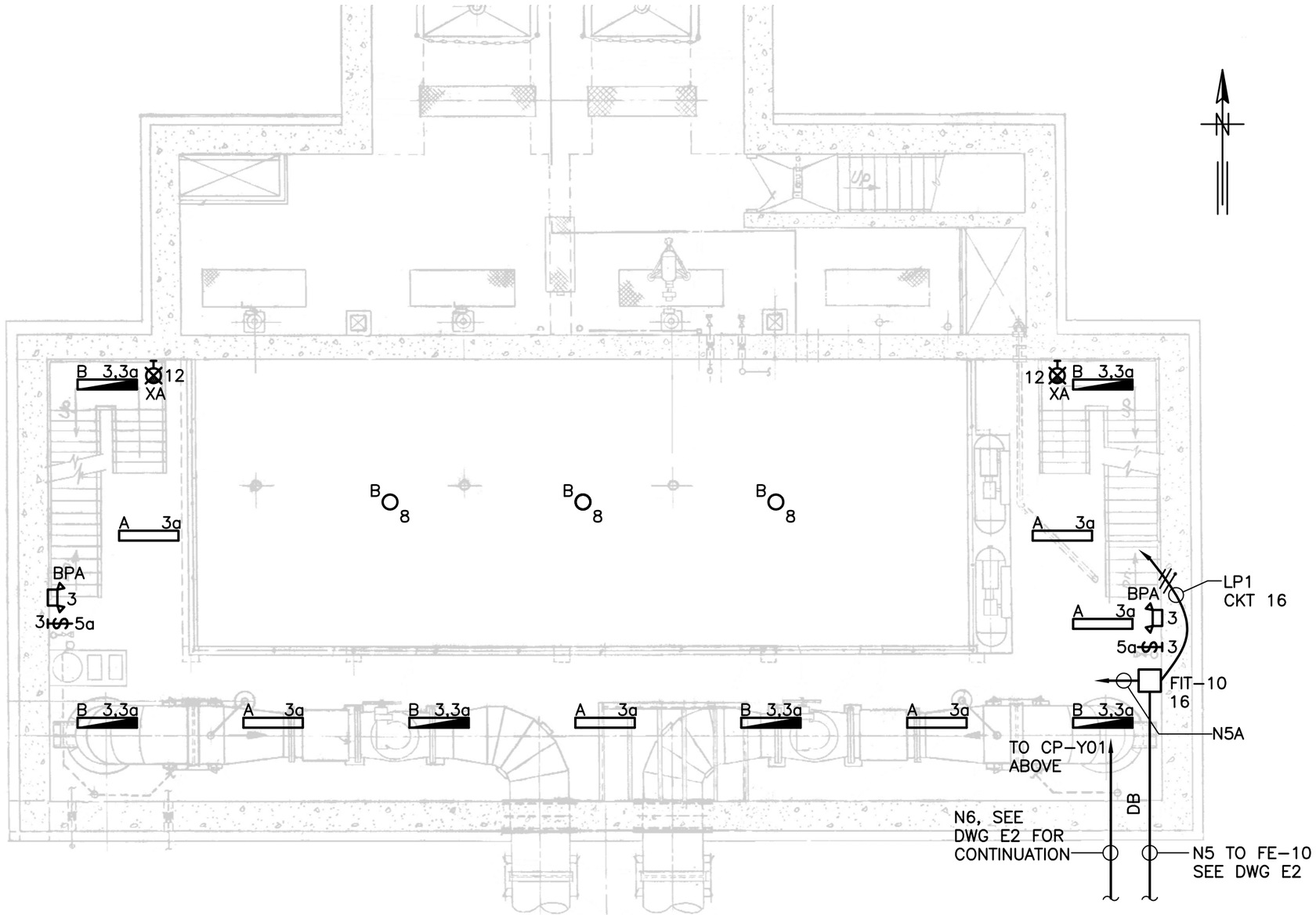

LIGHTING PLAN – FL EL 00.00'

SCALE: 1/8"=1'-0"

NOTES:

1. SEE NOTES ON DWG E13

FILE: YBOREE14 1:1 06/21/11 08:12 GH-A

GREELEY AND HANSEN
1715 N. WESTSHORE BLVD., STE. 464
TAMPA, FLORIDA 33607
CERTIFICATE OF AUTHORIZATION NO. 37

0 4 8 16
SCALE IN FEET

DESIGNED RZ
DRAWN TT
CHECKED DD

NO.	DATE	APPD	REVISION

P.E. NAME: NORBERT VIRANYI P.E. NO. 72587
P.E. NAME:
DATE:

CITY OF TAMPA WASTEWATER DEPARTMENT
YBOR PUMPING STATION REHABILITATION

ELECTRICAL

LIGHTING PLAN – FL EL 00.00'

FILE: YBOREE14

NO. E14

DATE JUNE 2011

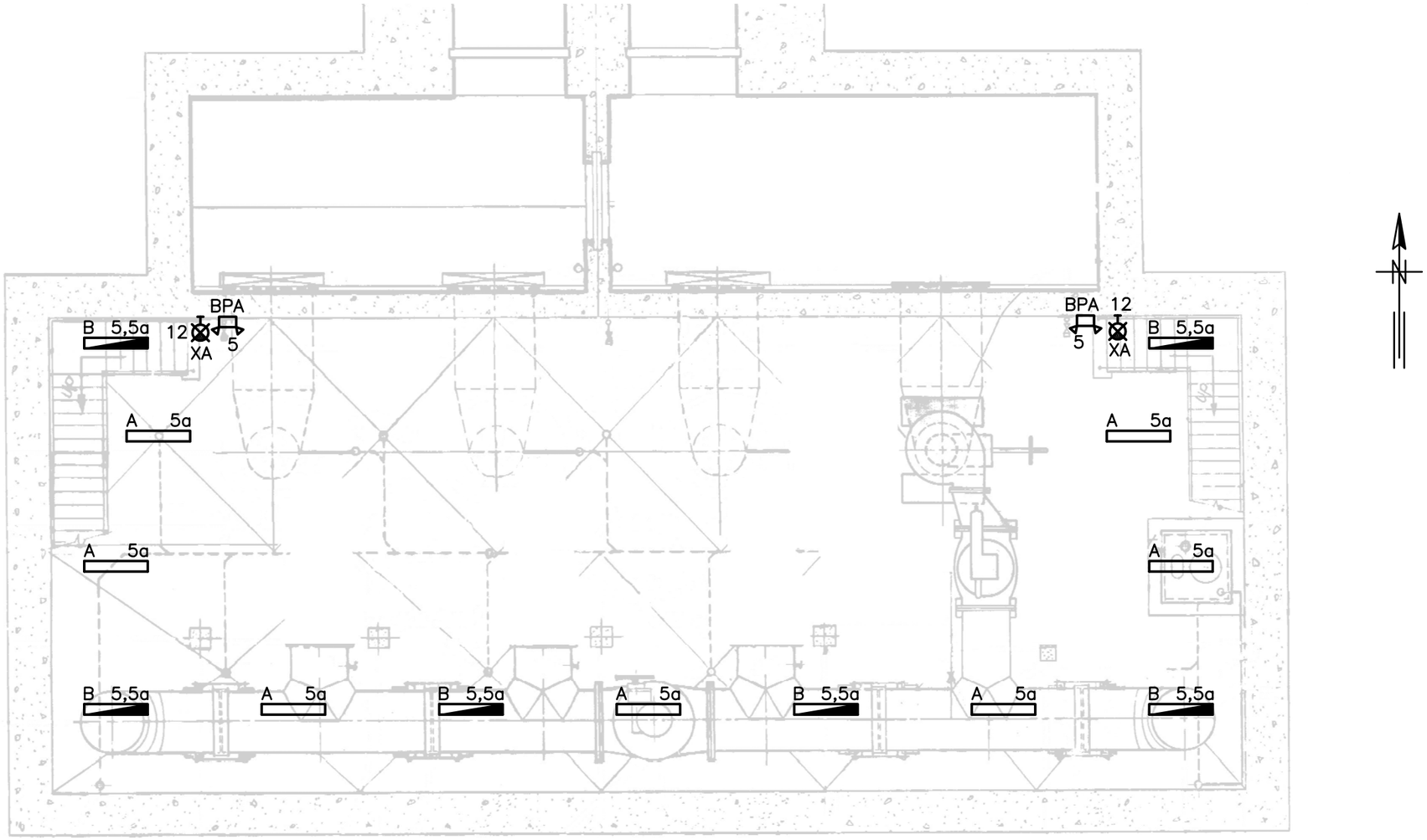

POWER AND LIGHTING PLAN – FL EL –15.00'

SCALE: 1/8"=1'–0"

NOTES:

1. SEE NOTES ON DWG E13

FILE: YBOREE15 1:1 06/21/11 09:31 GH–A

GREELEY AND HANSEN
1715 N. WESTSHORE BLVD., STE. 464
TAMPA, FLORIDA 33607
CERTIFICATE OF AUTHORIZATION NO. 37

0 4 8 16
SCALE IN FEET

DESIGNED RZ
DRAWN TT
CHECKED DD

NO.	DATE	APPD	REVISION

P.E. NAME: NORBERT VIRANYI P.E. NO. 72587
P.E. NAME:
DATE:

CITY OF TAMPA WASTEWATER DEPARTMENT
YBOR PUMPING STATION REHABILITATION

ELECTRICAL

LIGHTING PLAN – FL EL –15.00'

FILE: YBOREE15

NO. E15

DATE JUNE 2011

LIGHTING FIXTURE SCHEDULE

MARK	MANUFACTURER OR EQUAL	CATALOG NUMBER	VOLTS	NO.	LAMPS WATTS	LAMPS TYPE	MOUNTING	DESCRIPTION
A	METALUX	VT3232DRUNV-ER81WLM4	120V	2	32WT8	FLUORESCENT	SUSPENDED	4'-0" VAPORTIGHT FIXTURE WITH FIBERGLASS HOUSING T8 ELECTRONIC RAPID START BALLAST, AND ACRYLIC PRISMATIC REFRACTOR WRAP AROUND LENS.
B	METALUX	VT3232DRUNVE-LER81WLM4	120V	2	32WT8	FLUORESCENT	SUSPENDED	SAME AS TYPE "A" EXCEPT W/EMERGENCY BATTERY PACK
C	LUMARK	MP55SA23M-400MTORSCRWG23	120V	1	400	METAL HALIDE	PENDANT	HIGH BAY HID FIXTURE WITH HEAVY DUTY FORMED STEEL HOUSING AND FIELD ADJUSTABLE REFLECTOR, PULSE START BALLAST, OPEN RATED SOCKET AND SUITABLE FOR WET/DAMP LOCATIONS.
D	LUMARK	MPWPFC200MT-F1WG/WPFC	120V	1	200	METAL HALIDE	SURFACE WALL	WALL PACK FIXTURE. UL LISTED FOR WET LOCATIONS. RUGGED DIE CAST ALUMINUM HOUSING WITH STAINLESS STEEL HARDWARE AND POWDER COAT FINISH.
BPA	SURE LITES	UMB-7	120V	2	9W	6VDC 29-03 INCAND	SURFACE WALL	EMERGENCY LIGHTING BATTERY PACK WITH NEMA 4X INDUSTRIAL FIBERGLASS ENCLOSURE, 6VDC LEAD CALCIUM MAINTENANCE FREE BATTERY, SOLID CHARGER, TEST PUSHBUTTON POWER ON INDICATING LIGHT, INTEGRAL FIXTURE HEADS OF HIGH IMPACT THERMOPLASTIC AND CAPABLE OF PROVIDING EMERGENCY ILLUMINATION FOR 1-1/2 HOURS DURING LOSS OF NORMAL POWER AT 87-1/2% OF RATED DC VOLTAGE.
XA	SURE LITES	CAX-717-000-R	120V	1	7	LED	SURFACE WALL	SELF POWER EMERGENCY EXIT SIGN WITH DIE CAST ALUMINUM HOUSING, STENCILED BRUSHED ALUMINUM FACE PLATE WITH RED LETTERS, NICKEL CADMIUM MAINTENANCE FREE BATTERY, SOLID STATE INTEGRAL CHARGER AND TEST SWITCH.

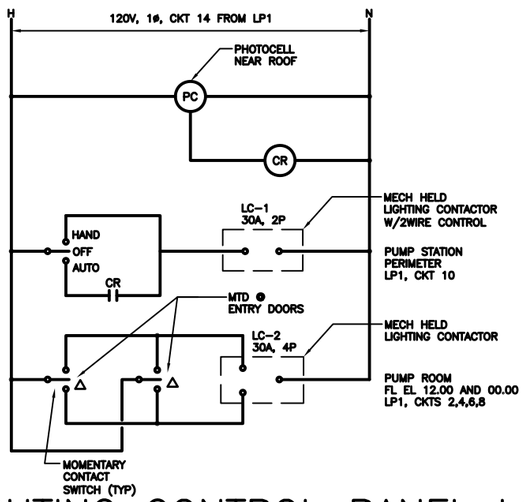

LIGHTING CONTROL PANEL LCP

NOTE: DEVICES ARE MOUNTED ON OR IN THE LCP UNLESS OTHERWISE NOTED.

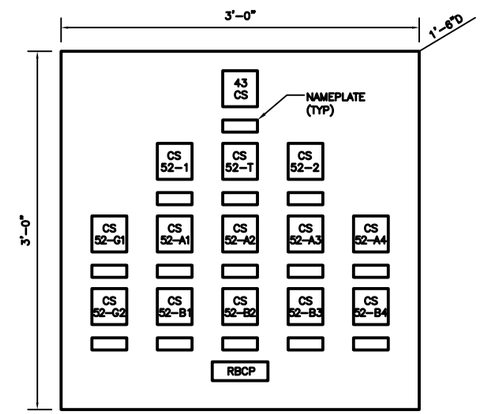

REMOTE BREAKER CONTROL PANEL RBCP FRONT ELEVATION

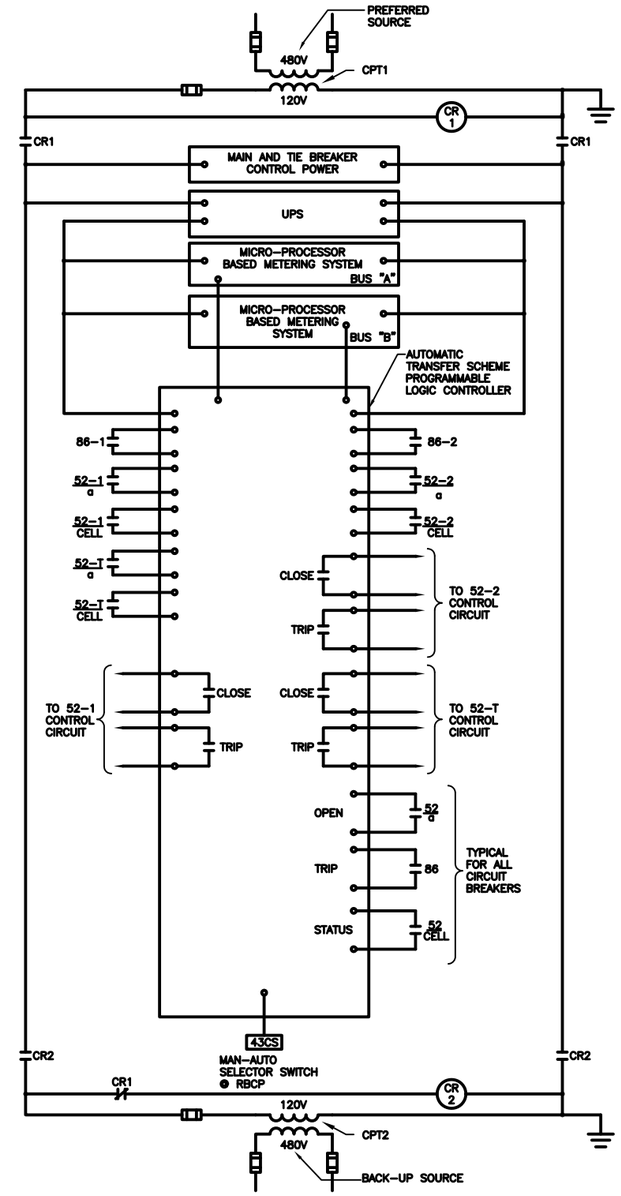

MAIN AND TIE BREAKER CONTROL POWER AND AUTO TRANSFER SCHEME SYSTEM

CIRCUIT SCHEDULE – PANEL LP1 — 150A MAIN BREAKER, 208/120V, 3PHASE, 4 WIRE W/GRD

PHASE A CKT	WATTS	BRKR	SERVES	PHASE B CKT	WATTS	BRKR	SERVES	PHASE C CKT	WATTS	BRKR	SERVES
1	566	20A	LIGHTING	3	832	20A	LIGHTING	5	771	20A	LIGHTING
2	1356	20A	LIGHTING	4	1808	20A	LIGHTING	6	1356	20A	LIGHTING
7	800	20A	RECEPTACLES	9	800	20A	RECEPTACLES	11	800	20A	RECEPTACLES
8	1356	20A	LIGHTING	10	1589	20A	LIGHTING	12	300	20A	EXIT SIGNS
13	1000	20A	CP-Y01	15	1000	20A	CP-Y01	17	1000	20A	CP-Y02
14	500	20A	LTG CONTACTOR PANEL	16	500	20A	FIT-100	18	500	20A	BP-Y01
19	1000	20A	CP-Y02	21		20A	SPARE	23	1000	20A	AFD-P3
20	1000	20A	AFD-P1	22	1000	20A	AFD-P2	24	1000	20A	AFD-P4
25		20A	SPARE	27		20A	SPARE	27		20A	SPARE
26		20A	SPARE	28		20A	SPARE	28		20A	SPARE
31		20A	SPACE	33		20A	SPACE	33		20A	SPACE
32		20A	SPACE	34		20A	SPACE	34		20A	SPACE
37		20A	SPACE	39		20A	SPACE	41		20A	SPACE
38		20A	SPACE	40		20A	SPACE	42		20A	SPACE
	7578				7529				6727		

A	7578	
B	7529	
C	6727	
TOTAL	21834	WATTS

GREELEY AND HANSEN
1715 N. WESTSHORE BLVD., STE. 464
TAMPA, FLORIDA 33607
CERTIFICATE OF AUTHORIZATION NO. 37

0 4 8 16
SCALE IN FEET

DESIGNED RZ
DRAWN TT
CHECKED DD

NO.	DATE	APPD	REVISION

P.E. NAME: NORBERT VIRANYI P.E. NO. 72587
P.E. NAME:
DATE:

CITY OF TAMPA WASTEWATER DEPARTMENT
YBOR PUMPING STATION REHABILITATION

ELECTRICAL

MISCELLANEOUS

FILE: YBOREE16

NO. E16

DATE JUNE 2011

FILE: YBOREE16 1:1 06/21/11 08:20 GH-A

CONDUIT NUMBER	CONDUIT SIZE	CONDUCTOR QUANTITY & SIZE	FROM	TO	REMARKS
		INCOMING SERVICE FEEDER			
1F1A	4"	3-500KCM, 1#3/0G	TECO TRANSFORMER	480V SES-1, MAIN BREAKER "A"	
1F1B	4"	3-500KCM, 1#3/0G	TECO TRANSFORMER	480V SES-1, MAIN BREAKER "A"	
1F1C	4"	3-500KCM, 1#3/0G	TECO TRANSFORMER	480V SES-1, MAIN BREAKER "A"	
1F1D	4"	3-500KCM, 1#3/0G	TECO TRANSFORMER	480V SES-1, MAIN BREAKER "A"	
1F1E	4"	3-500KCM, 1#3/0G	TECO TRANSFORMER	480V SES-1, MAIN BREAKER "A"	
1F1F	4"	3-500KCM, 1#3/0G	TECO TRANSFORMER	480V SES-1, MAIN BREAKER "A"	
1F1G	2"	CABLE PER TECO REQUIREMENTS	TECO TRANSFORMER	TECO METER SOCKET	ON P.S. EXTERIOR WALL
2F1A	4"	3-500KCM, 1#3/0G	TECO TRANSFORMER	480V SES-1, MAIN BREAKER "B"	
2F1B	4"	3-500KCM, 1#3/0G	TECO TRANSFORMER	480V SES-1, MAIN BREAKER "B"	
2F1C	4"	3-500KCM, 1#3/0G	TECO TRANSFORMER	480V SES-1, MAIN BREAKER "B"	
2F1D	4"	3-500KCM, 1#3/0G	TECO TRANSFORMER	480V SES-1, MAIN BREAKER "B"	
2F1E	4"	3-500KCM, 1#3/0G	TECO TRANSFORMER	480V SES-1, MAIN BREAKER "B"	
2F1F	4"	3-500KCM, 1#3/0G	TECO TRANSFORMER	480V SES-1, MAIN BREAKER "B"	
2F1G	2"	CABLE PER TECO REQUIREMENTS	TECO TRANSFORMER	TECO METER SOCKET	ON P.S. EXTERIOR WALL
		480V MAIN SERVICE SWITCHGEAR SES-1			
1S1A	3 1/2"	3-500KCM, 1#1/0G	SES-1, BUS "A"	GENERATOR DISC. SW.	
1S1B	3 1/2"	3-500KCM, 1#1/0G	SES-1, BUS "A"	GENERATOR DISC. SW.	
1S2	3 1/2"	3-500KCM, 1#3G	SES-1, BUS "A"	MCC-1	
1S3A	3 1/2"	3-500KCM, 1#1/0G	SES-1, BUS "A"	AFD-P1	
1S3B	3 1/2"	3-500KCM, 1#1/0G	SES-1, BUS "A"	AFD-P1	
1S4A	3 1/2"	3-500KCM, 1#1/0G	SES-1, BUS "A"	AFD-P3	
1S4B	3 1/2"	3-500KCM, 1#1/0G	SES-1, BUS "A"	AFD-P3	
1S5A	3 1/2"	3-500KCM, 1#1/0G	SES-1, BUS "B"	GENERATOR DISC. SW.	
1S5B	3 1/2"	3-500KCM, 1#1/0G	SES-1, BUS "B"	GENERATOR DISC. SW.	
1S6	3 1/2"	3-500KCM, 1#3G	SES-1, BUS "B"	MCC-1	
1S7A	3 1/2"	3-500KCM, 1#1/0G	SES-1, BUS "B"	AFD-P2	
1S7B	3 1/2"	3-500KCM, 1#1/0G	SES-1, BUS "B"	AFD-P2	
1S8A	3 1/2"	3-500KCM, 1#1/0G	SES-1, BUS "B"	AFD-P4	
1S8B	3 1/2"	3-500KCM, 1#1/0G	SES-1, BUS "B"	AFD-P4	
		ADJUSTABLE FREQUENCY DRIVE AFD-P1			
1AFDP1A	3 1/2"	3-500KCM, 1#1/0G	AFD-P1	SEWAGE PUMP P1	
1AFDP1B	3 1/2"	3-500KCM, 1#1/0G	AFD-P1	SEWAGE PUMP P1	
1AFDC1	1 1/2"	42#14 (4 SPARE), 1#14G	AFD-P1	CONTROL TB @ MOTOR	COIL SPARES
1AFDC1A	3/4"	6#14, 1#14G	CONTROL TB @ MOTOR	PUSHBUTTON STATION	
1AFDC1B	3/4"	12#14, 1#14G	CONTROL TB @ MOTOR	VIBRATION MONITORING PNL VMP	
1AFDC1C	–	CABLES BY MANUFACTURER	VMP	JB @ PUMP/MOTOR	CONDUIT AS REQUIRED
1AFDC1D	–	CABLES BY MANUFACTURER	JB @ PUMP/MOTOR	MOTOR VIBRATION SENSOR	CONDUIT AS REQUIRED
1AFDC1E	–	CABLES BY MANUFACTURER	JB @ PUMP/MOTOR	PUMP VIBRATION SENSOR	CONDUIT AS REQUIRED
1AFDC1F	3/4"	4#14, 1#14G	CONTROL TB @ MOTOR	JB @ MOTOR	
1AFDC1G	3/4"	2#14, 1#14G	JB @ MOTOR	MOTOR SPACE HEATER	
1AFDC1H	3/4"	2#14, 1#14G	JB @ MOTOR	MOTOR TEMP SWITCH	
1AFDC1J	3/4"	10#14, 1#14G	CONTROL TB @ MOTOR	DISCH. VALVE DV-1	
1AFDC1K	3/4"	4#14, 1#14G	CONTROL TB @ MOTOR	SUNCTION VALVE PSV-1	
1AFDC1L	3/4"	4#14, 1#14G	AFD-P1	VENT FAN/DAMPER CIRCUIT	
1AFDN1	1"	2-2/C#16SH	AFD-P1	VMP	
1AFDC2	1 1/4"	28#14 (6 SPARE), 1#14G	AFD-P1	CP-Y02	
1AFDN2	1"	4-2/C#16SH	AFD-P1	CP-Y02	
		ADJUSTABLE FREQUENCY DRIVE AFD-P2			
2AFDP1A	3 1/2"	3-500KCM, 1#1/0G	AFD-P2	SEWAGE PUMP P2	
2AFDP1B	3 1/2"	3-500KCM, 1#1/0G	AFD-P2	SEWAGE PUMP P2	
2AFDC1	1 1/2"	42#14 (4 SPARE), 1#14G	AFD-P2	CONTROL TB @ MOTOR	COIL SPARES
2AFDC1A	3/4"	6#14, 1#14G	CONTROL TB @ MOTOR	PUSHBUTTON STATION	
2AFDC1B	3/4"	12#14, 1#14G	CONTROL TB @ MOTOR	VIBRATION MONITORING PNL VMP	
2AFDC1C	–	CABLES BY MANUFACTURER	VMP	JB @ PUMP/MOTOR	
2AFDC1D	–	CABLES BY MANUFACTURER	JB @ PUMP/MOTOR	MOTOR VIBRATION SENSOR	
2AFDC1E	–	CABLES BY MANUFACTURER	JB @ PUMP/MOTOR	PUMP VIBRATION SENSOR	
2AFDC1F	3/4"	4#14, 1#14G	CONTROL TB @ MOTOR	JB @ MOTOR	
2AFDC1G	3/4"	2#14, 1#14G	JB @ MOTOR	MOTOR SPACE HEATER	
2AFDC1H	3/4"	2#14, 1#14G	JB @ MOTOR	MOTOR TEMP SWITCH	
2AFDC1J	3/4"	10#14, 1#14G	CONTROL TB @ MOTOR	DISCH. VALVE DV-2	
2AFDC1K	3/4"	4#14, 1#14G	CONTROL TB @ MOTOR	SUNCTION VALVE PSV-2	
2AFDC1L	3/4"	4#14, 1#14G	AFD-P2	VENT FAN/DAMPER CIRCUIT	
2AFDN1	1"	2-2/C#16SH	AFD-P2	VMP	
2AFDC2	1 1/4"	28#14 (6 SPARE), 1#14G	AFD-P2	CP-Y02	
2AFDN2	1"	4-2/C#16SH	AFD-P2	CP-Y02	
		ADJUSTABLE FREQUENCY DRIVE AFD-P3			
3AFDP1A	3 1/2"	3-500KCM, 1#1/0G	AFD-P3	SEWAGE PUMP P3	
3AFDP1B	3 1/2"	3-500KCM, 1#1/0G	AFD-P3	SEWAGE PUMP P3	
3AFDC1	1 1/2"	42#14 (4 SPARE), 1#14G	AFD-P3	CONTROL TB @ MOTOR	COIL SPARES
3AFDC1A	3/4"	6#14, 1#14G	CONTROL TB @ MOTOR	PUSHBUTTON STATION	
3AFDC1B	3/4"	12#14, 1#14G	CONTROL TB @ MOTOR	VIBRATION MONITORING PNL VMP	
3AFDC1C	–	CABLES BY MANUFACTURER	VMP	JB @ PUMP/MOTOR	CONDUIT AS REQUIRED
3AFDC1D	–	CABLES BY MANUFACTURER	JB @ PUMP/MOTOR	MOTOR VIBRATION SENSOR	CONDUIT AS REQUIRED
3AFDC1E	–	CABLES BY MANUFACTURER	JB @ PUMP/MOTOR	PUMP VIBRATION SENSOR	CONDUIT AS REQUIRED
3AFDC1F	3/4"	4#14, 1#14G	CONTROL TB @ MOTOR	JB @ MOTOR	
3AFDC1G	3/4"	2#14, 1#14G	JB @ MOTOR	MOTOR SPACE HEATER	
3AFDC1H	3/4"	2#14, 1#14G	JB @ MOTOR	MOTOR TEMP SWITCH	
3AFDC1J	3/4"	10#14, 1#14G	CONTROL TB @ MOTOR	DISCH. VALVE DV-3	
3AFDC1K	3/4"	4#14, 1#14G	CONTROL TB @ MOTOR	SUNCTION VALVE PSV-3	
3AFDC1L	3/4"	4#14, 1#14G	AFD-P3	VENT FAN/DAMPER CIRCUIT	
3AFDN1	1"	2-2/C#16SH	AFD-P3	VMP	
3AFDC2	1 1/4"	28#14 (6 SPARE), 1#14G	AFD-P3	CP-Y02	
3AFDN2	1"	4-2/C#16SH	AFD-P3	CP-Y02	
		ADJUSTABLE FREQUENCY DRIVE AFD-P4			
4AFDP1A	3 1/2"	3-500KCM, 1#1/0G	AFD-P4	SEWAGE PUMP P4	
4AFDP1B	3 1/2"	3-500KCM, 1#1/0G	AFD-P4	SEWAGE PUMP P4	
4AFDC1	1 1/2"	42#14 (4 SPARE), 1#14G	AFD-P4	CONTROL TB @ MOTOR	COIL SPARES
4AFDC1A	3/4"	6#14, 1#14G	CONTROL TB @ MOTOR	PUSHBUTTON STATION	
4AFDC1B	3/4"	12#14, 1#14G	CONTROL TB @ MOTOR	VIBRATION MONITORING PNL VMP	
4AFDC1C	–	CABLES BY MANUFACTURER	VMP	JB @ PUMP/MOTOR	CONDUIT AS REQUIRED
4AFDC1D	–	CABLES BY MANUFACTURER	JB @ PUMP/MOTOR	MOTOR VIBRATION SENSOR	CONDUIT AS REQUIRED
4AFDC1E	–	CABLES BY MANUFACTURER	JB @ PUMP/MOTOR	PUMP VIBRATION SENSOR	CONDUIT AS REQUIRED
4AFDC1F	3/4"	4#14, 1#14G	CONTROL TB @ MOTOR	JB @ MOTOR	
4AFDC1G	3/4"	2#14, 1#14G	JB @ MOTOR	MOTOR SPACE HEATER	
4AFDC1H	3/4"	2#14, 1#14G	JB @ MOTOR	MOTOR TEMP SWITCH	
4AFDC1J	3/4"	10#14, 1#14G	CONTROL TB @ MOTOR	DISCH. VALVE DV-4	
4AFDC1K	3/4"	4#14, 1#14G	CONTROL TB @ MOTOR	SUNCTION VALVE PSV-4	
4AFDC1L	3/4'	4#14, 1#14G	AFD-P4	VENT FAN/DAMPER CIRCUIT	
4AFDN1	1"	2-2/C#16SH	AFD-P4	VMP	
4AFDC2	1 1/4"	28#14 (6 SPARE), 1#14G	AFD-P4	CP-Y02	
4AFDN2	1"	4-2/C#16SH	AFD-P4	CP-Y02	
		480V MOTOR CONTROL CENTER			
1M1	1"	3#8, 1#10G	MCC-1	BRIDGE CRANE BC-1 J	VIA DISC. SW.
1M2	3/4"	3#10, 1#12G	MCC-1	PORTABLE PUMP RECEPT.	VIA DISC. SW.
1M3	3/4"	3#12, 1#12G	MCC-1	SUCTION VALVE PSV-1	VIA DISC. SW.
1M3A	3/4"	4#14, 1#14G	SUCTION VALVE PSV-1	CP-Y02	
1M4	3/4"	3#12, 1#12G	MCC-1	SUCTION VALVE PSV-3	VIA DISC. SW.
1M4A	3/4"	4#14, 1#14G	SUCTION VALVE PSV-3	PCP	
1M5	3/4"	3#10, 6#14, 1#10G	MCC-1	JB @ AIR COMPRESSOR AC-1	
1M5A	3/4"	3#10, 1#10G	JB @ AIR COMPRESSOR AC-1	AIR COMPRESSOR AC-1	VIA DISC. SW.
1M5B	3/4"	6#14, 1#14G	JB @ AIR COMPRESSOR AC-1	PUSHBUTTON STATION AND COMPRESSOR PROTECTION	
1M5C1	3/4"	12#14, 1#14G	MCC-1	PRESSURE SWITCHES	
1M6	3/4"	3#10, 6#14, 1#10G	MCC-1	JB @ AIR COMPRES. AC-2	
1M6A	3/4"	3#10, 1#10G	JB @ AIR COMPRESSOR AC-2	AIR COMPRESSOR AC-2	VIA DISC. SW.
1M6B	3/4"	6#14, 1#14G	JB @ AIR COMPRESSOR AC-2	PUSHBUTTON STATION AND COMPRESSOR PROTECTION	
1M7	3/4"	3#12, 2#14, 1#12G	MCC-1	JB @ EXH. FAN REF-1	
1M7A	3/4"	3#12, 1#12G	JB @ EXHAUST FAN REF-1	EXHAUST FAN REF-1	VIA DISC. SW.
1M7B	3/4"	2#14, 1#14G	JB @ EXHAUST FAN REF-1	PUSHBUTTON STATION	
1M8	3/4"	3#12, 2#14, 1#12G	MCC-1	JB @ EXH. FAN REF-3	
1M8A	3/4"	3#12, 1#12G	JB @ EXHAUST FAN REF-3	EXHAUST FAN REF-3	VIA DISC. SW.
1M8B	3/4"	2#14, 1#14G	JB @ EXHAUST FAN REF-3	PUSHBUTTON STATION	
1M9	3/4"	3#12, 2#14, 1#12G	MCC-1	JB @ EXH. FAN REF-5	
1M9A	3/4"	3#12, 1#12G	JB @ EXHAUST FAN REF-5	EXHAUST FAN REF-5	VIA DISC. SW.

GREELEY AND HANSEN
1715 N. WESTSHORE BLVD., STE. 464
TAMPA, FLORIDA 33607
CERTIFICATE OF AUTHORIZATION NO. 37

NO SCALE

DESIGNED RZ
DRAWN OC
CHECKED DD

NO.	DATE	APPD	REVISION

P.E. NAME: NORBERT VIRANYI P.E. NO. 72587

P.E. NAME:
DATE:

CITY OF TAMPA WASTEWATER DEPARTMENT
YBOR PUMPING STATION REHABILITATION

ELECTRICAL

SCHEDULES

FILE: YBOREE17

NO. E17

DATE JUNE 2011

FILE: YBOREE17 1:1 06/21/11 08:30 GH-A

CONDUIT NUMBER	CONDUIT SIZE	CONDUCTOR QUANTITY & SIZE	FROM	TO	REMARKS
1M9B	3/4"	2#14, 1#14G	JB @ EXHAUST FAN REF-5	PUSHBUTTONSTATION	
1M10	3/4"	3#12, 2#14, 1#12G	MCC-1	JB @ SUPPLY FAN S-1	
1M10A	3/4"	3#12, 1#12G	JB @ SUPPLY FAN S-1	SUPPLY FAN S-1	VIA DISC. SW.
1M10B	3/4"	2#14, 1#14G	JB @ SUPPLY FAN S-1	PUSHBUTTON STATION	
1M11	3/4"	3#12, 2#14, 1#12G	MCC-1	JB @ SUPPLY FAN S-3	
1M11A	3/4"	3#12, 1#12G	JB @ SUPPLY FAN S-3	SUPPLY FAN S-3	VIA DISC. SW.
1M11B	3/4"	2#14, 1#14G	JB @ SUPPLY FAN S-3	PUSHBUTTON STATION	
1M12	3/4"	3#12, 2#14, 1#12G	MCC-1	JB @ EXH. FAN REF-2	
1M12A	3/4"	3#12, 1#12G	JB @ EXHAUST FAN REF-2	EXHAUST FAN REF-2	VIA DISC. SW.
1M12B	3/4"	2#14, 1#14G	JB @ EXHAUST FAN REF-2	PUSHBUTTON STATION	
1M13	3/4"	3#12, 2#14, 1#12G	MCC-1	JB @ EXH. FAN REF-6	
1M13A	3/4"	3#12, 1#12G	JB @ EXHAUST FAN REF-6	EXHAUST FAN REF-6	VIA DISC. SW.
1M13B	3/4"	2#14, 1#14G	JB @ EXHAUST FAN REF-6	PUSHBUTTON STATION	
1M14	3/4"	3#12, 2#14, 1#12G	MCC-1	JB @ SUPPLY FAN S-2	
1M14A	3/4"	3#12, 1#12G	JB @ SUPPLY FAN S-2	SUPPLY FAN S-2	VIA DISC. SW.
1M14B	3/4"	2#14, 1#14G	JB @ SUPPLY FAN S-2	PUSHBUTTON STATION	
1M15	3/4"	3#12, 2#14, 1#12G	MCC-1	JB @ SUMP PUMP SP-1	
1M15A	3/4"	3#12, 1#12G	JB @ SUMP PUMP SP-1	SP-1 DISC. SW.	
1M15B	1"	CABLE BY MANUFACTURER	SP-1 DISC. SW.	SUMP PUMP SP-1	
1M15C	3/4"	3#14, 1#14G	JB @ SUMP PUMP SP-1	SELECTOR SWITCH	
1M15D	1"	CABLE BY MANUFACTURER	JB @ SUMP PUMP SP-1	FLOAT SWITCHES F1, F2	
1M16	1 1/4"	3#6, 1#10G	MCC-1	TRANSFORMER LT1	
1M16A	2"	4#2, 1#8G	TRANSFORMER LT1	LTG. PANEL LP1	
1M17	3/4"	3#12, 1#12G	MCC-1	SUCTION VALVE PSV-2	VIA DISC. SW.
1M17A	3/4"	4#14, 1#14G	SUCTION VALVE PSV-2	PCP	
1M18	3/4"	3#12, 1#12G	MCC-1	SUCTION VALVE PSV-4	VIA DISC. SW.
1M18A	3/4"	4#14, 1#14G	SUCTION VALVE PSV-4	PCP	
1M19	2"	MATCH EXISTING LOAD REQ.	MCC-1	ODOR CONTROL OC-1	
1M20	1"	16#14 (6 SPARE), 1#14G	MCC-1	TEMP CONTROL PANEL TCP	
1M21	3/4"	10#14 (4 SPARE), 1#14G	MCC-1	TEMP CONTROL PANEL TCP	
1M22	3/4"	10#14 (6 SPARE), 1#14G	MCC-1	CP-Y02	
1M23	1 1/4"	3#6, 1#10G	MCC-1	AUTO TRANSFER SWITCH (ATS)	
1M24	3/4"	3#10, 6#14, 1#10G	MCC-1	JB @ AIR COMPRES. AC-3	
1M24A	3/4"	3#10, 1#10G	JB @ AIR COMPRESSOR AC-3	AIR COMPRESSOR AC-3	VIA DISC. SW.
1M24B	3/4"	6#14, 1#14G	JB @ AIR COMPRESSOR AC-3	PUSHBUTTON STATION AND COMPRESSOR PROTECTION	VIA DISC. SW
			CONTROL CIRCUITS		
C1A	1 1/2"	38#14 (6 SPARE), 1#14G	SWITCHGEAR SES-1	RBCP	43CS, M-T-M BRKR CS
C1B	1"	20#14, 1#14G	SWITCHGEAR SES-1	RBCP	BUS "A" FDR BRKR CS
C1C	1"	20#14, 1#14G	SWITCHGEAR SES-1	RBCP	BUS "B" FDR BRKR CS
			INSTRUMENTATION CIRCUITS		
N1	1"	CAT 5 STP CABLE	CP-Y01	CP-Y02	
N2	1"	CAT 5 STP CABLE	CP-Y01	480V SWGR SES-1 ATS PLC	
N3	1"	3-2/C#16SH	CP-Y02	BUBBLER BP-Y01	
N4	–	EXISTING CABLE	CP-Y01 (BRITEHOUSE ROUTER)	HF CURREN WWTP SCADA	EX CABLE TO PUMP STATION EXTEND AND RECONNECT AS REQUIRED TO NEW CP-Y01
N5	1"	CABLE BY MANUFACTURER	FIT-10	FE-10	
N5A	3/4"	1-2/C#16SH	FIT-10	CP-Y02	
N6	1"	SEE REMARKS	CABLE COMPANY MODEM	CABLE COMPANY POLE	COORDINATE CABLE REQUIREMENTS WITH CABLE COMPANY

GREELEY AND HANSEN
1715 N. WESTSHORE BLVD., STE. 464
TAMPA, FLORIDA 33607
CERTIFICATE OF AUTHORIZATION NO. 37

0 4 8 16
SCALE IN FEET

DESIGNED RZ
DRAWN OC
CHECKED DD

NO.	DATE	APPD	REVISION

P.E. NAME: NORBERT VIRANYI P.E. NO. 72587
P.E. NAME:
DATE:

CITY OF TAMPA WASTEWATER DEPARTMENT
YBOR PUMPING STATION REHABILITATION

ELECTRICAL

SCHEDULES

FILE: YBOREE18

NO. E18

DATE JUNE 2011

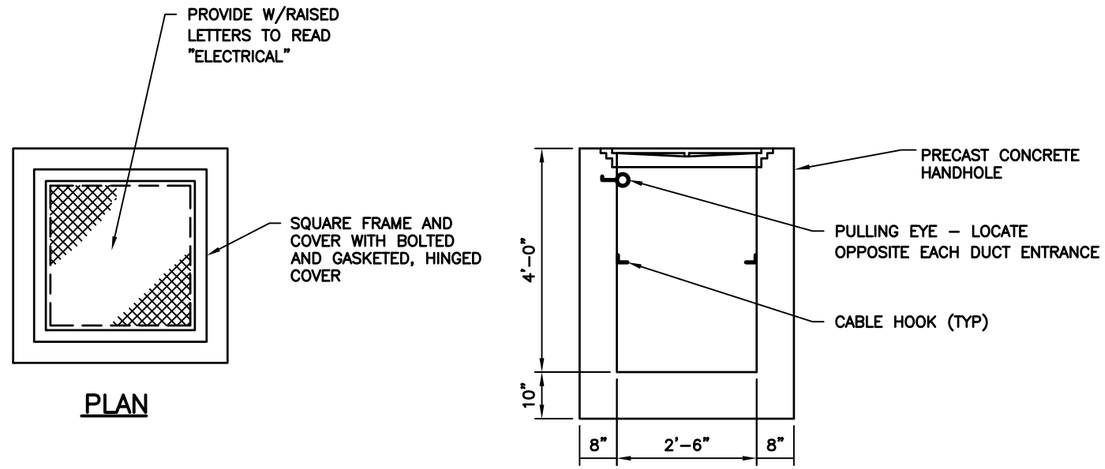

PLAN

ELEVATION

TYPICAL ELECTRICAL HANDHOLE

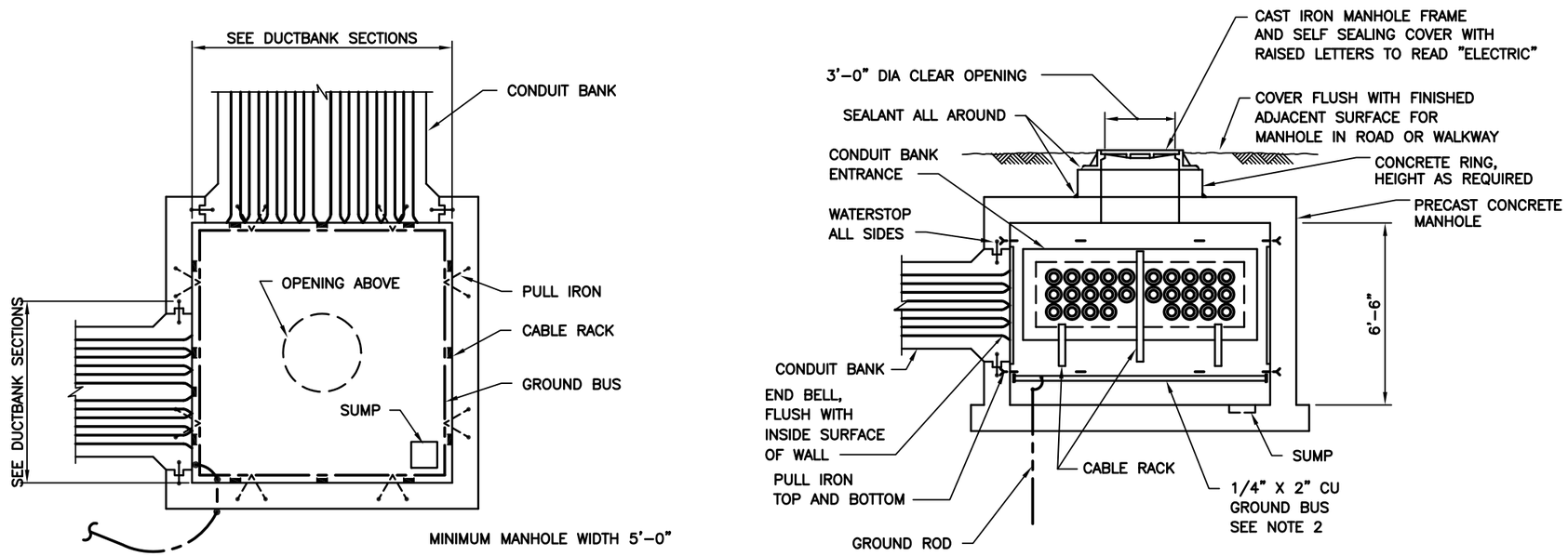

SECTIONAL PLAN

ELEVATION

TYPICAL ELECTRICAL MANHOLE

NOT TO SCALE

FILE: YBOREE19 1:1 06/21/11 09:32 GH–A

GREELEY AND HANSEN 1715 N. WESTSHORE BLVD., STE. 464 TAMPA, FLORIDA 33607 CERTIFICATE OF AUTHORIZATION NO. 37	NOT TO SCALE	NO. / DATE / APPD / REVISION	CITY OF TAMPA WASTEWATER DEPARTMENT YBOR PUMPING STATION REHABILITATION	FILE: YBOREE19
	DESIGNED RZ DRAWN TT CHECKED DD	P.E. NAME: NORBERT VIRANYI P.E. NO. 72587 P.E. NAME: DATE:	ELECTRICAL DETAILS	NO. E19 DATE JUNE 2011

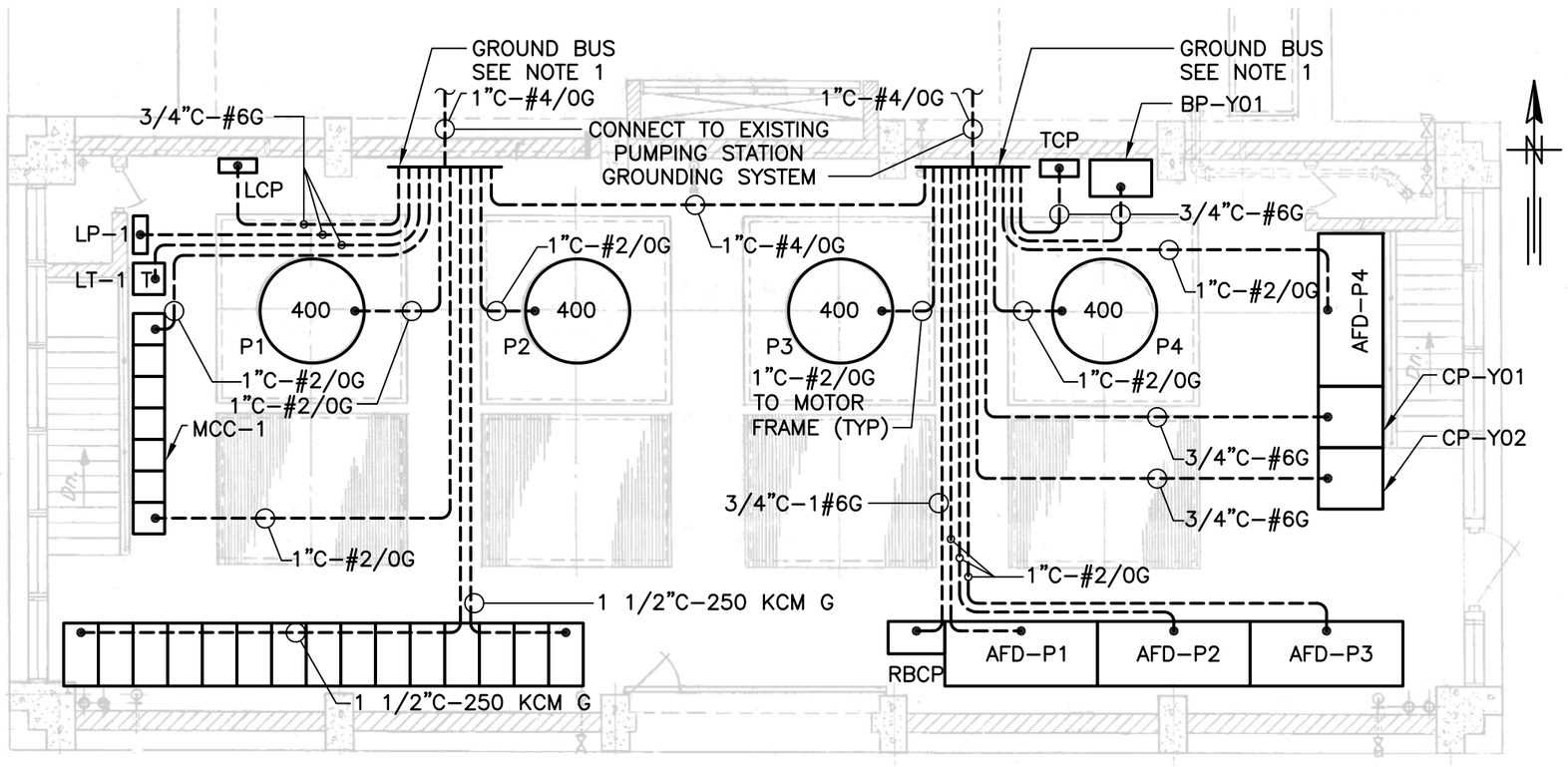

GROUNDING PLAN – FL EL 12.00'

SCALE: 1/8" = 1'-0"

NOTES:

1. PROVIDE A 4"W X 36"L X 1/4" THICK BARE COPPER GROUND BUS WITH STAND OFF INSULATORS. TERMINATE ALL GROUND CABLES USING TWO HOLE BOLTED LUG CONNECTORS.
2. FOR GROUNDING REQUIREMENTS NOT SHOWN ON THIS DRAWING SEE CONDUIT AND CABLE SCHEDULES. WHERE NOT NOTED OR OTHERWISE IDENTIFIED, PROVIDE A MINIMUM OF 3/4" CONDUIT AND #6 BARE COPPER GROUND WIRE.
3. ROUTE ALL CONDUITS SHOWN BELOW FLOOR ELEVATION 12.00'
4. PROVIDE GROUNDING BUSHINGS AT BOTH ENDS OF ALL GROUNDING CONDUITS.

GREELEY AND HANSEN
1715 N. WESTSHORE BLVD., STE. 464
TAMPA, FLORIDA 33607
CERTIFICATE OF AUTHORIZATION NO. 37

0 4 8 16
SCALE IN FEET

DESIGNED RZ
DRAWN OC
CHECKED DD

NO.	DATE	APPD	REVISION

P.E. NAME: NORBERT VIRANYI P.E. NO. 72587
P.E. NAME:
DATE:

CITY OF TAMPA WASTEWATER DEPARTMENT
YBOR PUMPING STATION REHABILITATION

ELECTRICAL

GROUNDING PLAN

FILE: YBOREE20

NO. E20

DATE JUNE 2011

FILE: YBOREE20 1:1 06/21/11 09:33 GH-A

INSTRUMENT TAGGING AND LABELING

INSTRUMENT TAG: 1000–FIT–1501A

- SITE IDENTIFIER
- LOOP NUMBER
- DEVICE NUMBER
- SUFFIX (IF NEEDED)
- FIRST LETTER
- SUCCEEDING LETTERS

SITE IDENTIFIER

1000 DIGESTION FACILITIES

1000 IS THE DESIGNATED PREFIX FOR ALL INSTRUMENT LOOPS AND EQUIPMENT TAGS ON THESE DRAWINGS

PSL XXXX — INSTRUMENT – FIELD MOUNTED

HMS XXXX — INSTRUMENT – PANEL MOUNTED

FR XX / AR XX — SINGLE INSTRUMENT HOUSING CONTAINING TWO (OR MORE) INSTRUMENT FUNCTIONS (CIRCLES TOUCHING)

FY XXXX X — INSTRUMENT RELAY MOUNTED IN REAR OF PANEL (BROKEN LINE). ACTIVATES AND DEACTIVATES CONTROL AND/OR ALARM SWITCHES AT PRESET SIGNAL VALUES. SEE BELOW FOR FUNCTIONS (X).

Δ	DIFFERENCE
>	HIGH SELECTOR
<	LOW SELECTOR
S/I	FREQUENCY/CURRENT CONVERTER
I/I	CURRENT/CURRENT REPEATER (ISOLATOR)
Σ	SUMMATION
AV	AVERAGE
%	RATIO

PSL XXXX Z — ANALYSIS INSTRUMENT SEE BELOW FOR FUNCTIONS (Z)

- CH_4–METHANE
- Cl_2–SODIUM HYPOCHLORITE
- COMB–COMBUSTIBLES
- DO–DISSOLVED OXYGEN
- $FeCl_3$–FERRIC CHLORIDE
- F –FLUORIDE
- H_2S–HYDROGEN SULFIDE
- H_3PO_4 –PHOSPHORIC ACID
- H_2SO_4 –SULFURIC ACID
- $Na_2S_2O_5$–SODIUM METHA–BISULFITE
- NH_3 –AMMONIA
- O_2 –OXYGEN
- ORP –OXYDATION REDUCTION POTENTIAL
- pH–HYDROGEN ION CONCENTRATION $(-LOG\ )_{10}$
- PO_4 –PHOSPHATE

EI — INTERLOCK
1 = INTERLOCK DESCRIPTION

YL XX — INDICATING LIGHT UNIT

PAH XX — ALARM LIGHT OR ANNUNCIATOR

HMS XX — PUSHBUTTON

HC XX — HAND CONTROL

HS XX XXX — HAND (MANUAL) SELECTOR SWITCH.

FUNCTION LEGEND FOR HAND SWITCH AND PUSHBUTTON CONTROLS

ACK	ACKNOWLEDGE
AM	AUTO–MANUAL
CO	CLOSE–OPEN
COA	CLOSE–OPEN–AUTO
ES	EMERGENCY STOP
FR	FORWARD–REVERSE
FOR	FORWARD–OFF–REVERSE
HOA	HAND–OFF–AUTO
HOC	HAND–OFF–COMPUTER
LA	LOCAL–AUTO
LOC	LOCAL–OFF–COMPUTER
LOR	LOCAL–OFF–REMOTE
LOS	STOP WITH LOCKOUT
LR	LOCAL–REMOTE
MOA	MANUAL–OFF–AUTO
OOA	ON–OFF–AUTO
O/O	ON–OFF
OSC	OPEN–STOP–CLOSE
POT	SPEED POTENTIOMETER
PTT	PUSH–TO–TEST
RS	RESET
ROL	RAISE–OFF–LOWER
R/O	RUN–OFF
S/R/S	START–RUN–STOP
SS	START–STOP
SS/L	START– STOP WITH LOCKOUT
1–2	SELECT DEVICE 1 OR 2
SIL	SILENCE

CONTROL SYSTEM INPUTS AND OUTPUTS

- DISCRETE INPUT
- DISCRETE OUTPUT
- ANALOG INPUT
- ANALOG OUTPUT

INSTRUMENT IDENTIFICATION LETTERS

ISA S5.1 MODIFIED

	FIRST LETTER		SUCCEEDING LETTERS		
	MEASURED OR INITIATING VARIABLE	MODIFIER	READOUT OR PASSIVE FUNCTION	OUTPUT FUNCTION	MODIFIER
A	ANALYSIS,		ALARM		
B	BURNER FLAME			CLOSE, STOP, DECREASE	OFF
C	CONDUCTIVITY (ELECTRICAL)	COMPUTER		CONTROL	
D	DENSITY (MASS) OR SPECIFIC GRAVITY	DIFFERENTIAL		OPEN, START, INCREASE	
E	VOLTAGE (EMF)		PRIMARY ELEMENT		
F	FLOW RATE	RATIO (FRACTION)		FORWARD	FAIL
G	MOISTURE		GAUGE, GLASS, GATE		
H	HAND (MANUALLY INITIATED)				HIGH, OPEN
I	CURRENT (ELECTRICAL)		INDICATE		
J	POWER	SCAN			
K	TIME OR TIME SCHEDULE	TIME RATE OF CHANGE		CONTROL STATION	
L	LEVEL		LIGHT		LOW, CLOSED
M	MOISTURE, MOTOR	MANUAL	MOMENTARY	MOTOR	MIDDLE OR INTERMEDIATE
N	INTRUSION				ON, OPERATE, RUNNING
O			ORIFICE (RESTRICTION)		OVERLOAD
P	PRESSURE OR VACUUM		POINT (TEST CONNECTION)	PUMP	
Q	QUANTITY	INTEGRATE OR TOTALIZE			
R	RADIOACTIVITY		RECORD	REVERSE	
S	SPEED, FREQUENCY, MOTION	SAFETY		SWITCH	STOP
T	TEMPERATURE			TRANSMIT	
U	MULTIVARIABLE		MULTIFUNCTION	MULTIFUNCTION	MULTIFUNCTION
V	VIBRATION, VALVE			VALVE, DAMPER OR LOUVER	
W	WEIGHT, FORCE, TORQUE		WELL		
X	UNCLASSIFIED	X AXIS	UNCLASSIFIED	UNCLASSIFIED	UNCLASSIFIED
Y	EVENT, STATE, PRESENCE	Y AXIS		RELAY OR COMPUTE	
Z	POSITION, DIMENSION	Z AXIS		DRIVE, ACTUATE OR UNCLASSIFIED FINAL CONTROL ELEMENT	

MISC INSTRUMENT SYMBOLS

- STROBE LIGHT/ROTATING BEACON — A = AMBER, R = RED, W = WHITE, G = GREEN
- ALARM HORN
- MAGNETIC FLOW METER
- ULTRASONIC (DOPPLER) FLOW METER
- VENTURI METER
- FLUME
- VORTEX SHEDDING FLOW METER
- PD TYPE FLOW METER
- STANDARD OFF–LINE DIAPHRAGM SEAL
- ANNULAR TYPE DIAPHRAGM SEAL
- ULTRASONIC LEVEL ELEMENT
- FLOAT SWITCH
- RADAR LEVEL ELEMENT

VALVE SYMBOLS

- DIAPHRAGM VALVE (N.O.)
- DIAPHRAGM VALVE (N.C.)
- GATE VALVE
- KNIFE GATE VALVE
- GLOBE VALVE
- PLUG VALVE
- BUTTERFLY VALVE (N.O.)
- BUTTERFLY VALVE (N.C.)
- BALL VALVE (N.O.)
- BALL VALVE (N.C.)
- CHECK VALVE
- PINCH VALVE
- HOSE/COUPLING CONNECTION
- 3–WAY VALVE
- RELIEF VALVE
- PRESSURE REGULATING VALVE
- BACKPRESSURE REGULATING VALVE
- SOLENOID VALVE
- 4–WAY SOL VALVE

LINE SYMBOLS

- MAIN PROCESS LINE
- AUXILIARY SYSTEMS
- ELECTRIC (ELECTRONIC) SIGNAL
- TWO–WIRE VALVE ACTUATOR LINK
- DATA LINK
- PNEUMATIC SIGNAL
- CAPILLARY LINE
- HYDRAULIC SIGNAL
- HEAT TRACED AND INSULATED
- AIR PURGE SET
- AS — AIR SUPPLY
- ES — ELECTRICAL SUPPLY, ES = VOLTAGE
- PROCESS FLOW LINE CONTINUED TO/FROM ANOTHER DRAWING.
- PROCESS SIGNAL LINE CONTINUED TO/FROM ANOTHER DRAWING.
  - * = DRAWING REFERENCE
  - N = INTERFACE ID
- PROCESS FLOW LINE CONTINUED OUTSIDE SCOPE OF DRAWINGS
- AUXILIARY SYSTEM FLOW

PROCESS AND EQUIPMENT SYMBOLS

- PULSATION DAMPENER OR ACCUMULATOR
- DAMPER
- ELECTRIC MOTOR ACTUATOR
- ELECTRIC MOTOR ACTUATOR WITH FLOOR–STAND
- DIAPHRAGM ACTUATOR
- CYLINDER ACTUATOR — XX: FO FAIL OPEN; FC FAIL CLOSED; FLP FAIL LAST POSITION
  - NOTE: PILOT SOLENOID VALVE FOR CYLINDER ACTUATOR NOT SHOWN UNLESS NEEDED FOR CLARITY
- SOLENOID ACTUATOR
- ROTAMETER (FLOW INDICATOR)
- CALIBRATION COLUMN
- ELECTRIC MIXER
- SLUICE GATE OR SLIDE GATE — SG = SLUICE GATE, SLG = SLIDE GATE
- CENTRIFUGAL PUMP — VS = VARIABLE SPEED
- CENTRIFUGAL TYPE FAN/COMPRESSOR/ BLOWER
- PD BLOWER/COMPRESSOR (ROTARY)
- PD BLOWER/COMPRESSOR (RECIPROCATING)
- PROGRESSIVE CAVITY PUMP
- CHEMICAL METERING PUMP
- SUBMERSIBLE PUMP — VS = VARIABLE SPEED
- SCREW PUMP
- DRAIN

GREELEY AND HANSEN
1715 N. WESTSHORE BLVD., STE. 464
TAMPA, FLORIDA 33607
CERTIFICATE OF AUTHORIZATION NO. 37

NO SCALE

NO.	DATE	APPD	REVISION

DESIGNED TRG
DRAWN TRG
CHECKED DCH

P.E. NAME: NORBERT VIRANYI P.E. NO. 72587
P.E. NAME:
DATE:

CITY OF TAMPA WASTEWATER DEPARTMENT
YBOR PUMPING STATION REHABILITATION

INSTRUMENTATION AND CONTROL

LEGEND AND SYMBOLS

FILE: YBOREI01
NO. 11
DATE JUNE 2011

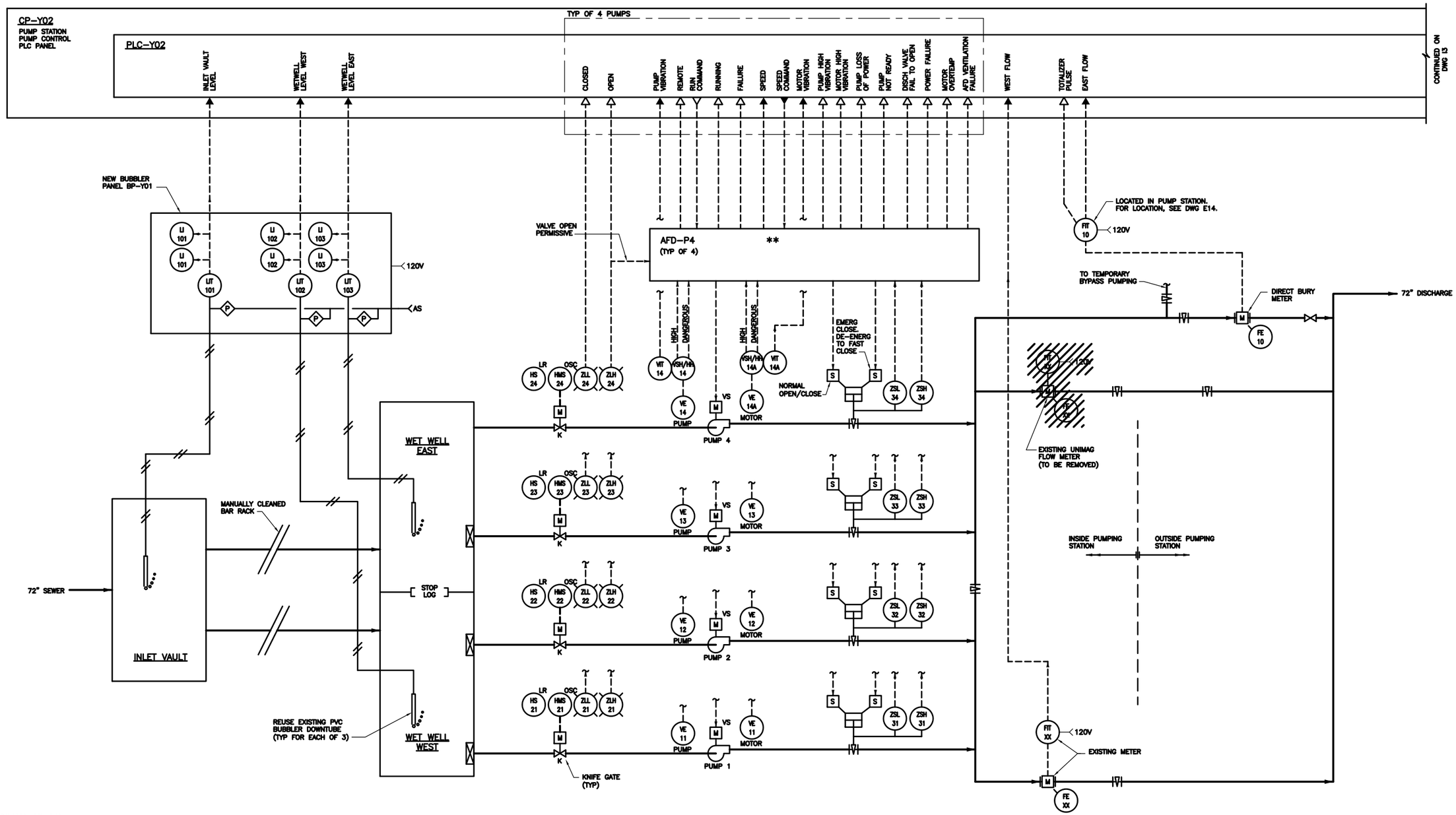

GENERAL NOTES:

COMPONENTS AND PANELS SHOWN WITH A SINGLE ASTERISK (*) ARE TO BE PROVIDED AS PART OF A PACKAGE SYSTEM.

COMPONENTS AND PANELS SHOWN WITH A DOUBLE ASTERISK (**) ARE TO BE PROVIDED UNDER DIVISION 18 ELECTRICAL.

GREELEY AND HANSEN 1715 N. WESTSHORE BLVD., STE. 464 TAMPA, FLORIDA 33607 CERTIFICATE OF AUTHORIZATION NO. 37	NO SCALE DESIGNED TRG DRAWN TRG CHECKED DCH	NO. DATE APPD REVISION P.E. NAME: NORBERT VIRANYI P.E. NO. 72587 P.E. NAME: DATE:	CITY OF TAMPA WASTEWATER DEPARTMENT YBOR PUMPING STATION REHABILITATION INSTRUMENTATION AND CONTROL P&ID

FILE: YBOREI02

NO. 12

DATE JUNE 2011

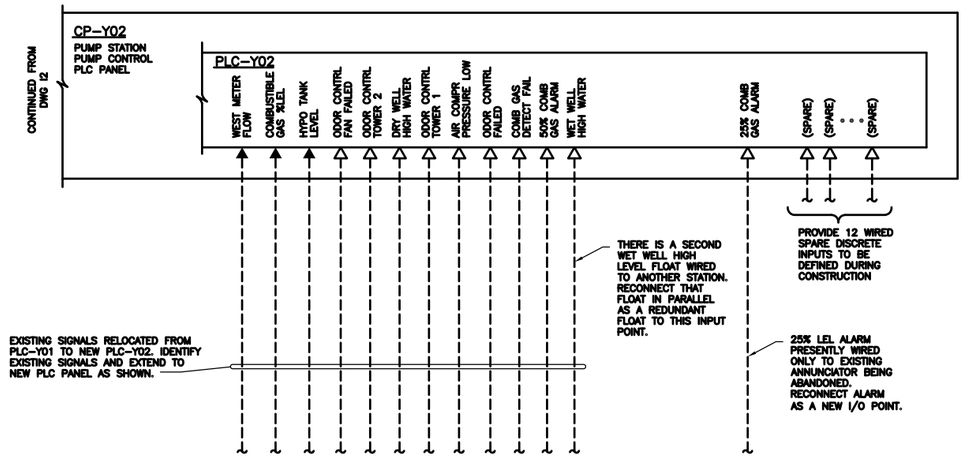

RELOCATED I/O SIGNALS

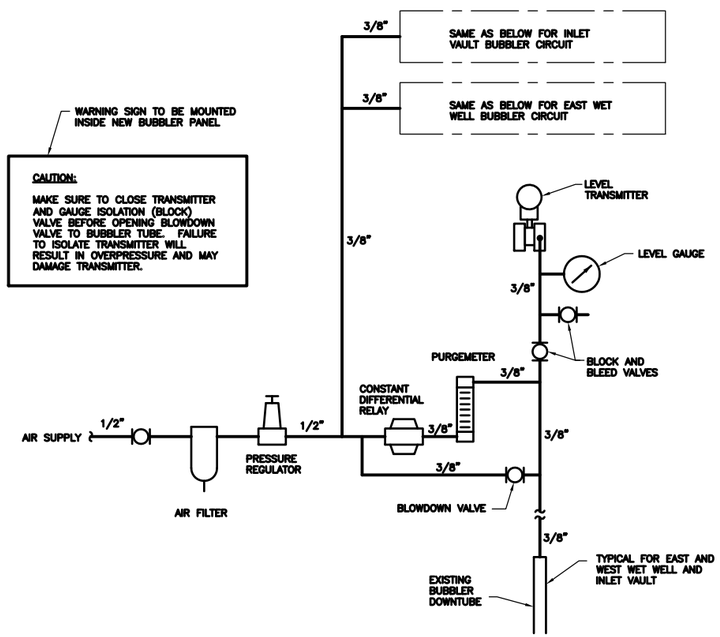

BUBBLER DETAIL

WEST WET WELL SHOWN, OTHERS SIMILAR

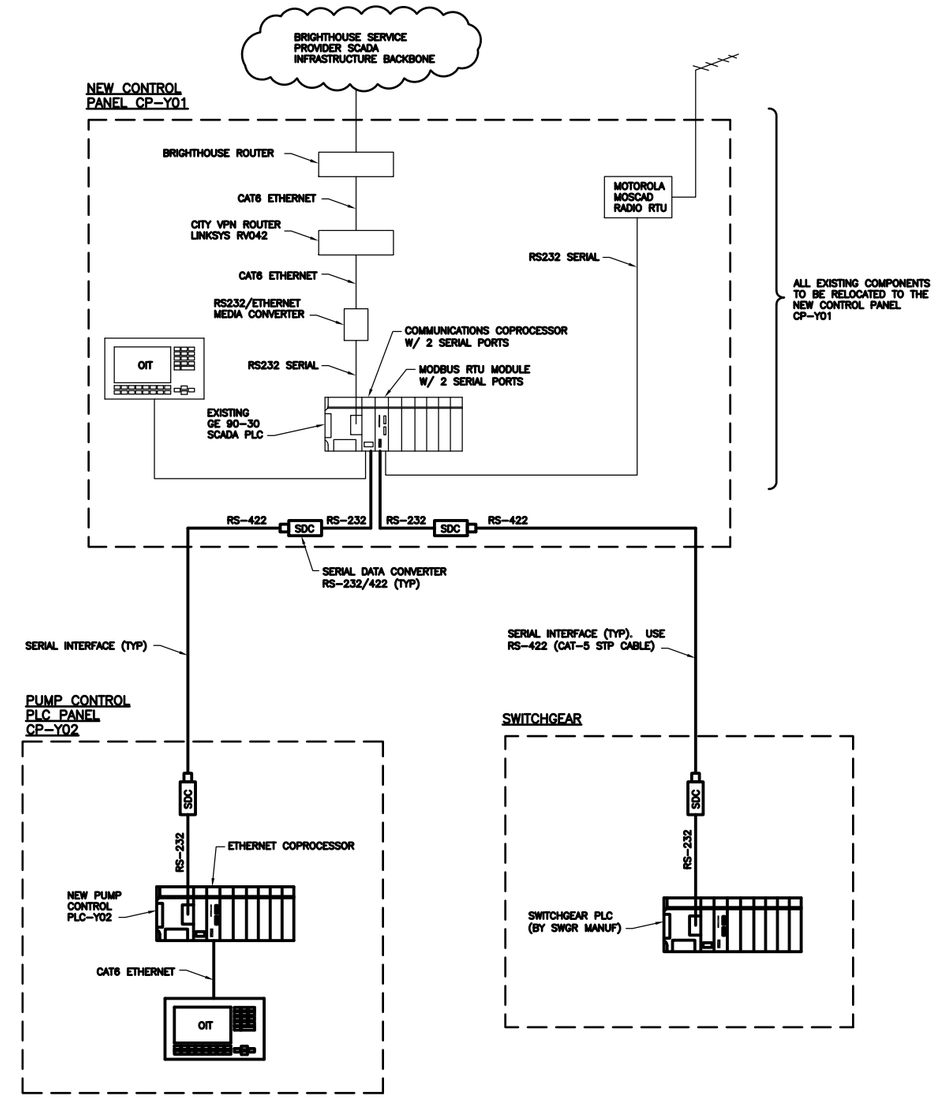

SCADA DIAGRAM

GREELEY AND HANSEN
1715 N. WESTSHORE BLVD., STE. 464
TAMPA, FLORIDA 33607
CERTIFICATE OF AUTHORIZATION NO. 37

NO SCALE

DESIGNED	TRG
DRAWN	TRG
CHECKED	DCH

NO.	DATE	APPD	REVISION

P.E. NAME: NORBERT VIRANYI P.E. NO. 72587

P.E. NAME:

DATE:

CITY OF TAMPA WASTEWATER DEPARTMENT
YBOR PUMPING STATION REHABILITATION

INSTRUMENTATION AND CONTROL

P&ID AND MISC DETAILS

FILE: YBOREI03

NO. 13

DATE JUNE 2011

ITEM	DESCRIPTION	LEGEND	COMMENT
1	NAMEPLATE	BUBBLER PANEL BP-Y01	
2	NAMEPLATE	INLET VAULT LEVEL	
3	NAMEPLATE	WEST WET WELL LEVEL	
4	NAMEPLATE	EAST WET WELL LEVEL	
5	BARGRAPH INDICATOR	--	TYP OF 3
6	DIGITAL INDICATOR	--	TYP OF 3

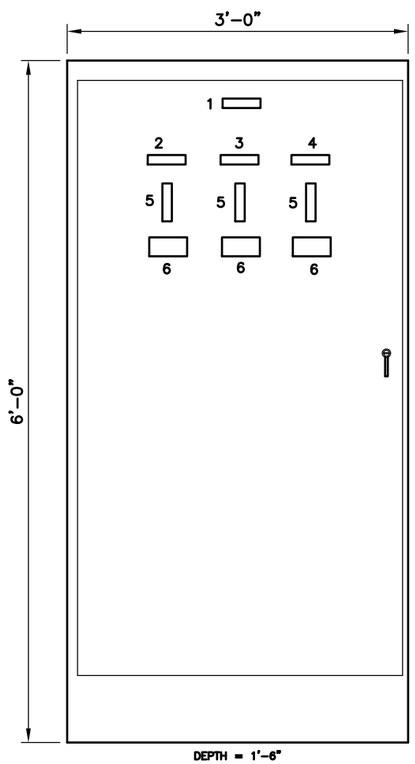

BUBBLER PANEL BP-Y01
NOT TO SCALE

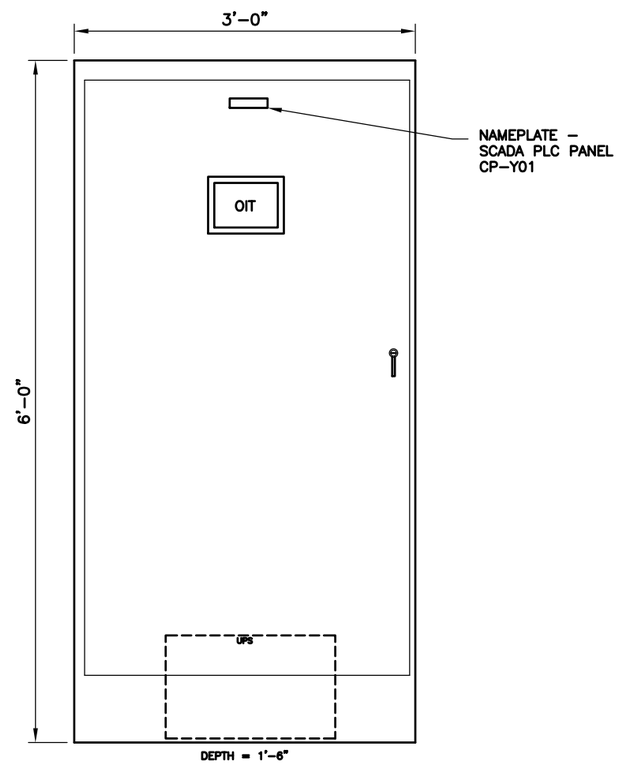

SCADA PLC PANEL CP-Y01
NOT TO SCALE

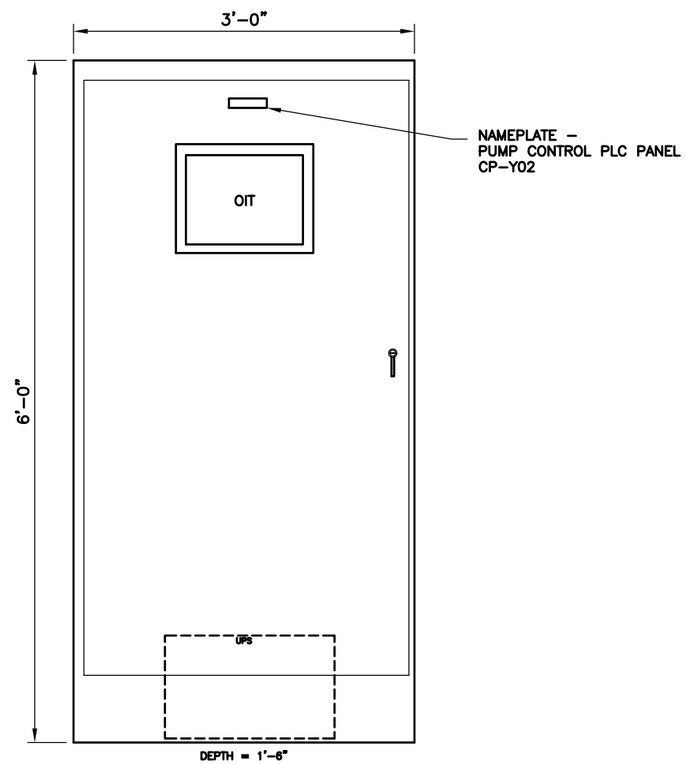

PUMP CONTROL PLC PANEL CP-Y02
NOT TO SCALE

GREELEY AND HANSEN
1715 N. WESTSHORE BLVD., STE. 464
TAMPA, FLORIDA 33607
CERTIFICATE OF AUTHORIZATION NO. 37

NO SCALE

DESIGNED	TRG
DRAWN	TRG
CHECKED	DCH

NO.	DATE	APPD	REVISION

P.E. NAME: NORBERT VIRANYI P.E. NO. 72587

P.E. NAME:_____

DATE: _____

CITY OF TAMPA WASTEWATER DEPARTMENT
YBOR PUMPING STATION REHABILITATION

INSTRUMENTATION AND CONTROL

PANEL DETAILS

FILE: YBOREI04

NO. 14

DATE JUNE 2011