INDEX

ONLY APPLICABLE SHEETS ARE INCLUDED IN THE ATTACHEMENT

DRAWING NO.	TITLE
GENERAL	
AG 1	INDEX
AG 2	LOCATION MAP, ABBREVIATIONS, LEGEND AND BUILDING DATA
AG 3	SITE PLAN, CONSTRUCTION STAGING AREA, LEGEND PLAN AND GENERAL NOTES
OUTSIDE PIPING, PAVING AND GRADING	
AG 4	PART PLAN A
AG 5	PART PLAN B
AG 6	SECTIONS AND DETAILS
AG 7	SECTIONS AND DETAILS
STRUCTURAL	
AS 1	TYPICAL DETAILS
AS 2	TYPICAL DETAILS
AS 3	TYPICAL DETAILS AND GENERAL NOTES
ARCHITECTURAL	
AA 1	DOOR SCHEDULES AND DETAILS
AA 2	TYPICAL DETAILS
MECHANICAL	
AM 1	PIPING SYMBOLS AND NOTES
AM 2	PIPING DETAILS
AM 3	DENITRIFICATION FILTER DRAIN MODIFICATION PLAN, SECTIONS AND DETAILS
INSTRUMENTATION	
AI 1	LEGENDS AND ABBREVIATIONS
AI 2	SLUDGE STORAGE FACILITY AND CHLORINE PANEL MODIFICATIONS
AI 3	POLYMER SYSTEM AND MISC DETAILS
AI 4	PANEL DETAILS
AI 5	RTU CONFIGURATIONS
HVAC	
AH 1	HVAC LEGEND
AH 2	HVAC SCHEDULES AND DETAILS
ELECTRICAL	
AE 1	SITE PLAN
AE 2	MANHOLES, DETAILS AND SECTIONS
AE 3	DUCT SECTIONS
AE 4	OVERALL ONE LINE DIAGRAM
AE 5	SYMBOL LIST
AE 6	SYMBOL LIST
AE 7	13.2KV OUTDOOR SWITCHGEAR NO. 1 – MODIFICATIONS
AE 8	13.2KV OUTDOOR SWITCHGEAR NO. 1 – MODIFICATIONS SCHEMATIC DIAGRAMS
AE 9	13.2KV OUTDOOR SWITCHGEAR NO. 1 – MODIFICATIONS SCHEMATIC DIAGRAMS
AE10	13.2KV INDOOR SWITCHGEAR NO. 2 – MODIFICATIONS
AE11	13.2KV INDOOR SWITCHGEAR NO. 2 – MODIFICATIONS SCHEMATIC DIAGRAMS
AE12	13.2KV INDOOR SWITCHGEAR NO. 2 – MODIFICATIONS SCHEMATIC DIAGRAMS
AE13	13.2KV INDOOR SWITCHGEAR NO. 2 – MODIFICATIONS SCHEMATIC DIAGRAMS
AE14	MCC–86 ONE LINE DIAGRAM
AE15	DENITRIFICATION FILTER DRAIN MODIFICATIONS POWER PLANS
AE16	LIGHTING AND FIXTURE SCHEDULE
AE17	CONDUIT AND CABLE SCHEDULE
AE18	PLANS AND SECTIONS
AE19	MISCELLANEOUS PLANS AND DETAILS

DRAWING NO.	TITLE
CHLORINATION/DECHLORINATION MODIFICATIONS	
STRUCTURAL	
ES 1	PLANS AND SECTIONS
ES 2	PLANS AND SECTIONS
MECHANICAL	
EM 1	PLAN AT EL 18'–10", PART PLAN AND SECTIONS
EM 2	PART PLAN AT 18'–10" AND SECTIONS
EM 3	DETAILS, DIAGRAMS AND SECTION
ELECTRICAL	
EE 1	MCC–59 PARTIAL ONE LINE DIAGRAM, SCHEMATIC DIAGRAMS CONDUIT AND CABLE SCHEDULE
EE 2	POWER PLAN AT EL 18'–10" AND DETAILS
STANDBY POWER FACILITIES	
STRUCTURAL	
TS 1	PILE PLAN AND PILE CAP DETAILS
TS 2	PLAN AT EL 12'–0" AND SECTIONS
TS 3	PLAN AT EL 35'–0", EL 23'–6" AND SECTIONS
TS 4	HIGH ROOF PLAN AND SECTIONS
TS 5	SECTIONS
TS 6	FRAME ELEVATION DETAILS
TS 7	BEAM SCHEDULE
TS 8	SECTIONS AND PART BEAM SCHEDULE
TS 9	SECTIONS AND COLUMN SCHEDULE
TS10	SECTIONS
TS11	SECTION AND DETAILS
TS12	TRANSFORMER YARD – PLANS AND SECTIONS
ARCHITECTURAL	
TA 1	PLAN – FL EL 12'–0"
TA 2	PLAN – FL EL 35'–0"
TA 3	ROOF PLAN
TA 4	ELEVATIONS
TA 5	SECTIONS
TA 6	TRANSFORMER YARD PLANS, ELEVATIONS AND SECTIONS
MECHANICAL	
TM 1	PLAN – FL EL 12'–0"
TM 2	PLAN AT EL 21'–0"
TM 3	PLAN AT EL 33'–0"
TM 4	ROOF PLAN
TM 5	SECTION
TM 6	SECTIONS
TM 7	PLAN, SECTIONS AND DETAILS
TM 8	FUEL OIL STORAGE TANKS – PLAN AND SECTIONS
TM 9	DIAGRAMS
TM10	DIAGRAMS AND DETAILS
TM11	FLOOR DRAIN – PLAN AND SECTION
TM12	ROOF DRAIN – PLAN
TM13	ROOF DRAIN – SECTIONS

DRAWING NO.	TITLE
STANDBY POWER FACILITIES	
HVAC	
TH 1	PLAN – FL EL 12'–0"
TH 2	PLAN AT EL 42'–0"
TH 3	SECTIONS AND CONTROL DIAGRAMS
ELECTRICAL	
TE 1	13.2KV INDOOR SWITCHGEAR NO. 3 ONE LINE DIAGRAM
TE 2	13.2KV INDOOR SWITCHGEAR NO. 3 ONE LINE DIAGRAM
TE 3	13.2KV INDOOR SWITCHGEAR NO. 3 ONE LINE DIAGRAM
TE 4	13.2KV INDOOR SWITCHGEAR NO. 3 FRONT ELEVATION
TE 5	13.2KV INDOOR SWITCHGEAR NO. 3 DETAILS
TE 6	SCHEMATIC DIAGRAMS
TE 7	SCHEMATIC DIAGRAMS
TE 8	MOTOR CONTROL CENTER MCC–92 ONE LINE DIAGRAM
TE 9	MOTOR CONTROL CENTER MCC–92 ONE LINE DIAGRAM
TE10	MOTOR CONTROL CENTER MCC–92 ONE LINE DIAGRAM AND ELEVATION
TE11	SCHEMATIC DIAGRAMS
TE12	SCHEMATIC DIAGRAMS
TE13	STANDBY GENERATOR BUILDING – POWER PLAN
TE14	STANDBY GENERATOR BUILDING – POWER PLAN
TE15	STANDBY GENERATOR BUILDING – LIGHTING PLANS
TE16	LIGHTING PANELBOARD SCHEDULE
TE17	CONDUIT AND CABLE SCHEDULE
TE18	CONDUIT AND CABLE SCHEDULE
SLUDGE STORAGE TANKS, CONTROL BUILDING AND VEHICLE MAINTENANCE FACILITY	
STRUCTURAL	
	SLUDGE STORAGE TANKS
US 1	PILE PLAN AND SECTIONS
US 2	PLAN AT EL 28'–0" AND SECTIONS
US 3	PLAN AT EL 45'–6" AND SECTIONS
US 4	SECTION
	VEHICLE MAINTENANCE FACILITY
US 5	FOUNDATION PLAN AND SECTION
US 6	ROOF FRAMING PLAN AND DETAILS
ARCHITECTURAL	
	VEHICLE MAINTENANCE FACILITY
UA 1	PLAN
UA 2	SECTIONS AND DETAILS

DRAWING NO.	TITLE
SLUDGE STORAGE TANKS, CONTROL BUILDING AND VEHICLE MAINTENANCE FACILITY	
MECHANICAL	
	SLUDGE STORAGE TANKS
UM 1	SLUDGE STORAGE PIPING SCHEMATIC
UM 2	PLAN AT EL 22'–0"
UM 3	PLAN AT EL 45'–0"
UM 4	PLAN AT EL 49'–0", PLANT AIR AND EFFLUENT WATER DIAGRAMS
UM 5	PLAN – VALVE AND METER PAD
UM 6	SECTIONS
UM 7	SECTIONS
	CONTROL BUILDING
UM 8	DEMOLITION PLAN – EAST
UM 9	DEMOLITION PLAN – WEST AND DEMOLITION SECTIONS
UM10	PLAN – AT EL 3'–0" AND PLANT AIR DIAGRAM
UM11	PLAN AT EL 7'–6" AND PLANT WATER DIAGRAM
UM12	PLAN AT EL 8'–5" AND EFFLUENT WATER DIAGRAM
UM13	PLAN AT EL 10'–0" AND POLYMER SYSTEM DIAGRAM
UM14	PLAN AND SECTIONS
UM15	SECTIONS
UM16	SECTIONS
ELECTRICAL	
	SLUDGE STORAGE TANKS AND CONTROL BUILDING
UE 1	MOTOR CONTROL CENTER 480–VOLT MCC–501A ONE LINE DIAGRAM AND ELEVATION
UE 2	MOTOR CONTROL CENTER 480–VOLT MCC–501B ONE LINE DIAGRAM AND ELEVATION
UE 3	SLUDGE TRANSFER AND POLYMER FEED PUMP CONTROL PANEL–ONE LINE DIAGRAMS AND ELEVATIONS
UE 4	SCHEMATIC DIAGRAMS
UE 5	SCHEMATIC DIAGRAMS
UE 6	CONTROL BUILDING – POWER PLAN
UE 7	CONTROL BUILDING AND VEHICLE MAINTENANCE FACILITY POWER PLAN LIGHTING PLAN
UE 8	SLUDGE STORAGE TANKS NO. 4 AND NO. 5– POWER PLAN
UE 9	VALVE AND METER PAD POWER PLAN
UE10	SLUDGE STORAGE TANKS NO. 4 AND NO. 5 – LIGHTING PLAN
UE11	CONDUIT AND CABLE SCHEDULE
UE12	CONDUIT AND CABLE SCHEDULE

RECORD DRAWING

THIS RECORD DRAWING IS NOT WARRANTED BUT IS BELIEVED TO REPRESENT CONDITIONS UPON COMPLETION OF CONSTRUCTION WITHIN REASONABLE TOLERANCES, BASED UPON THE INFORMATION FURNISHED TO THE ENGINEER PERTAINING TO CHANGES MADE DURING CONSTRUCTION.

GREELEY AND HANSEN
ENGINEERS
1715 NORTH WESTSHORE BOULEVARD
TAMPA, FLORIDA 33607–4135

DESIGNED DCH
DRAWN ROO
CHECKED DCH

APPROVED _____ DATE _____
_____ DATE _____
GREELEY AND HANSEN, ENGINEERS

NO.	DATE	APPD	REVISION
3	30/7/96		RECORD DWG REVISIONS

SCALE
NO SCALE

CITY OF TAMPA, FLORIDA
HOOKERS POINT WASTEWATER TREATMENT PLANT
PLANT EXPANSION
PHASE I DIVISION 5H3B
STANDBY POWER AND SLUDGE STORAGE FACILITIES

GENERAL
INDEX

PROJ NO. 202G
DWG AG1
SHEET
DATE DECEMBER 1991 REV 3

5H3B_0AG-001

FILE: H3B-AG01 SCALE: 1:1 09/04, 1996 at 15:27 – *13_c4h (Hardware Lock)*

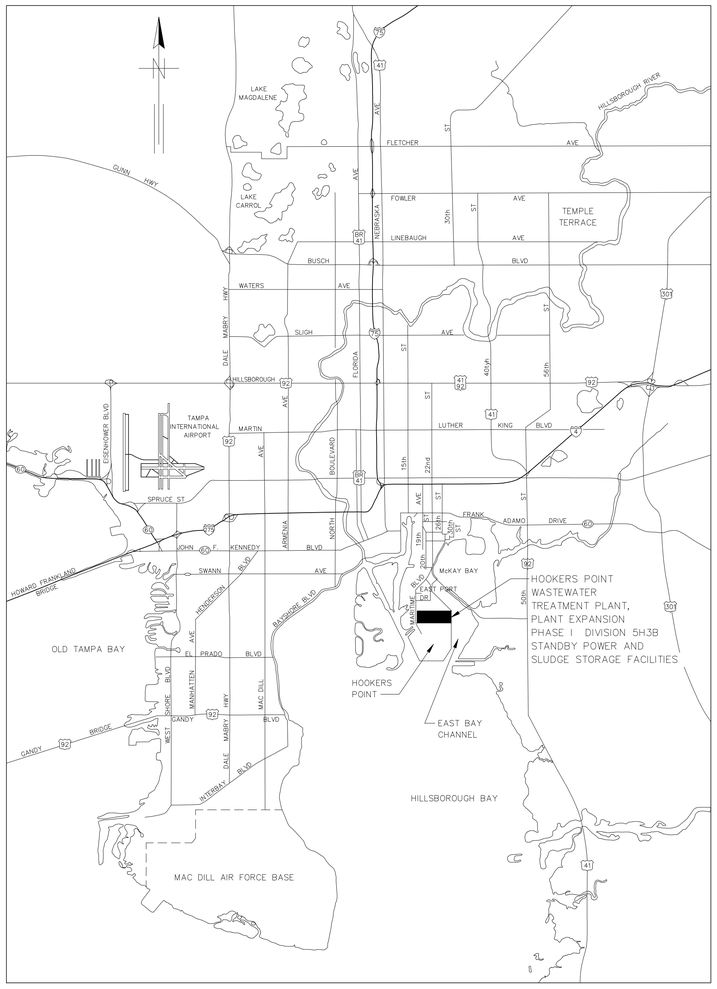

LOCATION MAP

NOT TO SCALE

LIST OF ABBREVIATIONS

A	PLANT AIR
AL	ALUMINUM
ATS	AIR TOOL STATION
BAB	BACKWASH AIR BLOWER
BAV	BACKWASH AIR VALVE
B/C	BACK OF CURB
BDV	BACKWASH DRAIN VALVE
BF	BLIND FLANGE
BV	BUTTERFLY VALVE
BWCV	BACKWASH WATER CONTROL VALVE
BWIV	BACKWASH WATER ISOLATION VALVE
BWP	BACKWASH WATER PUMP
BWV	BACKWASH WATER VALVE
B/W	BACKWASH
CC	CONTROL CENTER
CA	COMPRESSED AIR
CI	CAST IRON
CL	CHLORINE SOLUTION
CONC	CONCRETE
CW	CITY WATER
D	DRAIN
DD	DECK DRAIN
DI	DUCTILE IRON PIPE
DWG	DRAWING
DWP	DEWATERING PUMP
E	ELECTRIC CONDUIT, DUCT OR MANHOLE
ED	EQUIPMENT DRAIN
EFL	EFFLUENT
EL	ELEVATION
EOP	EDGE OF PAVEMENT
EP	EQUIPMENT PAD
EW	EFFLUENT WATER
F	FLANGE
FD	FLOOR DRAIN
FEV	FILTER EFFLUENT VALVE
FH	FIRE HYDRANT
FIV	FILTER INFLUENT VALVE
FL	FLOOR
FM	FORCE MAIN
FRP	FIBER REINFORCED PLASTIC
HP	HIGH POINT
HPI	HORIZONTAL POINT OF INTERSECTION
INFL	INFLUENT
INV	INVERT
IRR	IRRIGATION
LP	LOW POINT
MH	MANHOLE
MJ	MECHANICAL JOINT
NP	NATIONAL PIPE THREAD
PA	PIPE ANCHOR
PAC	PLANT AIR COMPRESSOR
PCCP	PRESTRESSED CONCRETE CYLINDER PIPE
PE	PLAIN END
PH	PIPE HANGER
PS	PIPE SUPPORT
PSC	PRIMARY SCUM
PSL	PRIMARY SLUDGE
PSP	PRIMARY SLUDGE PUMP
PVC	POLYVINYL CHLORIDE PIPE
PW	PLANT WATER
PSP	PLANT WATER PUMP
RAS	RETURN ACTIVATED SLUDGE
RCP	REINFORCED CONCRETE PIPE
S	SEWER
SCWR	SPENT COOLING WATER RETURN
SE	SECONDARY EFFLUENT
SG	SLUICE GATE
SLG	SLIDE GATE
SP	SUMP PUMP
SPD	SUMP PUMP DISCHARGE
SS	SERVICE SINK
SST	STAINLESS STEEL
STL	STEEL
ST	STORM WATER
S/W	SIDEWALK
TC	TOP OF CURB
TP	TOP OF PAVEMENT
TS	THICKENED SLUDGE
TYP	TYPICAL
TWAS	THICKENED WASTE ACTIVATED SLUDGE
V	VENT
VPI	VERTICAL POINT OF INTERSECTION
W	WATER
WAS	WASTE ACTIVATED SLUDGE

LEGEND

EXISTING	NEW	
◇CB	◇CB	CATCH BASIN
○MH	○MH	MANHOLE
□	□	METER
		DIRECT BURIAL VALVE
		FIRE HYDRANT
⊙L	⊙L	LIGHT POLE
⊙S	⊙S	SIGN
⊙F	⊙F	FLAG POLE
⊙G	⊙G	GUY POLE
⊙P	⊙P	POLE
		POWER POLE
		STRUCTURE
		LAWN HYDRANT
		SIDEWALK
		SMALL PIPING
		LARGE PIPES AND CONDUITS
		ELECTRICAL DUCT
		IRRIGATION PIPING
		FENCE
× 9.5	×10.7	SPOT ELEVATION
? 5+32Y	? 5+32Y	? ELEVATION
6+24Y 5+85X	6+24Y 5+85X	PLANT COORDINATES
50	50	GRADE CONTOURS
	N/A	PROPERTY LINE

BUILDING DATA

1. STANDBY POWER FACILITY AND VEHICLE MAINTENANCE FACILITY ARE CLASSIFIED AS FOLLOWS:

   A. STANDBY POWER FACILITY IS CLASSIFIED AS TYPE IV, UNPROTECTED, UNSPRINKLERED, FACTORY-INDUSTRIAL OCCUPANCY, GROUP F AS DEFINED BY THE SOUTHERN STANDARD BUILDING CODE, CHAPTER 4, TABLE 400 AND IS NON-HAZARDOUS.

   B. VEHICLE MAINTENANCE FACILITY IS AN ADDITION CLASSIFIED AS TYPE V, UNPROTECTED, UNSPRINKLERED, FACTORY-INDUSTRIAL OCCUPANCY, GROUP F AS DEFINED BY THE SOUTHERN STANDARD BUILDING CODE, CHAPTER 4, TABLE 400 AND IS NON-HAZARDOUS. IT IS SEPARATED FROM THE EXISTING TYPE IV STRUCTURE BY A 12-INCH THICK CONCRETE WALL HAVING A FIRE RESISTANCE RATING EXCEEDING 4 HOURS AS DEFINED BY THE SOUTHERN BUILDING CODE, CHAPTER 31, TABLE 3102.1A.

2. BUILDING AREAS AND HEIGHTS ARE SUMMARIZED AS FOLLOWS:

   A. STANDBY POWER FACILITY:

GRADE FLOOR (FOOTPRINT AREA)	6622 SF
PLENUM ACCESS MEZZANINE	831 SF
TOTAL BUILDING AREA	7453 SF
SINGLE STORY BUILDING WITH MEZZANINE	27'-6" HIGH

   B. VEHICLE MAINTENANCE FACILITY

GRADE FLOOR (FOOTPRINT AREA)	
EXISTING ENCLOSED BUILDING	2120 SF
OPEN COVERED MAINTENANCE AREA	1176 SF
OPEN COVERED STORAGE AREA	972 SF
SINGLE STORY BUILDING	12'-0" HIGH (EXIST. ENCL.) 22'-0" HIGH (OPEN COVERED MAINTENANCE) 12'-0" HIGH (OPEN COVERED STORAGE)

3. BUILDING SETBACKS COMPLY WITH SOUTHERN STANDARD BUILDING CODE TABLE 600.

4. ALL CONSTRUCTION SHALL COMPLY WITH THE FOLLOWING CURRENTLY ADOPTED CODES:
   A. CHAPTER 11, TAMPA CITY CODE, WHICH INCLUDES NATIONAL FIRE PROTECTION ASSOCIATION CODES, STANDARD FIRE PREVENTION CODE, N.F.P.A. 101, LIFE SAFETY CODE.
   B. CHAPTER 5, TAMPA CITY CODE, WHICH INCLUDES STANDARD BUILDING CODE, STANDARD MECHANICAL CODE, AND N.F.P.A. 70, NATIONAL ELECTRICAL CODE.
   C. FLORIDA STATUTE 633, WHICH INCLUDES STATE FIRE MARSHALL'S RULES AND REGULATIONS.

RECORD DRAWING

THIS RECORD DRAWING IS NOT WARRANTED BUT IS BELIEVED TO REPRESENT CONDITIONS UPON COMPLETION OF CONSTRUCTION WITHIN REASONABLE TOLERANCES, BASED UPON THE INFORMATION FURNISHED TO THE ENGINEER PERTAINING TO CHANGES MADE DURING CONSTRUCTION.

GREELEY AND HANSEN
ENGINEERS
1715 NORTH WESTSHORE BOULEVARD
TAMPA, FLORIDA 33607-4135

DESIGNED ROO
DRAWN RAM
CHECKED DCH

APPROVED _____ DATE _____
_____ DATE _____
GREELEY AND HANSEN, ENGINEERS

NO.	DATE	APPD	REVISION
1	30/7/96		RECORD DWG REVISIONS

SCALE
NOT TO SCLAE

CITY OF TAMPA, FLORIDA
HOOKERS POINT WASTEWATER TREATMENT PLANT
PLANT EXPANSION
PHASE I DIVISION 5H3B
STANDBY POWER AND SLUDGE STORAGE FACILITIES

GENERAL

LOCATION MAP, ABBREVIATIONS, LEGEND AND BUILDING DATA

PROJ NO. 202G
DWG AG2
SHEET
DATE DECEMBER 1991 REV 4

5H3B_0AG-002

FILE: H3B-A002 SCALE: 1:1 09/04, 1996 at 15:43 - *13.4in (Hardware Lock)*

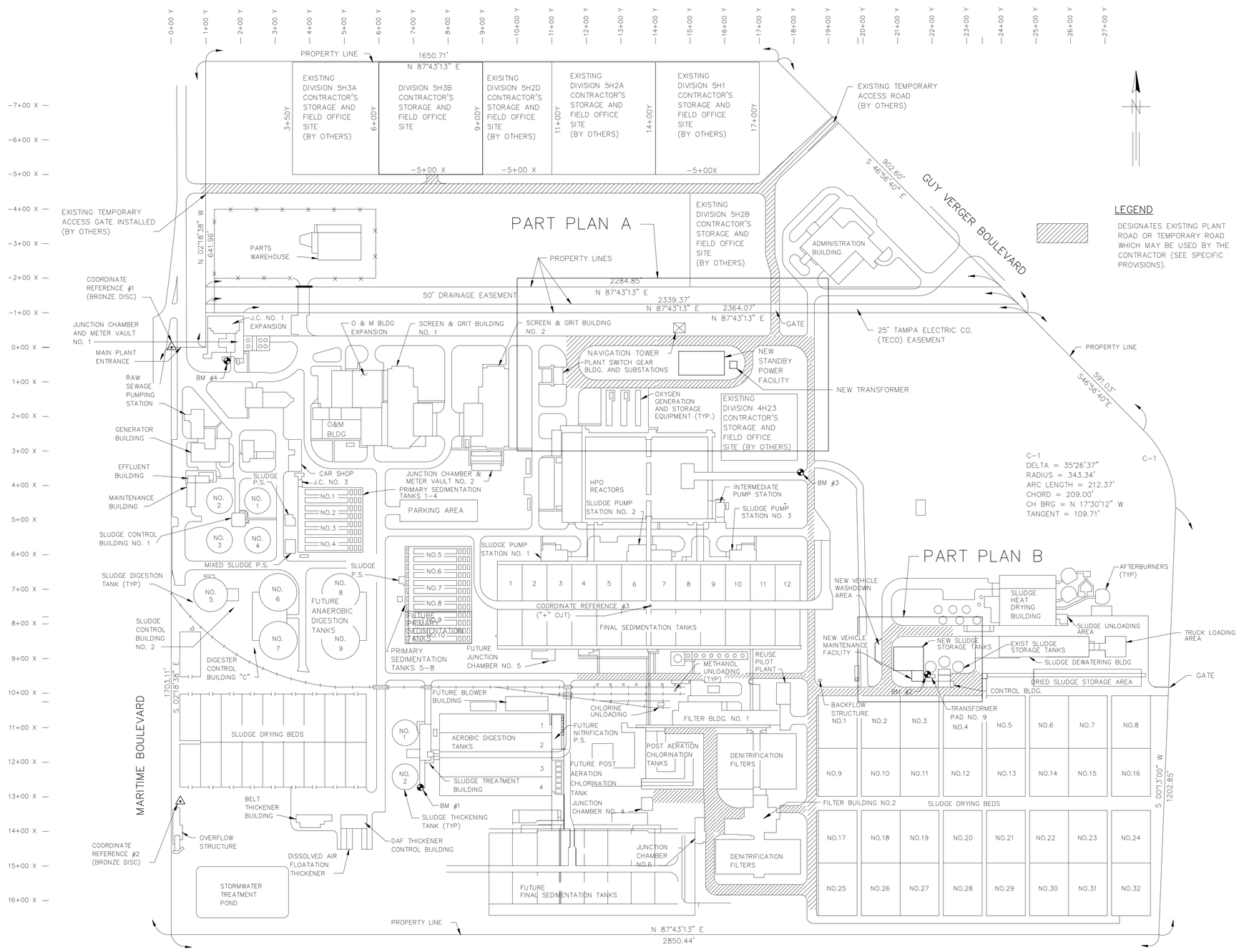

LEGEND

DESIGNATES EXISTING PLANT ROAD OR TEMPORARY ROAD WHICH MAY BE USED BY THE CONTRACTOR (SEE SPECIFIC PROVISIONS).

GENERAL NOTES

1. THE X AND Y PLANT COORDINATE SYSTEM SHOWN IS DEFINED BY THE FOLLOWING COORDINATE REFERENCE POINTS:

   COORDINATE REFERENCE POINTS:

		X-COORDINATES	Y-COORDINATES
COORDINATE REFERENCE	#1	- 0+0.077	+ 0+01.378
COORDINATE REFERENCE	#2	+13+45.989	+ 0+26.679
COORDINATE REFERENCE	#3	+ 7+47.580	+13+85.000

   AT LEAST TWO OF THE COORDINATE REFERENCE POINTS SHALL BE USED TO ESTABLISH THE BEARINGS OF THE PLANT COORDINATE SYSTEM AND TO ESTABLISH NEW COORDINATE LOCATIONS.
2. ALL ELEVATIONS REFER TO THE TAMPA OLD CITY DATUM (OCD). TO CONVERT TO THE NATIONAL OCEAN SURVEY DATUM (NOS), SUBSTRACT 0.15 FEET.

   BENCH MARKS:

   BM#1 BRONZE DISC SET IN CONCRETE SLAB, 1.8'N AND 1.8'E OF SOUTHWEST CORNER OF SLAB. ELEV. = 10.78 O.C.D.
   BM#2 BRONZE DISC SET IN TAMPA ELECTRIC PAD 2.0'S AND 2.5'E OF NORTHWEST CORNER OF PAD. ELEV. = 15.92 O.C.D.
   BM#3 BRONZE DISC SET 2.5'W OF EAST END OF CONCRETE CURB 1.5' ABOVE PAVEMENT. ELEV. = 11.60 O.C.D.
   BM#4 BRONZE DISC SET IN THE TOP OF CONCRETE IN THE SOUTHEAST CORNER OF THE FOUNDATION FOR 2 TRANSFORMERS SOUTH OF JUNCTION CHAMBER NO. 1. ELEV. = 8.86 O.C.D.
3. THE 100-YEAR FLOOD RECURRENCE INTERVAL IS ELEVATION 11.15 BASED ON THE OLD CITY DATUM.
4. LOCATIONS, ELEVATIONS AND DIMENSIONS OF EXISTING PIPING, STRUCTURES AND OTHER FEATURES ARE SHOWN ACCORDING TO THE BEST INFORMATION AVAILABLE AT THE TIME OF THE PREPARATION OF THESE PLANS BUT DO NOT PURPORT TO BE ABSOLUTELY CORRECT. THE CONTRACTOR SHALL VERIFY THE LOCATIONS, ELEVATIONS AND DIMENSIONS OF ALL EXISTING PIPING, STRUCTURES AND OTHER FEATURES AFFECTING HIS WORK PRIOR TO CONSTRUCTION. THE CONTRACTOR SHALL REPORT ANY DISCREPANCIES TO THE ENGINEER PRIOR TO PROCEEDING WITH THE WORK.
5. THE CONTRACTOR SHALL PROVIDE ADVANCED NOTICE TO THE CITY IN ORDER TO COORDINATE CONSTRUCTION ACTIVITIES AFFECTING PLANT OPERATIONS. THE CITY RESERVES THE RIGHT TO POSTPONE ANY CONSTRUCTION ACTIVITY THAT WOULD INTERFERE WITH THEIR PLANT OPERATIONS UNTIL SUCH TIME WHEN THE CONTRACTOR WILL BE NOTIFIED TO PROCEED. SEE SPECIFIC PROVISIONS SEQUENCE OF OPERATIONS FOR FURTHER DETAILS.
6. * DENOTES DIMENSIONS, ELEVATIONS AND LOCATIONS TO BE VERIFIED OR DETERMINED AFTER FINAL SELECTION OF PIPING AND EQUIPMENT.
7. ** DIMENSIONS OR ELEVATIONS NOTED THUS ** WILL DIRECTLY AFFECT THE WORK. SEE NOTE 4 ABOVE. THE CONTRACTOR SHALL BE RESPONSIBLE TO MAKE ANY AND ALL ADJUSTMENTS IN NEW CONSTRUCTION NECESSARY TO SUIT EXISTING DIMENSIONS OR ELEVATIONS AT NO CHANGE IN CONTRACT PRICE.
8. ALL CONSTRUCTION SHALL COMPLY WITH APPLICABLE STATE AND LOCAL CODES.
9. EROSION/SEDIMENTATION CONTROL - CONTRACTOR SHALL PROVIDE EROSION CONTROL/SEDIMENTATION BARRIER (HAY BALES OR SILTATION CURTAIN) TO PREVENT SILTATION OF ADJACENT PROPERTY, STREETS, STORM SEWERS AND WATERWAYS. IN ADDITION, CONTRACTOR SHALL PLACE STRAW, MULCH OR OTHER SUITABLE MATERIAL ON GROUND IN AREAS WHERE CONSTRUCTION RELATED TRAFFIC IS TO ENTER AND EXIT SITE. IF, IN THE OPINION OF THE ENGINEER AND/OR LOCAL AUTHORITIES, EXCESSIVE QUANTITIES OF EARTH ARE TRANSPORTED OFF-SITE EITHER BY NATURAL DRAINAGE OR BY VEHICULAR TRAFFIC, THE CONTRACTOR SHALL REMOVE AND CLEAN SAID EARTH TO THE SATISFACTION OF THE ENGINEER AND/OR AUTHORITIES.
10. ELEVATIONS AND COORDINATES SHOWN ON EXISTING STRUCTURES ARE BASED ON SURVEY INFORMATION. IT IS THE INTENTION OF THE DESIGN THAT WHERE NEW STRUCTURES ARE SHOWN TO CONNECT TO EXISTING STRUCTURES, THE ELEVATIONS AND COORDINATES OF THE NEW AND EXISTING STRUCTURES SHALL MATCH. THE CONTRACTOR SHALL VERIFY SUCH EXISTING ELEVATIONS AND COORDINATES AND SHALL BE RESPONSIBLE TO MAKE ANY AND ALL ADJUSTMENTS IN NEW CONSTRUCTION TO SUIT EXISTING ELEVATIONS AND COORDINATES PRIOR TO CONSTRUCTION AT NO CHANGE IN CONTRACT PRICE.

RECORD DRAWING

THIS RECORD DRAWING IS NOT WARRANTED BUT IS BELIEVED TO REPRESENT CONDITIONS UPON COMPLETION OF CONSTRUCTION WITHIN REASONABLE TOLERANCES, BASED UPON THE INFORMATION FURNISHED TO THE ENGINEER PERTAINING TO CHANGES MADE DURING CONSTRUCTION.

GREELEY AND HANSEN
ENGINEERS
1715 NORTH WESTSHORE BOULEVARD
TAMPA, FLORIDA 33607-4135

DESIGNED	LCC
DRAWN	ROO
CHECKED	DCH

APPROVED _____ DATE _____

_____ DATE _____
GREELEY AND HANSEN, ENGINEERS

NO.	DATE	APPD	REVISION
2	7/30/96		RECORD DWG REVISIONS

SCALE
150 0 150 300 FT
1"=150'

CITY OF TAMPA, FLORIDA
HOOKERS POINT WASTEWATER TREATMENT PLANT
PLANT EXPANSION
PHASE I DIVISION 5H3B
STANDBY POWER AND SLUDGE STORAGE FACILITIES

GENERAL

SITE PLAN, CONSTRUCTION STAGING AREA, LEGEND PLAN, AND GENERAL NOTES

PROJ NO. 202G
DWG AG3
SHEET 3
DATE DECEMBER 1991
REV 2

5H3B_0AG-003

FILE: H3B-AG3 SCALE: 1:150 09/04, 1996 at 15:53 - *13_cdh (Hardware Lock)*

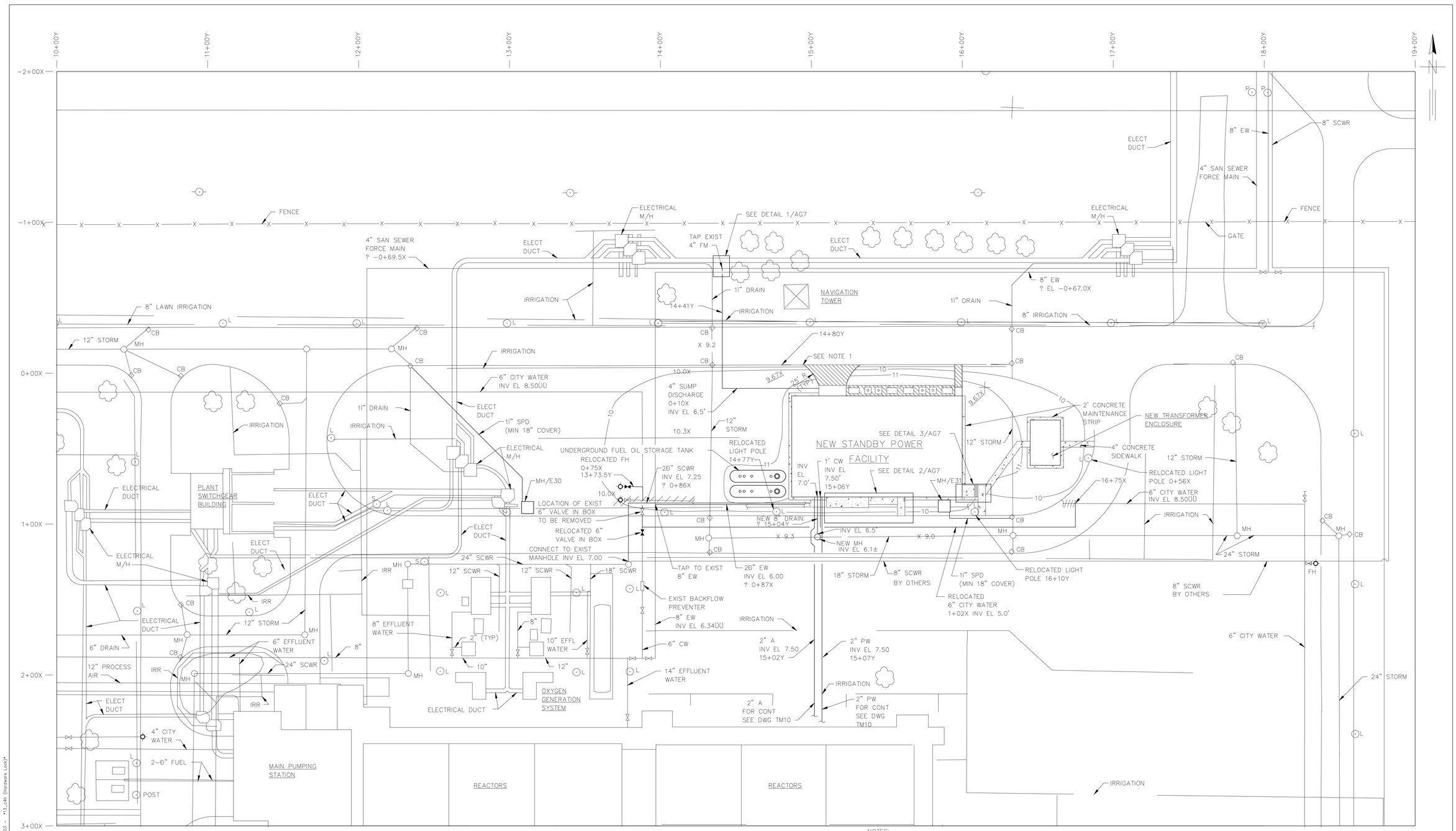

LEGEND

PAVEMENT

SIDEWALK

PART PLAN A

RECORD DRAWING

THIS RECORD DRAWING IS NOT WARRANTED BUT IS BELIEVED TO REPRESENT CONDITIONS UPON COMPLETION OF CONSTRUCTION WITHIN REASONABLE TOLERANCES, BASED UPON THE INFORMATION FURNISHED TO THE ENGINEER PERTAINING TO CHANGES MADE DURING CONSTRUCTION.

NOTES:

1. NEW PAVEMENT ELEVATIONS SHALL MATCH EXISTING PAVEMENT ELEVATIONS.
2. SEE STRUCTURAL DRAWINGS FOR BUILDING COORDINATES.
3. SEE SPECIFICATIONS FOR SODDING AND RESTORATION OF DISTURBED AREAS.
4. INVERT OF MIAMI CURB TO MATCH GUTTER ELEVATION OF EXISTING CURB.
5. REFER TO LIGHTING POLE BASE DETAIL, DRAWING AE2, FOR LIGHTING POLE RELOCATION.
6. RELOCATION OF CITY WATER LINES SHALL BE CONSTRUCTED BY FIRE PROTECTION CONTRACTOR WITH 1,2 AND 5 CLASS LICENSE.

GREELEY AND HANSEN
ENGINEERS
1715 NORTH WESTSHORE BOULEVARD
TAMPA, FLORIDA 33607-4135

DESIGNED	LCC,DCH
DRAWN	ROO
CHECKED	DCH

APPROVED _____ DATE _____

_____ DATE _____

GREELEY AND HANSEN, ENGINEERS

NO.	DATE	APPD	RECORD DWG REVISIONS
4	8/1/96		REVISION

SCALE

30 0 30 60 FT

1"=30'

CITY OF TAMPA, FLORIDA
HOOKERS POINT WASTEWATER TREATMENT PLANT
PLANT EXPANSION
PHASE I DIVISION 5H3B
STANDBY POWER AND SLUDGE STORAGE FACILITIES

GENERAL
OUTSIDE PIPING, PAVING AND GRADING
PART PLAN A

See Supplemental Drawing SD-1

PROJ NO.	202G
DWG	AG4
SHEET	
DATE	DECEMBER 1991
REV	4

5H3B_0AE-004

FILE: H3B-AG04 SCALE: 1:30 09/04, 1998 at 16:03 - *13_4th (Hardware Lock)*

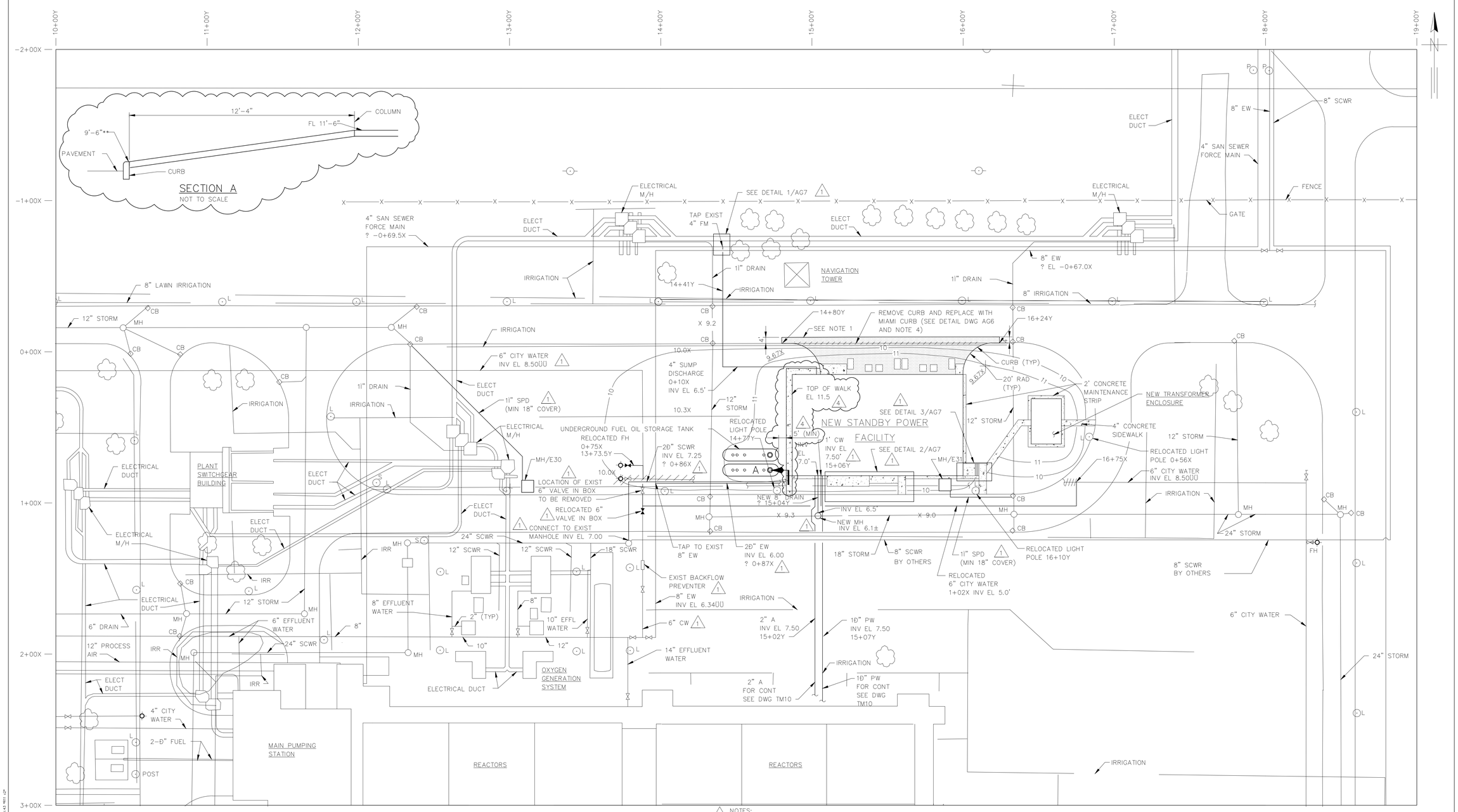

PART PLAN A

NOTES:

1. NEW PAVEMENT ELEVATIONS SHALL MATCH EXISTING PAVEMENT ELEVATIONS.
2. SEE STRUCTURAL DRAWINGS FOR BUILDING COORDINATES.
3. SEE SPECIFICATIONS FOR SODDING AND RESTORATION OF DISTURBED AREAS.
4. INVERT OF MIAMI CURB TO MATCH GUTTER ELEVATION OF EXISTING CURB.
5. REFER TO LIGHTING POLE BASE DETAIL, DRAWING AE2, FOR LIGHTING POLE RELOCATION.
6. RELOCATION OF CITY WATER LINES SHALL BE CONSTRUCTED BY FIRE PROTECTION CONTRACTOR WITH 1,2 AND 5 CLASS LICENSE.

REVISES DWG AG4

GREELEY AND HANSEN
ENGINEERS
4350 WEST CYPRESS STREET
TAMPA, FLORIDA 33607-4135

DESIGNED	LCC,DCH
DRAWN	ROO
CHECKED	DCH

APPROVED _____ DATE _____

_____ DATE _____

GREELEY AND HANSEN, ENGINEERS

NO.	DATE	APPD	REVISION
4	4/7/93	DCH	FIRE MARSHAL'S COMMENTS
3	7/21/92	DCH	FIRE MARSHAL'S COMMENTS
2	7/21/92	DCH	ADDED NOTE NO. 5
1	2/11/92	DCH	MISC. REVISIONS

SCALE
30 0 30 60 FT
1"=30'

CITY OF TAMPA, FLORIDA
HOOKERS POINT WASTEWATER TREATMENT PLANT
PLANT EXPANSION
PHASE I DIVISION 5H3B
STANDBY POWER AND SLUDGE STORAGE FACILITIES

GENERAL
OUTSIDE PIPING, PAVING AND GRADING
PART PLAN A

PROJ NO.	202G
DWG	SD-1
SHEET	
DATE	DECEMBER 1991
REV	4

5H3B_0AE-004A

FILE: H:\ACAD\WORK\5H3B0005.DWG SCALE: 1:30 05/07, 1993 at 14:43 HP611 c2*

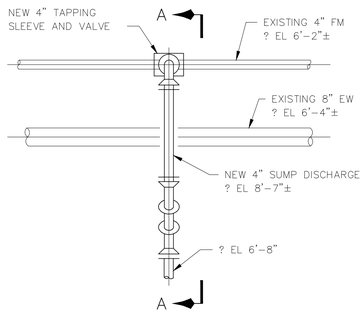

DETAIL 1/AG4

SCALE: 1"=1'-0"

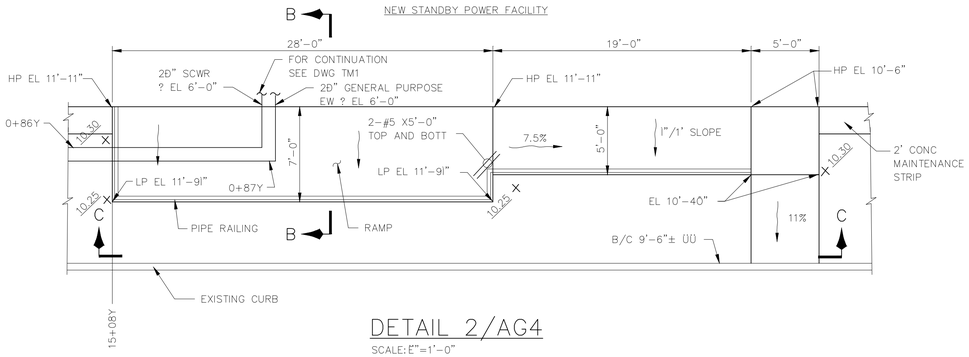

DETAIL 2/AG4

SCALE: E"=1'-0"

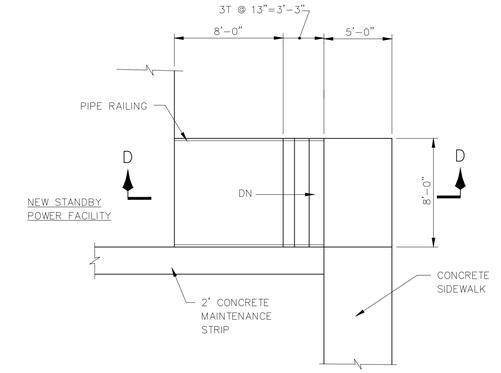

DETAIL 3/AG4

SCALE: E"=1'-0"

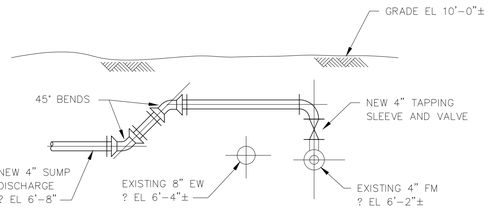

SECTION A

SCALE: 1"=1'-0"

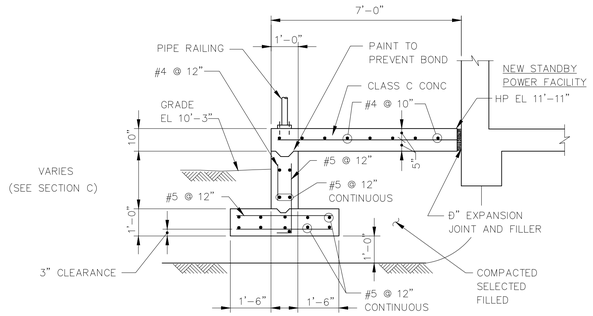

SECTION B

SCALE: 1"=1'-0"

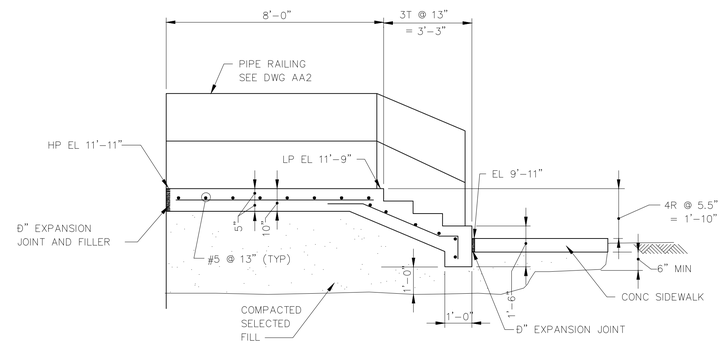

SECTION D

SCALE: 1"=1'-0"

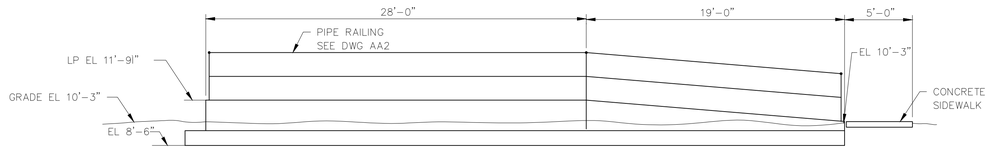

SECTION C

SCALE: E"=1'-0"

RECORD DRAWING

THIS RECORD DRAWING IS NOT WARRANTED BUT IS BELIEVED TO REPRESENT CONDITIONS UPON COMPLETION OF CONSTRUCTION WITHIN REASONABLE TOLERANCES, BASED UPON THE INFORMATION FURNISHED TO THE ENGINEER PERTAINING TO CHANGES MADE DURING CONSTRUCTION.

GREELEY AND HANSEN
ENGINEERS
1715 NORTH WESTSHORE BOULEVARD
TAMPA, FLORIDA 33607-4135

DESIGNED LCC
DRAWN MSB
CHECKED DCH

APPROVED _____ DATE _____
_____ DATE _____
GREELEY AND HANSEN, ENGINEERS

NO.	DATE	APPD	REVISION
3	8/2/96		RECORD DWG REVISIONS

SCALE
4 0 4 8 12 FT 3/16"=1'-0"
1 0 1 2 3 4 5 6 7 FT 3/8"=1'-0"

CITY OF TAMPA, FLORIDA
HOOKERS POINT WASTEWATER TREATMENT PLANT
PLANT EXPANSION
PHASE I DIVISION 5H3B
STANDBY POWER AND SLUDGE STORAGE FACILITIES

GENERAL
SECTIONS AND DETAILS

PROJ NO. 202G
DWG AG7
SHEET
DATE DECEMBER 1991 REV 3

5H3B_0AG-007

FILE: H3B-A007 SCALE: 1:32 09/05, 1996 at 08:08 - *13_c4h (Hardware Lock)*

REINFORCING–LAP SPLICE TABLE

GRADE 60 REINF
4000 PSI CONC

BAR SIZE		3	4	5	6	7	8	9	10	11
OUTER LAYER	TOP BARS	1'–6"	2'–0"	2'–6"	3'–0"	3'–6"	4'–3"	7'–6"	9'–6"	11'–8"
	OTHER BARS	1'–2"	1'–7"	1'–11"	2'–4"	2'–9"	3'–3"	5'–9"	7'–4"	9'–0"
INNER LAYER	TOP BARS	1'–6"	2'–0"	2'–6"	3'–0"	3'–6"	4'–3"	5'–4"	6'–9"	8'–4"
	OTHER BARS	1'–2"	1'–7"	1'–11"	2'–4"	2'–9"	3'–3"	4'–2"	5'–3"	6'–5"

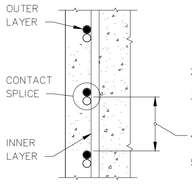

1. TOP BARS ARE ALL HORIZONTAL BARS SO PLACED THAT MORE THAN 12" OF CONCRETE IS PLACED IN THE MEMBER BELOW THE BAR. THIS INCLUDES HORIZONTAL WALL REINFORCEMENT.
2. WHERE BARS OF DIFFERENT SIZES ARE LAP SPLICED USE LAP LENGTH FOR SMALLER BAR.
3. FOR EPOXY COATED BARS INCREASE LAP LENGTHS 20% FOR #3, #4 & #5 BARS & 50% FOR #6 THRU #11 BARS.
4. THIS TABLE IS FOR CLEAR DISTANCE EQUAL TO OR GREATER THAN 3 BAR DIAMETERS.
5. FOR CLEAR DISTANCE LESS THAN 3 BAR DIAMETERS SPLICE LENGTHS SHOWN MUST BE DOUBLED.

1

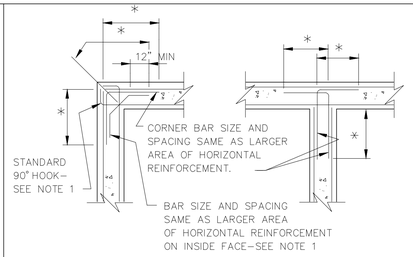

NOTES :

1. REQUIRED ONLY WHERE WALLS ARE SUBJECT TO FLUID PRESSURE FROM INSIDE.
2. * – SEE SPLICE TABLE.

HORIZONTAL CORNER BAR DETAIL

2

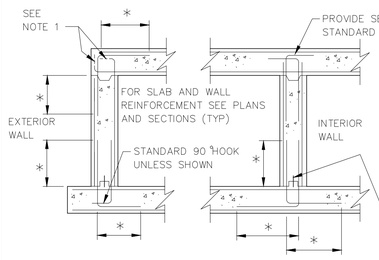

NOTES :

1. PROVIDE STANDARD 90 ° HOOK FOR SLAB AND WALL REINFORCEMENT OF TANKS AND CONDUITS SUBJECT TO FLUID PRESSURE FROM INSIDE.
2. * – SEE SPLICE TABLE, UNLESS SHOWN IN SECTIONS.

WALL REINFORCEMENT PLACING DIAGRAM

3

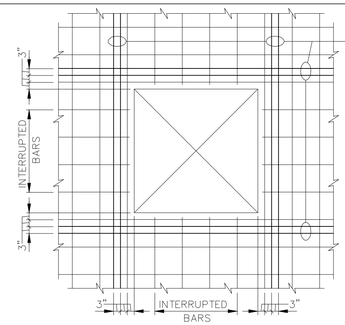

Ð OF INTERRUPTED BARS SAME SIZE AS UNINTERRUPTED BARS LENGTH TO EXTEND ONE SPLICE LENGTH EACH SIDE OF OPENING OR TO NEAREST SUPPORT (2'–0" MIN.). BARS TO BE HOOKED WHERE SPLICE LENGTH ANCHORAGE IS NOT POSSIBLE. WHERE INVERT OF OPENING AND TOP OF SLAB IS LESS THAN SPLICE LENGTH, BARS SHALL BE DOWELED INTO SLAB.

Ð OF INTERRUPTED BARS SEE NOTE ABOVE

ALL OPENINGS TO BE REINFORCED AS SHOWN IN THESE DETAILS UNLESS OTHERWISE SHOWN ON CONTRACT DRAWINGS.

ADDITIONAL REINFORCING AT OPENINGS * IN WALLS AND SLABS

* 48" OR SMALLER

7

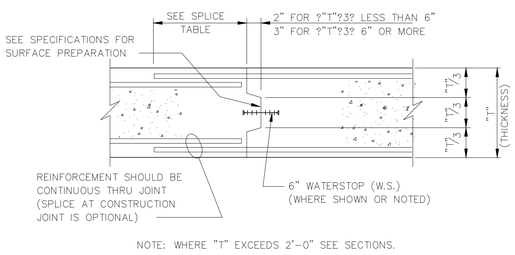

NOTE: WHERE "T" EXCEEDS 2'–0" SEE SECTIONS.

CONSTRUCTION JOINT DETAIL FOR WALLS AND SLABS

4

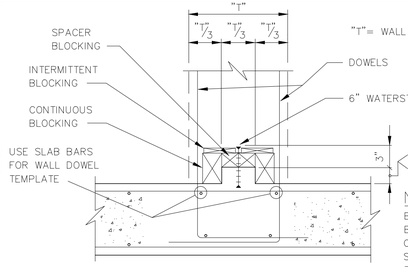

NOTES:

BLOCKING TO BE REMOVED BEFORE PLACING WALL CONCRETE, SEE SPECIFICATION FOR SURFACE PREPARATION

CONSTRUCTION JOINT WITH WATERSTOP IN WALL AT SLAB

5

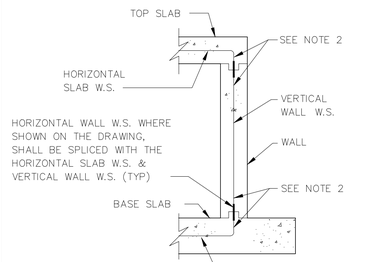

NOTES:

1. W.S. DENOTES WATERSTOP
2. SPLICE & EXTEND VERTICAL WALL W.S. 6" PAST HORIZONTAL WALL W.S. OR SPLICE WITH HORIZONTAL SLAB W.S. WHERE REQUIRED.
3. ALL WATERSTOPS SHALL BE CONTINUOUS. SHOP SPLICE AT ALL INTER–SECTIONS & FIELD SPLICE AT STRAIGHT RUNS ONLY.

WATERSTOP PLACING DETAIL

6

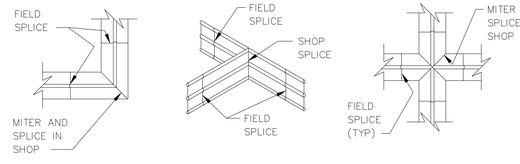

FLAT ELL VERTICAL TEE FLAT CROSS

FIELD SPLICES TO BE MADE IN STRICT ACCORDANCE W/MANUFACTURERS RECOMMENDATIONS.

WATERSTOP SPLICE DETAILS AT INTERSECTIONS

8

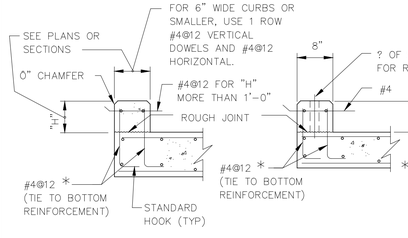

CURB WITHOUT HANDRAILS

CURB WITH HANDRAILS

* FOR NEW CURBS PLACED ON EXISTING SLABS, PROVIDE Ð" ö EXPANSION ANCHORS @12" O.C. (5" MIN. EMBEDMENT) AND #4 RE–BAR WITH THREADED END

CURB DETAILS

9

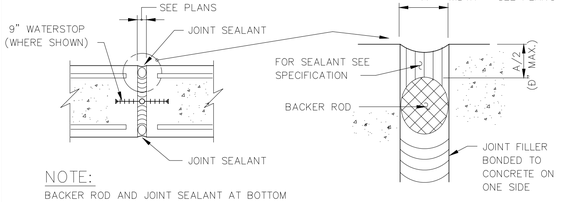

NOTE:

BACKER ROD AND JOINT SEALANT AT BOTTOM OF SLAB ON GRADE NOT REQUIRED.

EXPANSION JOINT DETAIL AT WALLS AND SLABS

10

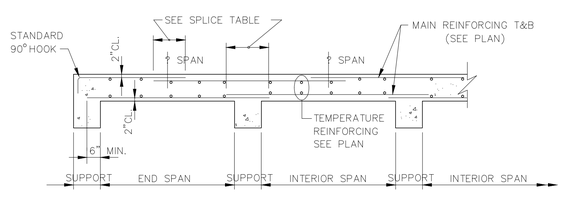

BAR PLACING DIAGRAM

PROVIDE BAR SUPPORTS PER ACI, SP–66 (88)
TYPICAL UNLESS OTHERWISE SHOWN OR NOTED

ONE–WAY FLOOR SLAB DETAILS
(FOR SLABS OVER 8" THICK)

11

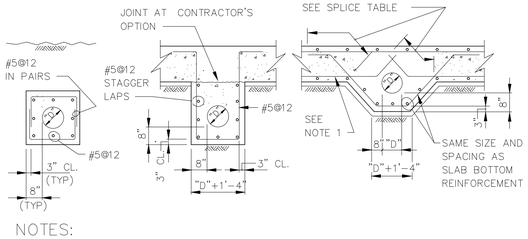

NOTES:

1. BOTTOM REINFORCEMENT TO BE CONTINUOUS WHERE POSSIBLE.
2. FOR PIPE SIZE "D" AND ELEVATION SEE MECHANICAL & PLUMBING DRAWINGS.
3. ALL PIPES LOCATED BENEATH BASE SLABS SHALL BE ENCASED IN CONCRETE, U.N.O.

PIPE ENCASEMENT DETAILS

12

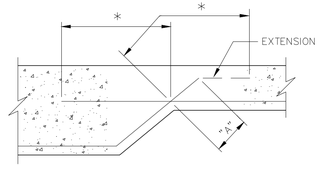

* – SEE SPLICE TABLE, EXTENSION SHOWN IS REQUIRED (12" MIN.) WHEN DIAGONAL LENGTH "A" IS LESS THAN SPLICE SHOWN IN SPLICE TABLE.

SPLICE LENGTH OF REINFORCEMENT INTERSECTING DIAGONALLY

RECORD DRAWING

THIS RECORD DRAWING IS NOT WARRANTED BUT IS BELIEVED TO REPRESENT CONDITIONS UPON COMPLETION OF CONSTRUCTION WITHIN REASONABLE TOLERANCES, BASED UPON THE INFORMATION FURNISHED TO THE ENGINEER PERTAINING TO CHANGES MADE DURING CONSTRUCTION.

13

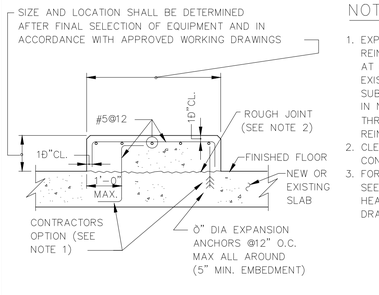

NOTES

1. EXPANSION ANCHORS WITH #5 REINFORCEMENT BAR (THREADED AT ONE END) SHALL BE USED IN EXISTING SLABS AND MAY BE SUBSTITUTED FOR #5@12 DOWELS IN NEW SLABS. DO NOT DRILL THROUGH EXISTING SLAB REINFORCEMENT.
2. CLEAN JOINT BEFORE PLACING CONCRETE FOR EQUIPMENT PAD.
3. FOR EQUIPMENT PADS NOT SHOWN SEE MECHANICAL, ELECTRICAL AND HEATING & VENTILATION DRAWINGS.

EQUIPMENT PAD DETAIL

14

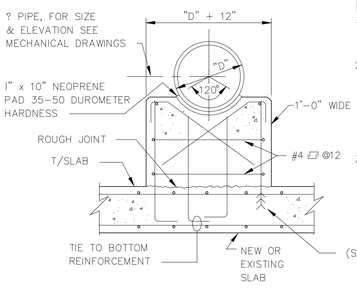

NOTES

1. ALL REINFORCEMENT #5@12 EACH FACE UNLESS NOTED OTHERWISE.
2. Ö" DIA EXPANSION ANCHORS (5" MIN EMBEDMENT) WITH #5 REINFORCEMENT BAR (THREADED AT ONE END) SHALL BE USED IN EXISTING SLABS. DO NOT DRILL THROUGH EXISTING SLAB REINFORCEMENT.
3. FOR LOCATION OF SADDLES SEE MECHANICAL DRAWINGS.

CONCRETE SADDLE DETAIL

15

GREELEY AND HANSEN
ENGINEERS
1715 NORTH WESTSHORE BOULEVARD
TAMPA, FLORIDA 33607–4135

DESIGNED	JEB
DRAWN	JVT
CHECKED	HT

APPROVED _____ DATE _____

_____ DATE _____

GREELEY AND HANSEN, ENGINEERS

NO.	DATE	APPD	REVISION
2	8/1/96		RECORD DWG REVISIONS

SCALE

NOT TO SCALE

CITY OF TAMPA, FLORIDA
HOOKERS POINT WASTEWATER TREATMENT PLANT
PLANT EXPANSION
PHASE I DIVISION 5H3B
STANDBY POWER AND SLUDGE STORAGE FACILITIES

STRUCTURAL
GENERAL
TYPICAL DETAILS

PROJ NO.	202G
DWG	AS1
SHEET	
DATE	DECEMBER 1991
REV	2

5H3B_0AS-001

FILE: H3B-AS01 SCALE: 1:1 09/05, 1996 at 08:24 – *13_64h (Hardware Lock)*

GRATING SCHEDULE	LL = 150 PSF MAX. DEFL. = SPAN/360			
SPAN	ALUMINUM (SERRATED)		STAINLESS STEEL OR GALVANIZED(SERRATED)	
	BRG. BARS 1" CLEAR	FRAME	BRG. BARS 1" CLEAR	FRAME
4'-0" OR LESS	1Ð X Ë	∠ 2X2X¼	1Ð X Ë	∠ 2X2X¼
4'-1" TO 5'-0"	2½ X Ë	∠ 2Ð2X¼	1Ð X Ë	∠ 2X2X¼
5'-1" TO 6'-0"	2Ð X Ë	∠ 3X2X¼	2 X Ë	∠ 2Ð2X¼
6'-1" TO 7'-0"*	3 X Ë	∠ 3Ð2Ð¼	2½ X Ë	∠ 2Ð2X¼
7'-1" TO 8'-0"*	3½ X ¼	∠ 3Ð2Ð¼	2Ð X ¼	∠ 3X2Ð¼

* HEAVY DUTY (NOT STANDARD)

NOTES:
1. FOR GRATING MATERIAL SEE PLAN OR SECTIONS.
2. SIZE OF GRATING AS SHOWN IN SCHEDULE UNLESS NOTED OTHERWISE ON PLAN.
3. ALL ALUMINUM SURFACES IN CONTACT WITH CONCRETE TO BE PAINTED, SEE SPECIFICATIONS.
4. ALL ANGLES, BARS & ANCHOR BOLTS TO BE OF THE SAME MATERIAL AS THE GRATING.
5. WHERE FRP GRATING IS REQUIRED USE SIMILAR DETAILS AS SHOWN & SEE SPECIFICATION'S.

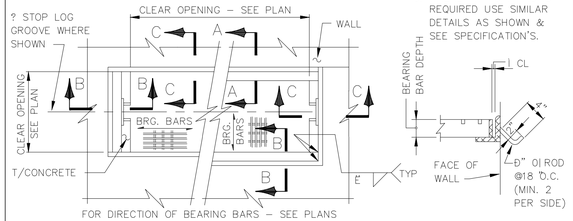

PLAN

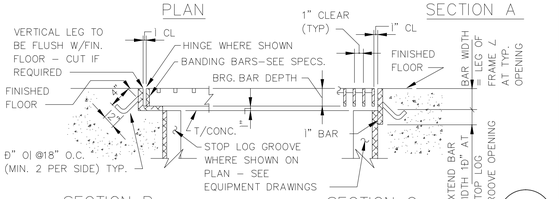

SECTION A

GRATING DETAILS

16

STIFFENER SCHEDULE	LL = 150 PSF MAX. DEFL. = SPAN/360
SPAN	FLAT BAR
1'–7" TO 4'–0"	¼" X 2"
4'–1" TO 5'–0"	¼" X 2Ð"
5'–1" TO 5'–8"	¼" X 3"
5'–9" TO 7'–4"	¼" X 3Ð"
7'–5" TO 8'–3"	½" X 3Ð"

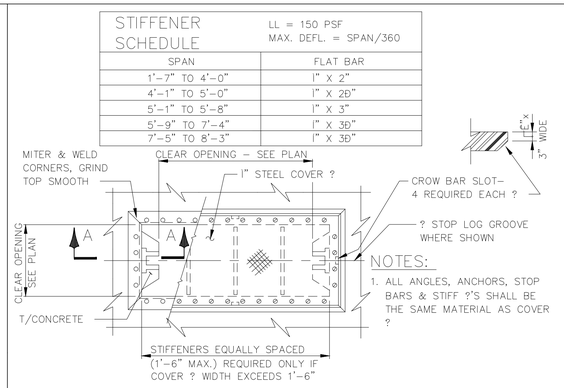

NOTES:
1. ALL ANGLES, ANCHORS, STOP BARS & STIFF ?'S SHALL BE THE SAME MATERIAL AS COVER ?

PLAN

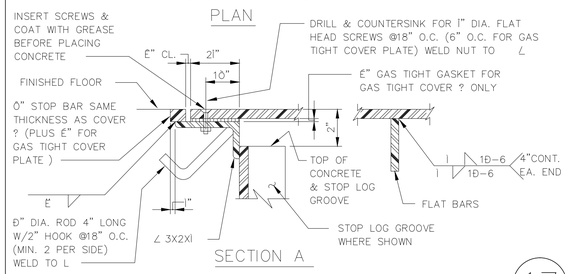

SECTION A

(COVER ? & COMPONENTS TO BE GALVINIZED)

STEEL COVER PLATE DETAILS

17

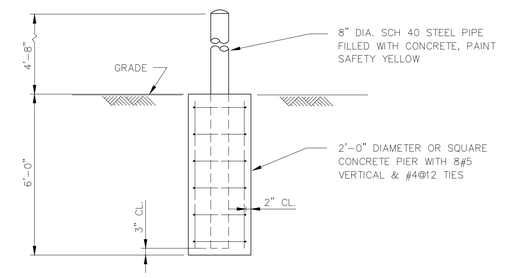

TRUCK BUMPER DETAIL

18

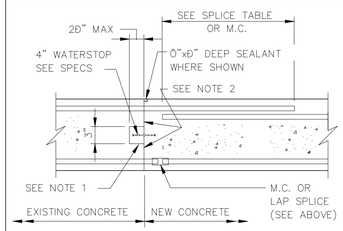

NOTE:
1. SAW CUT CONTINUOUS SLOT INTO EXISTING CONCRETE TAKING CARE NOT TO CUT EXISTING REINFORCEMENT. COAT ALL SURFACES WITH CEMENT–SAND (1:1) GROUT AND DRY PACK WITH NON–SHRINK GROUT AFTER PLACING WATER STOP.
2. ROUGHEN SURFACE AND COAT WITH CEMENT–SAND (1:1) GROUT BEFORE PLACING NEW CONCRETE.
3. M.C. DENOTES MECHANICAL CONNECTION, SEE SPECIFICATION.

CONSTRUCTION JOINT WITH WATERSTOP BETWEEN NEW AND EXISTING CONCRETE

20

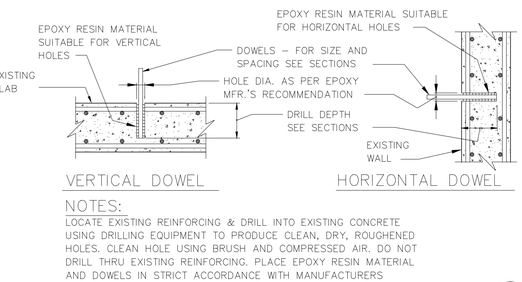

VERTICAL DOWEL

HORIZONTAL DOWEL

NOTES:
LOCATE EXISTING REINFORCING & DRILL INTO EXISTING CONCRETE USING DRILLING EQUIPMENT TO PRODUCE CLEAN, DRY, ROUGHENED HOLES. CLEAN HOLE USING BRUSH AND COMPRESSED AIR. DO NOT DRILL THRU EXISTING REINFORCING. PLACE EPOXY RESIN MATERIAL AND DOWELS IN STRICT ACCORDANCE WITH MANUFACTURERS RECOMMENDATIONS.

DOWEL GROUTING DETAIL

19

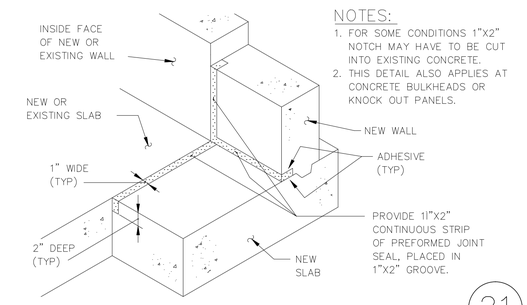

NOTES:
1. FOR SOME CONDITIONS 1"X2" NOTCH MAY HAVE TO BE CUT INTO EXISTING CONCRETE.
2. THIS DETAIL ALSO APPLIES AT CONCRETE BULKHEADS OR KNOCK OUT PANELS.

PREFORMED JOINT SEALANT DETAIL

21

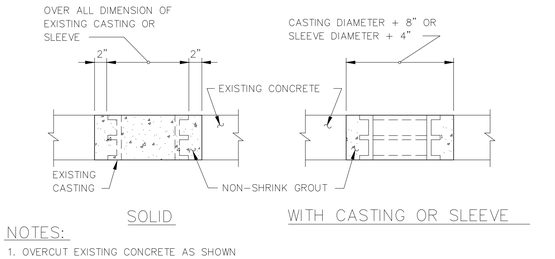

SOLID

WITH CASTING OR SLEEVE

NOTES:
1. OVERCUT EXISTING CONCRETE AS SHOWN
2. SAVE EXISTING REINFORCEMENT– CUT ONLY AS REQUIRED
3. ROUGHEN AND CLEAN SURFACES AND COAT WITH CEMENT–SAND (1:1) GROUT PRIOR TO PLACING NON–SHRINK GROUT

GROUT PLUG DETAIL

22

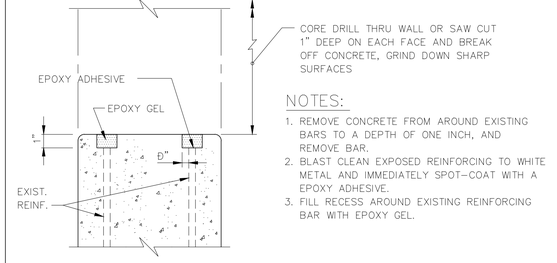

NOTES:
1. REMOVE CONCRETE FROM AROUND EXISTING BARS TO A DEPTH OF ONE INCH, AND REMOVE BAR.
2. BLAST CLEAN EXPOSED REINFORCING TO WHITE METAL AND IMMEDIATELY SPOT–COAT WITH A EPOXY ADHESIVE.
3. FILL RECESS AROUND EXISTING REINFORCING BAR WITH EPOXY GEL.

DETAIL FOR NEW OPENING IN EXISTING CONCRETE WALL (WET)

23

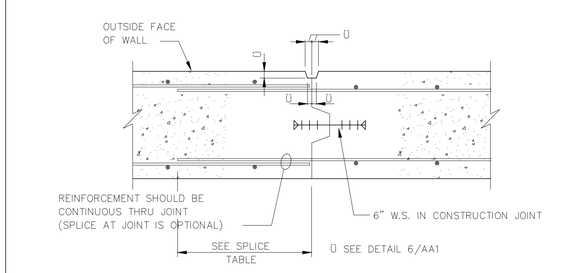

VERTICAL CONSTRUCTION JOINT DETAIL AT V–GROOVE

24

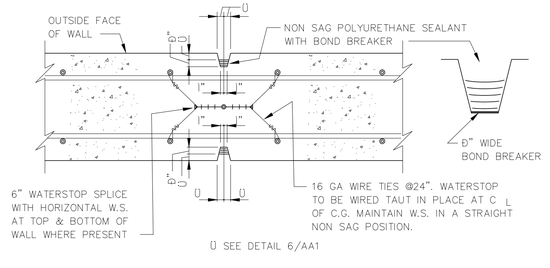

VERTICAL CONTROL GROOVE DETAIL AT V–GROOVE

25

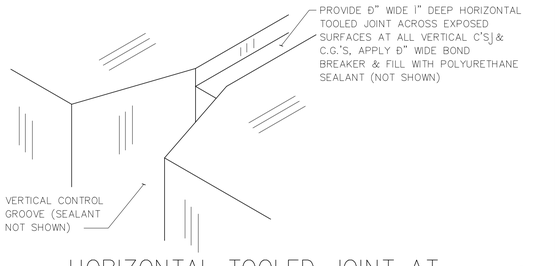

HORIZONTAL TOOLED JOINT AT VERTICAL C'JS & C.G.'S

26

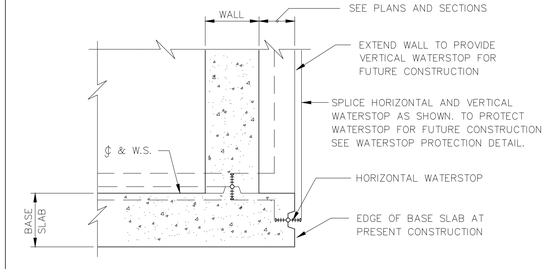

WATERSTOP FOR FUTURE CONSTRUCTION

27

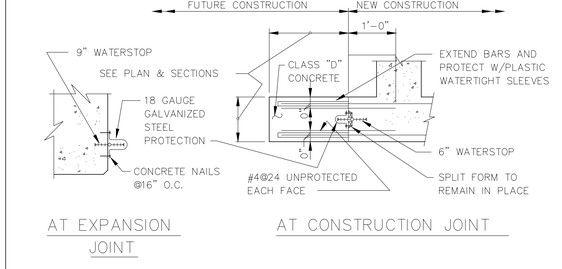

AT EXPANSION JOINT

AT CONSTRUCTION JOINT

WATERSTOP PROTECTION FOR FUTURE CONSTRUCTION

28

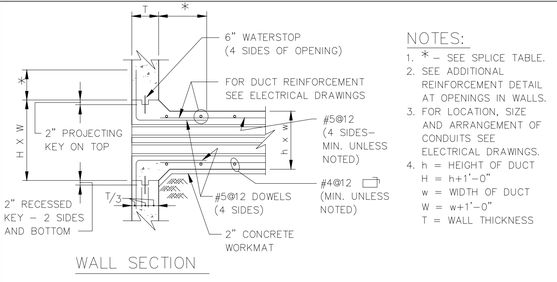

WALL SECTION

NOTES:
1. * – SEE SPLICE TABLE.
2. SEE ADDITIONAL REINFORCEMENT DETAIL AT OPENINGS IN WALLS.
3. FOR LOCATION, SIZE AND ARRANGEMENT OF CONDUITS SEE ELECTRICAL DRAWINGS.
4. h = HEIGHT OF DUCT
   H = h+1'–0"
   w = WIDTH OF DUCT
   W = w+1'–0"
   T = WALL THICKNESS

ELECTRICAL DUCT OPENING DETAIL

29

RECORD DRAWING
THIS RECORD DRAWING IS NOT WARRANTED BUT IS BELIEVED TO REPRESENT CONDITIONS UPON COMPLETION OF CONSTRUCTION WITHIN REASONABLE TOLERANCES, BASED UPON THE INFORMATION FURNISHED TO THE ENGINEER PERTAINING TO CHANGES MADE DURING CONSTRUCTION.

FILE: 5H4–AS02 1:1 04/23/98 16:41 GH–A

GREELEY AND HANSEN
ENGINEERS
1715 NORTH WESTSHORE BOULEVARD
TAMPA, FLORIDA 33607–4135

DESIGNED JEB
DRAWN JVT
CHECKED HT

APPROVED _____ DATE _____
_____ DATE _____
GREELEY AND HANSEN, ENGINEERS

NO.	DATE	APPD	REVISION
3	8/1/96		RECORD DWG REVISIONS

SCALE
NOT TO SCALE

CITY OF TAMPA, FLORIDA
HOOKERS POINT WASTEWATER TREATMENT PLANT
PLANT EXPANSION
PHASE I DIVISION 5H3B
STANDBY POWER AND SLUDGE STORAGE FACILITIES

GENERAL
STRUCTURAL
TYPICAL DETAILS AND GENERAL NOTES

PROJ NO. 202G
DWG AS2
SHEET
DATE DECEMBER 1991 REV 3

5H3B_0AS-002

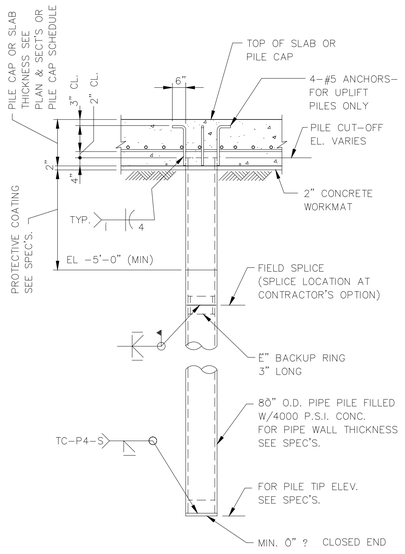

STEEL PIPE PILE

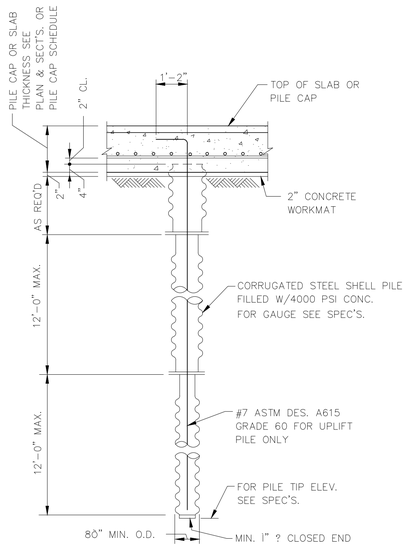

STEP TAPERED SHELL PILE

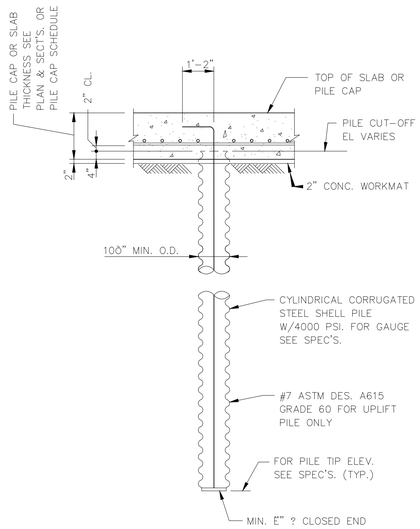

HEL-COR PILE

PILE DETAIL

PILE NOTES:

1. PILE CAPACITIES:
   - BEARING CAPACITY = 40 TONS
   - UPLIFT CAPACITY = 5 TONS
   - DOWNDRAG FROM SOIL = 10 TONS
   - NET DESIGN DOWNWARD CAPACITY = 30 TONS
2. FOR TEST PILE LOCATIONS, SEE PLANS.
3. COMPLETE PILE DRIVING RECORDS SHALL BE MADE BY THE PILE DRIVING CONTRACTOR AND SHALL BE SUBMITTED TO THE ENGINEER FOR APPROVAL. NO CONCRETE SHALL BE PLACED UNTIL SUCH APPROVAL HAS BEEN OBTAINED.

30

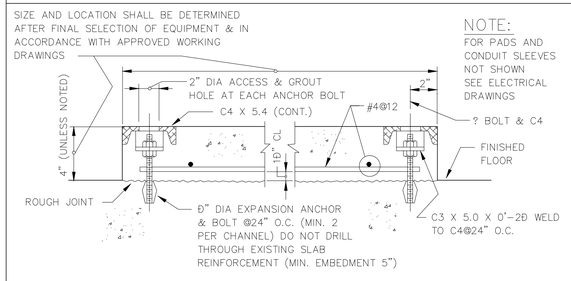

ELECTRICAL EQUIPMENT PAD DETAIL

31

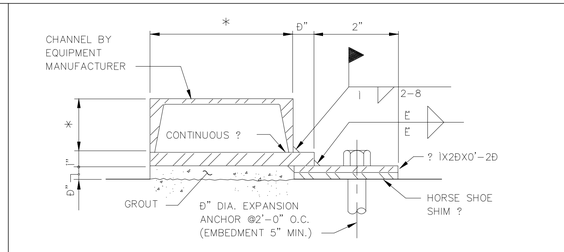

* DIMENSIONS TO BE DETERMINED BY EQUIPMENT MANUFACTURER.

FLOOR MOUNTING FOR ELECTRICAL EQUIPMENT

32

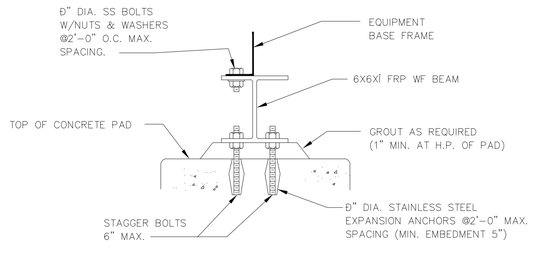

BASE FRAME SUPPORT FOR OUTDOOR SUBSTATION TRANSFORMERS

33

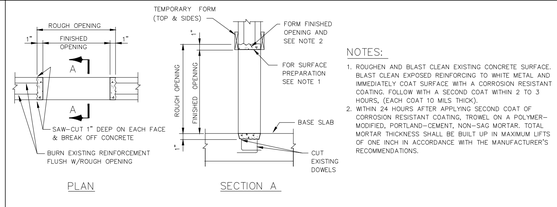

NOTES:

1. ROUGHEN AND BLAST CLEAN EXISTING CONCRETE SURFACE. BLAST CLEAN EXPOSED REINFORCING TO WHITE METAL AND IMMEDIATELY COAT SURFACE WITH A CORROSION RESISTANT COATING. FOLLOW WITH A SECOND COAT WITHIN 2 TO 3 HOURS, (EACH COAT 10 MILS THICK).
2. WITHIN 24 HOURS AFTER APPLYING SECOND COAT OF CORROSION RESISTANT COATING, TROWEL ON A POLYMER-MODIFIED, PORTLAND-CEMENT, NON-SAG MORTAR. TOTAL MORTAR THICKNESS SHALL BE BUILT UP IN MAXIMUM LIFTS OF ONE INCH IN ACCORDANCE WITH THE MANUFACTURER'S RECOMMENDATIONS.

DETAIL FOR NEW OPENING IN EXISTING CONCRETE WALL (DRY)

RECORD DRAWING

THIS RECORD DRAWING IS NOT WARRANTED BUT IS BELIEVED TO REPRESENT CONDITIONS UPON COMPLETION OF CONSTRUCTION WITHIN REASONABLE TOLERANCES, BASED UPON THE INFORMATION FURNISHED TO THE ENGINEER PERTAINING TO CHANGES MADE DURING CONSTRUCTION.

34

GENERAL STRUCTURAL NOTES

THE FOLLOWING GENERAL NOTES ARE SHOWN FOR CONVENIENCE AND ARE SUPPLEMENTAL TO THE SPECIFICATIONS:

1. ALL SECTIONS, DETAILS AND NOTES ARE INTENDED TO BE TYPICAL UNLESS OTHERWISE INDICATED. WORKING DRAWINGS PREPARED BY THE CONTRACTOR SHALL SHOW THE APPLICATION OF TYPICAL SECTIONS AND DETAILS FOR SIMILAR SITUATIONS.
2. EXPOSED CORNERS SHALL HAVE A Ó" CHAMFER AND RE-ENTRANT CORNERS SHALL HAVE A Ó" FLAT FILLET UNLESS OTHERWISE NOTED.
3. THE USE OF CONSTRUCTION JOINTS AT LOCATIONS NOT SHOWN ON DRAWINGS SHALL REQUIRE APPROVAL BY THE ENGINEER.
4. VERIFY LOCATIONS OF ALL OPENING'S, EMBEDDED ITEMS AND CONCRETE CONFIGURATIONS WITH DRAWING'S AND SPECIFICATION'S FROM ALL OTHER DISIPLINES. ALL THESE ITEMS SHALL BE SHOWN AND LOCATED ON APPROVED WORKING (SHOP) DRAWING'S.
5. BACKFILL SHALL NOT BE PLACED AGAINST SUBSTRUCTURE WALLS UNTIL FLOOR SLABS SUPPORTING TOP AND BOTTOM OF THE WALLS HAVE ATTAINED A COMPRESSIVE STRENGTH OF 3,000 PSI AS INDICATED BY CYLINDER TESTING. BACKFILL SHALL BE PLACED EVENLY AGAINST EACH SIDE OF SUBSTRUCTURES TO PRODUCE EQUAL AND OPPOSITE LATERAL PRESSURES. THE DIFFERENCE IN ELEVATION SHALL NOT EXCEED 1-FOOT.
6. COMPRESSIVE STRENGTH OF CONCRETE: ALL CAST-IN-PLACE CONCRETE (EXCEPT CONCRETE WORKMATS) F'c = 4,000 PSI AT 28 DAYS. CONCRETE WORKMATS F'c = 2,000 PSI AT 28 DAYS.
7. ALL REINFORCING STEEL SHALL BE ASTM A615, GRADE 60 AND SHALL BE DETAILED ACCORDING TO THE ACI DETAILING MANUAL 1988 PUBLICATION SP-66.
8. CONCRETE PROTECTION FOR REINFORCEMENT SHALL BE AS FOLLOWS, UNLESS OTHERWISE INDICATED ON THE PLANS OR ORDERED BY THE ENGINEER.

SLABS
- A) FOR DRY CONDITIONS:
  - a) SLABS 8" THICK OR LESS . . . . . 1"
  - b) SLABS OVER 8" THICK . . . . . 2"
- B) EXPOSED TO EARTH, WATER OR WEATHER AND FOR BOTTOMS BEARING ON WORKMATS . . . . . 2"

BEAMS AND COLUMNS
- A) FOR DRY CONDITIONS:
  - a) STIRRUPS AND TIES . . . . . 1Ð"
  - b) PRINCIPAL REINFORCEMENT . . . . . 2"
- B) EXPOSED TO EARTH, WATER OR WEATHER:
  - a) STIRRUPS AND TIES . . . . . 2"
  - b) PRINCIPAL REINFORCEMENT . . . . . 2Ð"

WALLS
- A) FOR DRY CONDITIONS:
  - a) WALLS 8" THICK OR LESS . . . . . 1"
  - b) WALLS OVER 8" THICK . . . . . 2"
- B) EXPOSED TO EARTH, WATER OR WEATHER:
  - a) CIRCULAR TANKS WITH RING TENSION . . . . . 2Ð"
  - b) ALL OTHERS . . . . . 2"

FOOTINGS AND BASE SLABS
- A) TOP OF FOOTING OR BASE SLAB . . . . . 2"
- B) ALL FORMED SIDES AND ENDS, AND BOTTOMS BEARING ON CONCRETE WORKMAT . . . . . 2"
- C) AT UNFORMED SIDES AND ENDS, AND BOTTOMS IN CONTACT WITH EARTH . . . . . 3"
- D) OVER TOP OF PILES . . . . . 2"

9. STRUCTURAL STEEL SHALL BE DETAILED, FABRICATED AND ERECTED IN ACCORDANCE WITH THE AISC SPECIFICATION FOR STRUCTURAL STEEL BUILDINGS, ALLOWABLE STRESS DESIGN AND PLASTIC DESIGN, JUNE 1, 1989 AND CONFORM TO ASTM A36 UNLESS OTHERWISE SHOWN OR SPECIFIED. BOLTS SHALL BE Ó" DIAMETER, HIGH STRENGTH BOLTS CONFORMING TO ASTM A325 IN SLIP CRITICAL CONNECTIONS, UNLESS NOTED OTHERWISE. ELECTRODES FOR WELDING SHALL BE E70XX COMPLYING WITH AWS D1.1, DESIGN OF NEW BUILDINGS (SECTION 8).
10. ALL ABBREVIATIONS SHOWN ON DRAWINGS CONFORM TO ANSI / ASME - Y1.1-1989. THE FOLLOWING LEGEND SHOWS ABBREVIATIONS AND SYMBOLS COMMONLY USED IN THE STRUCTURAL DETAILING AND CONSTRUCTION INDUSTRY:

LEGEND:

℄	CONSTRUCTION JOINT	L	ANGLE
W.S.	WATERSTOP	?	PLATE
EXP. JT.	EXPANSION JOINT	A.B.	ANCHOR BOLT
C.G.	CONTROL GROOVE	S.S.	STAINLESS STEEL
H.P.	HIGH POINT	F.R.P.	FIBERGLASS REINFORCED PLASTIC
L.P.	LOW POINT	M.C.	MECHANICAL CONNECTIONS
W.P.	WORK POINT	N.T.S.	NOT TO SCALE
E.P.	EQUIPMENT PAD	U.N.O.	UNLESS NOTED OTHERWISE
E.E.P.	ELECTRICAL EQUIPMENT PAD	*	DIMENSIONS OR ELEVATION TO BE DETERMINED OR VERIFIED AFTER FINAL SELECTION OF EQUIPMENT
P.S.	PIPE SUPPORT		
?	CENTER LINE		
C/C	CENTER TO CENTER		
O.C.	ON CENTER		

GREELEY AND HANSEN
ENGINEERS
1715 NORTH WESTSHORE BOULEVARD
TAMPA, FLORIDA 33607-4135

DESIGNED JEB
DRAWN JVT
CHECKED HT

APPROVED _____ DATE _____
_____ DATE _____
GREELEY AND HANSEN, ENGINEERS

NO.	DATE	APPD	REVISION
4	8/1/96		RECORD DWG REVISIONS

SCALE: NOT TO SCALE

CITY OF TAMPA, FLORIDA
HOOKERS POINT WASTEWATER TREATMENT PLANT
PLANT EXPANSION
PHASE I DIVISION 5H3B
STANDBY POWER AND SLUDGE STORAGE FACILITIES

GENERAL
STRUCTURAL
TYPICAL DETAILS AND GENERAL NOTES

PROJ NO. 202G
DWG AS3
SHEET
DATE DECEMBER 1991 REV 4

FILE: H3B-AS02 SCALE: 1:1 09/09, 1996 at 13:28 - *13_cdn (Hardware Lock)*

5H3B_0AS-003

VALVE SYMBOLS

DESCRIPTION	SCHEMATIC	THREE LINE	SINGLE LINE
GATE			
BUTTERFLY			
PLUG			
CHECK (SWING)			
CONE			
BALL			
DIAPHRAGM			
GLOBE			
ANGLE			
THREE WAY			
FOUR WAY			
FLAP			
PRESSURE RELIEF			
AUTO AIR AND VACUUM RELEASE			
AUTO AIR RELEASE			
AUTO VACUUM RELEASE			
PRESSURE REDUCING			
HOSE			
STOP AND DRAIN			

PIPE FITTINGS

DESCRIPTION	SCHEMATIC	THREE LINE	SINGLE LINE
CROSS	NA		
CROSS	NA		
TEE	NA		
TEE	NA		
TEE	NA		
SIDE OUTLET TEE	NA		
SIDE OUTLET TEE	NA		
LATERAL	NA		
90? ELBOW	NA		
90? ELBOW	NA		
90? ELBOW	NA		
90? ELBOW (LONG RADIUS)	NA		
45? ELBOW	NA		
45? ELBOW	NA		
45? ELBOW	NA		
45? ELBOW (LONG RADIUS)	NA		
SIDE OUTLET ELBOW	NA		
SIDE OUTLET ELBOW	NA		
BASE ELBOW	NA		

PIPE FITTINGS

DESCRIPTION	SCHEMATIC	THREE LINE	SINGLE LINE
UNION (SCREWED)			
REDUCER			
REDUCER – ECCENTRIC (OFFSET VIEW)	NA		
BLIND FLANGE			
SLEEVE TYPE COUPLING			
SLEEVE TYPE COUPLING (HARNESSED)			
GROOVED TYPE COUPLING			
EXPANSION JOINT RUBBER BELLOWS TYPE			
EXPANSION JOINT METAL BELLOWS TYPE			
VENTURI METER			
METER			
STRAINER			
DUPLEX STRAINER			
LUBE OIL FILTER		NA	
MOISTURE SEPARATOR		NA	
SCALE TRAP		NA	
FLAME TRAP			
VENT			
THERMOSTAT (TEMPERATURE REGULATOR)			
PRESSURE GAUGE			
THERMOMETER			
WATER LEVEL ALARM			
DIFFERENTIAL PRESSURE GAUGE			

PIPE JOINTS

DESCRIPTION	SCHEMATIC	THREE LINE	SINGLE LINE
FLANGE	NA		
MECHANICAL JOINT	NA		
MECHANICAL JOINT (RESTRAINED)	NA		
PUSH ON OR BELL AND SPIGOT	NA		
WELDED	NA		NA
SCREWED	NA		
JOINT IN CONCRETE PIPE	NA		NA

WALL FITTINGS

DESCRIPTION	SCHEMATIC	THREE LINE	SINGLE LINE
WALL SLEEVE (CAULKED)	NA		
WALL SLEEVE (ANNULAR TYPE SEAL)	NA		
WALL SLEEVE (MECHANICAL JOINT)	NA		
FLANGE AND FLANGE WALL PIPE WITH INTERMEDIATE COLLAR (F x F x F)	NA		
BELL AND BELL WALL PIPE WITH INTERMEDIATE COLLAR (B x F x B)	NA		
MECHANICAL JOINT AND MECHANICAL JOINT WALL PIPE WITH INTERMEDIATE COLLAR (MJ x F x MJ)	NA		
BELL AND FLANGE WALL PIPE WITH INTERMEDIATE COLLAR (B x F x F)	NA		
MECHANICAL JOINT AND FLANGE WALL PIPE WITH INTERMEDIATE COLLAR (MJ x F x F)	NA		
STEEL WALL RING FOR MECHANICAL JOINT AND CONCRETE PIPE (RUBBER AND STEEL)	NA		NA

OPERATOR

DESCRIPTION	SCHEMATIC	DESCRIPTION	SINGLE LINE
HYDRAULIC CYLINDER	H	MANUAL	NONE
PNEUMATIC CYLINDER	P	CHAINWHEEL	C
DIAPHRAGM	D	NUT	N
FLOAT	F	SOLENOID	S
MOTOR (ELECTRIC)	M	AIR MOTOR	A
GEAR	G		

NOTES:
1. THIS IS A GENERAL LEGEND PROVIDED TO FACILITATE USE OF THE PLANS. REFER TO THE PLANS AND SPECIFICATIONS FOR ITEMS REQUIRED.
2. VALVES AND PIPE FITTINGS ARE SHOWN WITH FLANGED JOINTS. ITEMS ARE AVAILABLE WITH VARIOUS JOINTS AND ARE SHOWN AS REQUIRED.
3. NA MEANS NOT APPLICABLE.

RECORD DRAWING

THIS RECORD DRAWING IS NOT WARRANTED BUT IS BELIEVED TO REPRESENT CONDITIONS UPON COMPLETION OF CONSTRUCTION WITHIN REASONABLE TOLERANCES, BASED UPON THE INFORMATION FURNISHED TO THE ENGINEER PERTAINING TO CHANGES MADE DURING CONSTRUCTION.

GREELEY AND HANSEN
ENGINEERS
1715 NORTH WESTSHORE BOULEVARD
TAMPA, FLORIDA 33607-4135

DESIGNED LCC
DRAWN ROO
CHECKED DCH

APPROVED _____ DATE _____
_____ DATE _____
GREELEY AND HANSEN, ENGINEERS

NO.	DATE	APPD	REVISION
	7/31/96		RECORD DWG REVISIONS

SCALE
NO SCALE

CITY OF TAMPA, FLORIDA
HOOKERS POINT WASTEWATER TREATMENT PLANT
PLANT EXPANSION
PHASE I DIVISION 5H3B
STANDBY POWER AND SLUDGE STORAGE FACILITIES

MECHANICAL

PIPING SYMBOLS AND NOTES

PROJ NO. 202G
DWG AM1
SHEET
DATE DECEMBER 1991 REV 0

5H3B_0AM-001

FILE: H3B-AM01 SCALE: 1:1 09/10, 1996 at 07:60 — *13_c4h (Hardware Lock)*

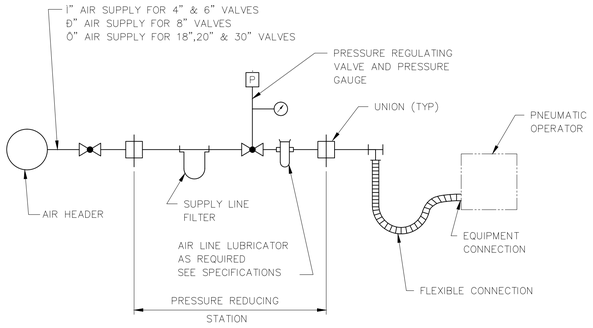

AIR SUPPLY PIPING TO PNEUMATIC OPERATOR DIAGRAM

NOT TO SCALE

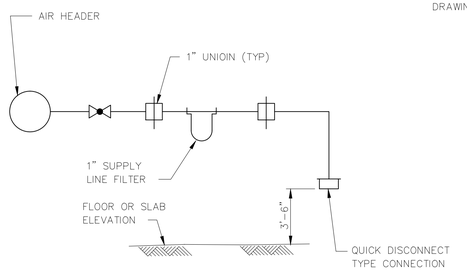

TYPICAL PLANT AIR HOSE VALVE CONNECTION DIAGRAM

NOT TO SCALE

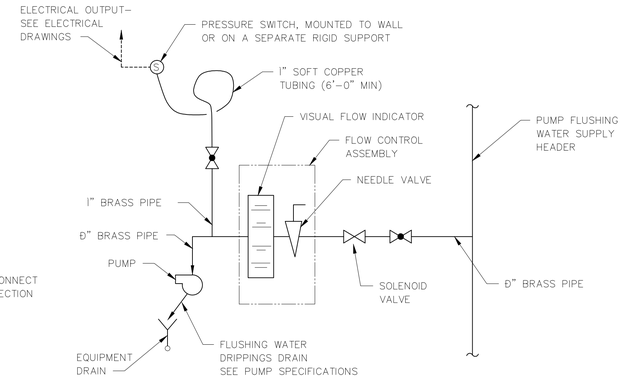

PUMP FLUSHING WATER DIAGRAM

NOT TO SCALE

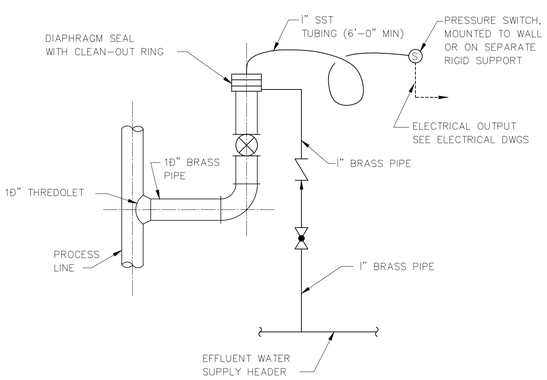

TYPICAL PUMP DISCHARGE PRESSURE SWITCH AND PURGE WATER DETAIL

NOT TO SCALE

HARNESS SLEEVE TYPE COUPLING JOINT FOR STEEL PIPE – SCHEDULE

NOM. PIPE SIZE	MAX. PRESS. (1)	MIDDLE RING		TIE RODS				HARNESS LUG										SERVICE
		LG	THKNS	NO.	DIA.	X	L	D	A	W	Z	T	E	H	H1	HOLE DIA.	WELD SIZE	
4	100	5	Í	2	Ò	1–Ê	22–Í	6–Ð	3	1–Ð	2–Ö	Í	3	3–Ö	2	Ô	Í	ROOF DRAINS ⚠1
6	100	5	Í	2	Ò	1–Ê	22–Í	6–Ð	3	1–Ð	2–Ö	Í	3	3–Ö	2	Ô	Í	THICKENED WASTE ACTIVATED SLUDGE
8	125	7	Í	2	Ò	1–Ê	26–Í	8–Ð	3	1–Ð	2–Ö	Í	3	3–Ö	2	Ô	Í	SLUDGE FEED, CHLORINE SOLUTION
12	25	7	Í	2	Ò	1–Ê	26–Í	8–Ð	3	1–Ð	2–Ö	Í	3	3–Ö	2	Ô	Í	SLUDGE FEED SUCTION

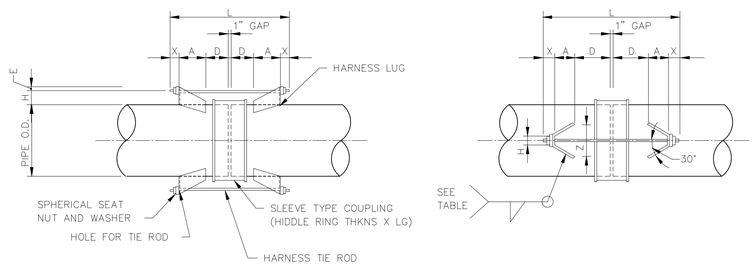

HARNESSED SLEEVE TYPE COUPLING DETAIL

NOT TO SCALE

RECORD DRAWING

THIS RECORD DRAWING IS NOT WARRANTED BUT IS BELIEVED TO REPRESENT CONDITIONS UPON COMPLETION OF CONSTRUCTION WITHIN REASONABLE TOLERANCES, BASED UPON THE INFORMATION FURNISHED TO THE ENGINEER PERTAINING TO CHANGES MADE DURING CONSTRUCTION.

FILE: H3B-AM02 SCALE: 1:1 09/10, 1996 at 08:16 — "15_x4h (Hardware Lock)"

GREELEY AND HANSEN
ENGINEERS
1715 NORTH WESTSHORE BOULEVARD
TAMPA, FLORIDA 33607–4135

DESIGNED LCC
DRAWN MSB
CHECKED DCH

APPROVED _____ DATE _____
_____ DATE _____
GREELEY AND HANSEN, ENGINEERS

NO.	DATE	APPD	REVISION
2	7/31/96		RECORD DWG REVISIONS

SCALE
NO SCALE

CITY OF TAMPA, FLORIDA
HOOKERS POINT WASTEWATER TREATMENT PLANT
PLANT EXPANSION
PHASE I DIVISION 5H3B
STANDBY POWER AND SLUDGE STORAGE FACILITIES

GENERAL
MECHANICAL
PIPING DETAILS

PROJ NO. 202G
DWG AM2
SHEET
DATE DECEMBER 1991 REV 2

5H3B_0AM-002

INSTRUMENT TAG

	FIRST LETTER		SUCCEEDING LETTERS		
	MEASURED OR INITIATING VARIABLE	MODIFIER	READOUT OR PASSIVE FUNCTION	OUTPUT FUNCTION	MODIFIER
A	ANALYSIS (NOTE 1)		ALARM		
B	BURNER FLAME				
C	CONDUCTIVITY			CONTROL	
D	DENSITY OR SP. GRAV.	DIFFERENTIAL			
E	VOLTAGE		PRIMARY ELEMENT		
F	FLOW	RATIO			
G			GLASS OR GAUGE		
H	HAND (MANUAL)				HIGH
I	CURRENT		INDICATE		
J	POWER	SCAN			
K	TIME OR SCHEDULE			CONTROL STATION	
L	LEVEL		LIGHT (PILOT)		LOW
M		MOMENTARY			MIDDLE
N					
O					
P	PRESSURE OR VACUUM				
Q	QUANTITY OR EVENT	TOTALIZE			
R	RADIO ACTIVITY		RECORD OR PRINT		
S	SPEED			SWITCH	
T	TEMPERATURE			TRANSMIT	
U	MULTIVARIABLE		MULTIFUNCTION		
V				VALVE	
W	WEIGHT OR FORCE				
X	UNCLASSIFIED	(NOTE 3)	UNCLASSIFIED		
Y				RELAY OR COMPUTE (NOTE 4)	
Z	POSITION				

NOTES:

1. COVERS ALL ANALYSIS NOT LISTED IN TABLE. TYPE OF ANALYSIS WILL BE DEFINED OUTSIDE TAGGING BALLOON ON DIAGRAM.
2. SUFFIX USUALLY NOT NEEDED. USED ONLY FOR MORE THAN ONE INSTRUMENT WITH THE SAME LETTER IDENTIFICATION AND LOOP NUMBER.
3. INTENDED TO COVER UNLISTED MEANINGS THAT WILL BE USED TO A LIMITED EXTENT. MEANINGS WILL BE DEFINED OUTSIDE TAGGING BALLOON ON DIAGRAM.
4. FUNCTION OF COMPUTING DEVICE WILL BE DEFINED OUTSIDE TAGGING BALLOON. SEE ABBREVIATION FOR DESIGNATION.
5. INTERLOCK DESCRIBED EITHER ON DRAWING OR IN SPECIFICATIONS.

INSTRUMENT SYMBOLS

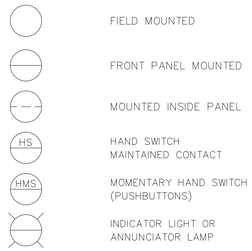

FIELD MOUNTED

FRONT PANEL MOUNTED

MOUNTED INSIDE PANEL

HAND SWITCH MAINTAINED CONTACT

MOMENTARY HAND SWITCH (PUSHBUTTONS)

INDICATOR LIGHT OR ANNUNCIATOR LAMP

MISC. SYMBOLS

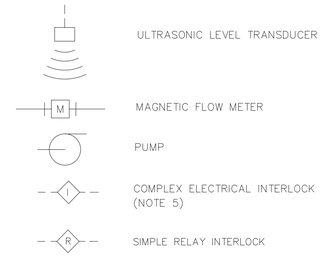

ULTRASONIC LEVEL TRANSDUCER

MAGNETIC FLOW METER

PUMP

COMPLEX ELECTRICAL INTERLOCK (NOTE 5)

SIMPLE RELAY INTERLOCK

LINE SYMBOLS

PROCESS

ELECTRIC SIGNAL

PNEUMATIC SIGNAL

COMPUTER I/O

ANALOG INPUT TO RTU

DISCRETE INPUT TO RTU

ANALOG OUTPUT FROM RTU

DISCRETE OUTPUT FROM RTU

ABBREVIATIONS

I/I	CURRENT TO CURRENT ISOLATOR
RTU	REMOTE TERMINAL UNIT FOR COMPUTER SYSTEM
Σ	SUMMATOR (+) ADDITIVE (–) SUBTRACTIVE
>	HIGH SIGNAL SELECTOR
POT/I	POTENTIOMETER TO CURRENT CONVERTER
CBCP	CONTROL BUILDING CONTROL PANEL
PSP	POLYMER SYSTEM PANEL
PFPCP	POLYMER FEED PUMP CONTROL PANEL
STPCP	SLUDGE TRANSFER PUMP CONTROL PANEL

RECORD DRAWING

THIS RECORD DRAWING IS NOT WARRANTED BUT IS BELIEVED TO REPRESENT CONDITIONS UPON COMPLETION OF CONSTRUCTION WITHIN REASONABLE TOLERANCES, BASED UPON THE INFORMATION FURNISHED TO THE ENGINEER PERTAINING TO CHANGES MADE DURING CONSTRUCTION.

GREELEY AND HANSEN
ENGINEERS
1715 NORTH WESTSHORE BOULEVARD
TAMPA, FLORIDA 33607–4135

DESIGNED TRG
DRAWN TK
CHECKED JRP

APPROVED _____ DATE _____
_____ DATE _____
GREELEY AND HANSEN, ENGINEERS

NO.	DATE	APPD	REVISION
2	7/31/96		RECORD DWG REVISIONS

SCALE
NO SCALE

CITY OF TAMPA, FLORIDA
HOOKERS POINT WASTEWATER TREATMENT PLANT
PLANT EXPANSION
PHASE I DIVISION 5H3B
STANDBY POWER AND SLUDGE STORAGE FACILITIES

GENERAL
INSTRUMENTATION
LEGENDS AND ABBREVIATIONS

PROJ NO. 202G
DWG AI1
SHEET
DATE DECEMBER 1991 REV 2

5H3B_0AI-001

FILE: H3B-A01 SCALE: 1:1 09/11, 1998 at 10:09 - *13_c4h (Hardware Lock)*

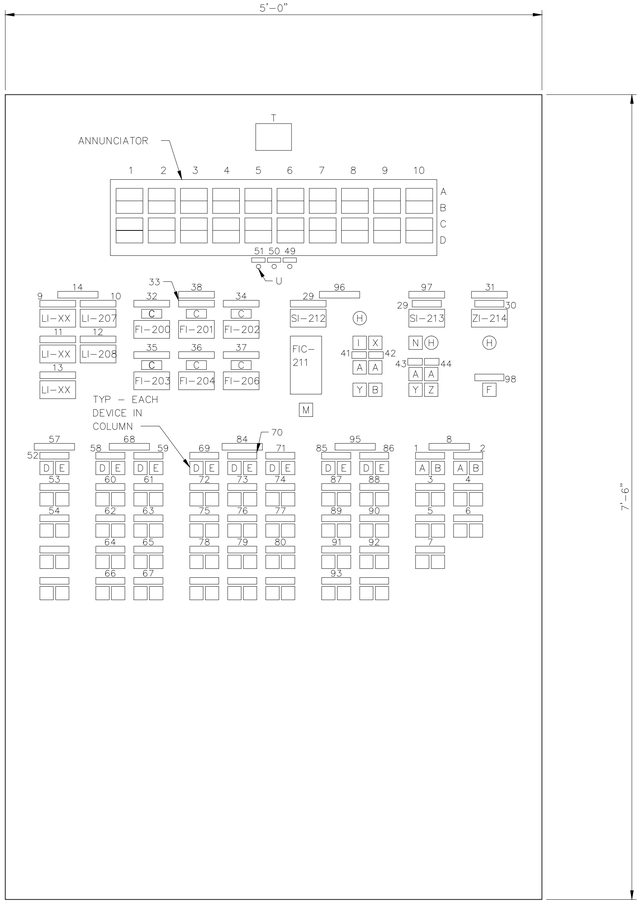

PANEL DEPTH = 2'-6"

CONTROL BUILDING CONTROL PANEL (CBCP)

SCALE: 1Ð"=1'-0"

NAMEPLATE LEGEND

ITEM	DEVICE DESCRIPTION
1	CB-SM-1
2	CB-SM-2
3	CB-SM-3
4	CB-SM-4A
5	CB-SM-4B
6	CB-SM-5A
7	CB-SM-5B
8	SLUDGE MIXERS
9	CB-SST-1
10	CB-SST-2
11	CB-SST-3
12	CB-SST-4
13	CB-SST-5
14	SLUDGE STORAGE TANK LEVEL - FEET
15	(SPARE)
16	(SPARE)
17	(SPARE)
18	(SPARE)
19	(SPARE)
20	(SPARE)
21	(SPARE)
22	(SPARE)
23	(SPARE)
24	(SPARE)
25	(SPARE)
26	(SPARE)
27	(SPARE)
29	RPM
30	% OPENING
31	GRAVITY FLOW RATE CONTROL - THROTTLING VALVE CB-S-040
32	FE-200 : CB-STP-1/2 CONTROL : TO SLUDGE DRYING BEDS
33	FE-201 : CB-STP-1/2 CONTROL : TO STORAGE TANKS-1/2/3
34	FE-202 : CB-STP-1/2 CONTROL : TO STORAGE TANKS-1/2/3
35	FE-203 : CB-STP-1/2 CONTROL : TO STORAGE TANKS-4/5
36	FE-204 : INCOMING SLUDGE TO STORAGE TANKS-4/5
37	FE-206 : POLYMER FEED PUMP DISCHARGE
38	FLOWMETERS
39	(SPARE)
40	(SPARE)
41	SLUDGE TRANSFER PUMP CB-STP-1
42	SLUDGE TRANSFER PUMP CB-STP-2
43	POLYMER FEED PUMP CB-PFP-1
44	POLYMER FEED PUMP CB-PFP-2
45	(SPARE)
46	(SPARE)
48	(SPARE)
49	RESET
50	ACKNOWLEDGE
51	ANNUNCIATOR TEST
52	CB-S-001
53	CB-S-002
54	CB-S-003
55	CB-S-026
56	SPARE
57	INCOMING SLUDGE VALVES
58	CB-S-004
59	CB-S-005
60	CB-S-006
61	CB-S-007
62	CB-S-008
63	CB-S-009
64	CB-S-010
65	CB-S-011
66	CB-S-012
67	CB-S-013
68	SLUDGE STORAGE TANK INLET VALVES
69	CB-S-014
70	CB-S-015
71	CB-S-016
72	CB-S-017
73	CB-S-018
74	CB-S-019
75	CB-S-020
76	CB-S-021
77	CB-S-022
78	CB-S-023
79	CB-S-024
80	CB-S-025
81	SPARE
82	SPARE
83	SPARE
84	SLUDGE STORAGE TANK OUTLET VALVES
85	CB-S-027
86	CB-S-028
87	CB-S-029
88	CB-S-030
89	CB-S-031
90	CB-S-032
91	CB-S-033
92	CB-S-034
93	CB-S-035
94	CB-S-036
95	SLUDGE TRANSFER VALVES
96	SLUDGE TRANSFER PUMPS
97	POLYMER FEED PUMPS
98	FACILITY MASTER OPERATING MODE

PANEL LEGEND

ITEM	DEVICE DESCRIPTION
A	DUAL INDICATING LIGHT - RUN (RED) / OFF (GREEN)
B	DUAL PUSHBUTTON - START / STOP
C	FLOW TOTALIZER
D	DUAL INDICATING LIGHT - OPEN (RED) / CLOSED (GREEN)
E	DUAL PUSHBUTTON - OPEN / CLOSE
F	SELECTOR SWITCH - LOCAL/COMPUTER
H	RATIO POTENTIOMETER
I	SELECTOR SWITCH - MANUAL / AUTO
M	SELECTOR SWITCH - FE-200 / FE-201 / FE-202 / FE-203
N	DUAL INDICATING LIGHT - PFPCP / CBCP
T	HORN
U	PUSHBUTTON
X	DUAL INDICATING LIGHT - STPCP / CBCP
Y	DUTY TRANSFER SWITCH - PUMP 1 / PUMP 2
Z	SELECTOR SWITCH - ON / OFF

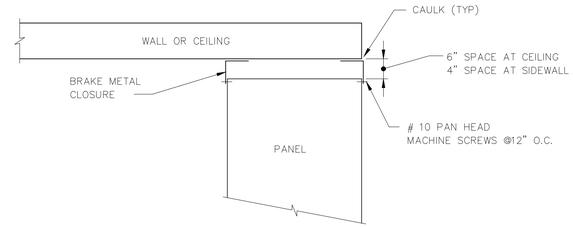

TRIM DETAIL

NO SCALE

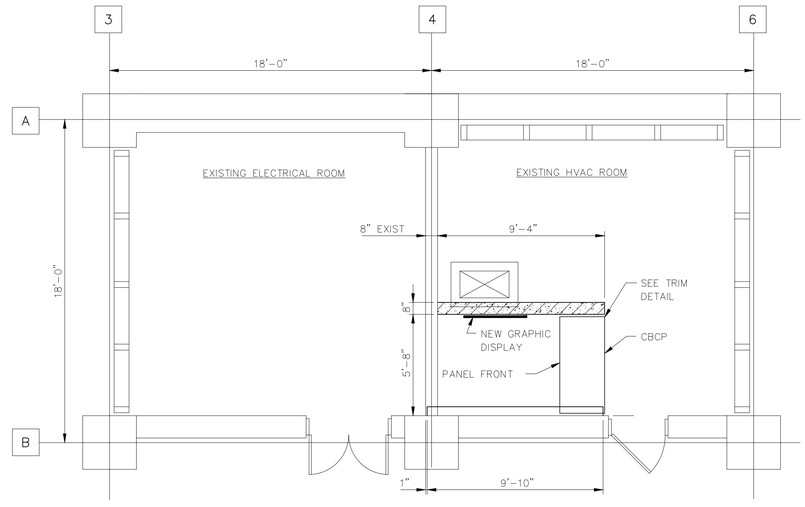

PARTIAL PLAN - FL EL 15'-10"
EXISTING CONTROL ROOM

SCALE: I"=1'-0"

RECORD DRAWING

THIS RECORD DRAWING IS NOT WARRANTED BUT IS BELIEVED TO REPRESENT CONDITIONS UPON COMPLETION OF CONSTRUCTION WITHIN REASONABLE TOLERANCES, BASED UPON THE INFORMATION FURNISHED TO THE ENGINEER PERTAINING TO CHANGES MADE DURING CONSTRUCTION.

GREELEY AND HANSEN
ENGINEERS
1715 NORTH WESTSHORE BOULEVARD
TAMPA, FLORIDA 33607-4135

DESIGNED	TRG
DRAWN	TK
CHECKED	JRP

APPROVED _____ DATE _____

_____ DATE _____
GREELEY AND HANSEN, ENGINEERS

NO.	DATE	APPD	REVISION
4	7/31/96		RECORD DWG REVISIONS

SCALE
1 0 1 FT — 1 1/2"=1'-0"
4 0 4 8 FT — 1/4"=1'-0"

CITY OF TAMPA, FLORIDA
HOOKERS POINT WASTEWATER TREATMENT PLANT
PLANT EXPANSION
PHASE I DIVISION 5H3B
STANDBY POWER AND SLUDGE STORAGE FACILITIES

INSTRUMENTATION
GENERAL
PANEL DETAILS

PROJ NO. 202G
DWG A14
SHEET
DATE DECEMBER 1991 REV 4

5H3B_0AI-004

FILE: H3B-A04 SCALE: 1:1 09/11, 1996 at 11:59 -- *13_c4h (Hardware Lock)*

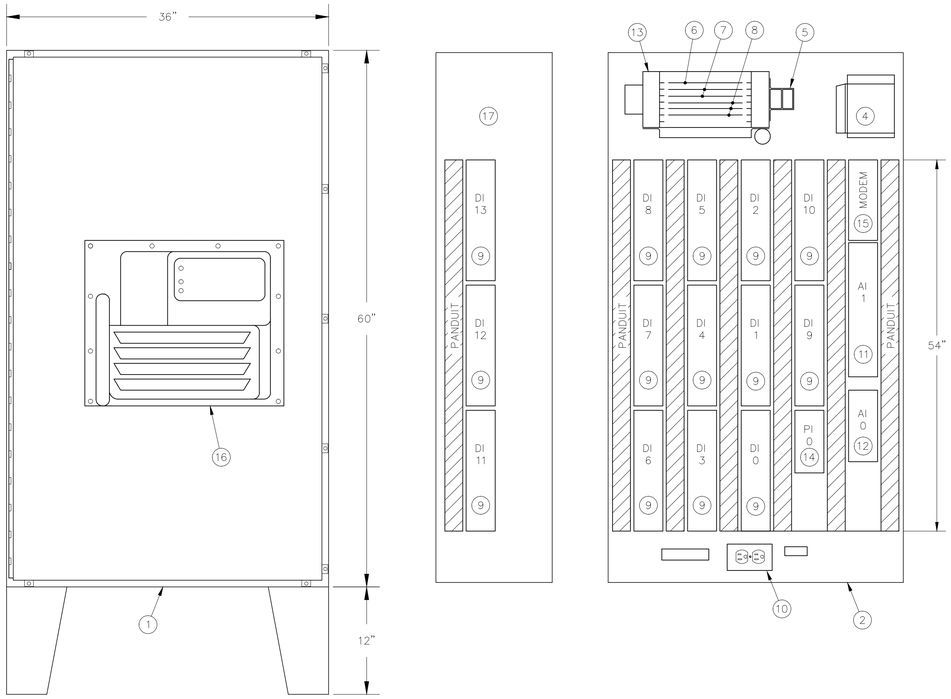

RTU PANEL LAYOUT – SCB

SCALE: 1/8"=1'–0"

(SLUDGE CONTROL BLDG)

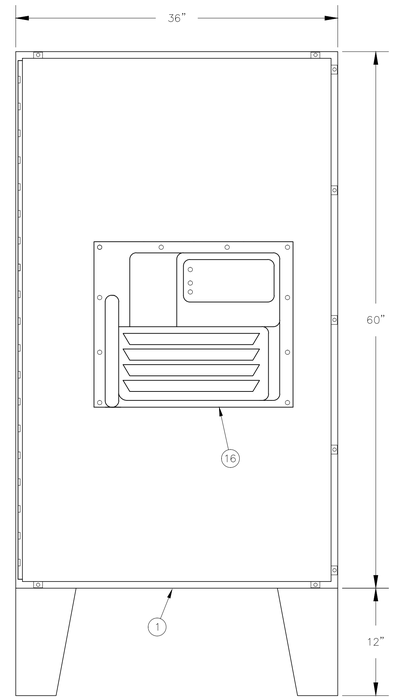

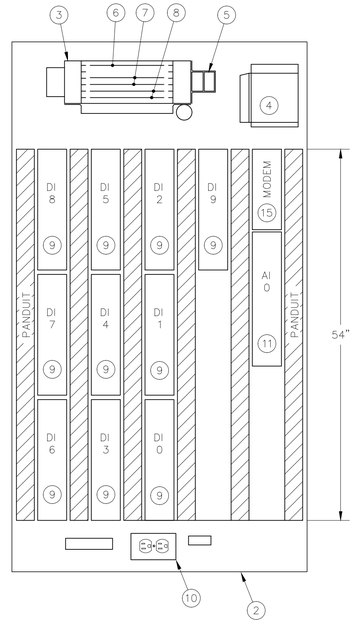

(STANDBY POWER FACILITY)

RTU PANEL LAYOUT – SPE

SCALE: 1/8"=1'–0"

NOTE(S):

1. MINIMUM DIMENSIONS SHOWN. CONTRACTOR SHALL INCREASE SIZE OF CABINETS IF REQUIRED AT NO COST TO CITY. DEPTH IS 13.5 INCHES.
2. CONTRACTOR MAY RELOCATE I/O AND TERMINAL CARDS IF NECCESSARY FOR FABRICATION AND IF APPROVED IN ADVANCE BY CITY.

RECORD DRAWING

THIS RECORD DRAWING IS NOT WARRANTED BUT IS BELIEVED TO REPRESENT CONDITIONS UPON COMPLETION OF CONSTRUCTION WITHIN REASONABLE TOLERANCES, BASED UPON THE INFORMATION FURNISHED TO THE ENGINEER PERTAINING TO CHANGES MADE DURING CONSTRUCTION.

ITEM	DESCRIPTION
17	SIDE PANEL
16	PURGE UNIT
15	MODEM TERMINATOR
14	8 CHANNEL PULSE COUNT TERMINATOR
13	9 SLOT CARDCAGE
12	8 CHANNEL ANALOG INPUT TERMINATOR
11	16 CHANNEL ANALOG INPUT TERMINATOR
10	AC RECEPTACLE
9	16 CHANNEL DIGITAL INPUT TERMINATOR
8	DIGITAL I/O CARD
7	HYBRID I/O CARD
6	CPU CARD
5	BATTERIES
4	24V POWER SUPPLY
3	6 SLOT CARDCAGE
2	PANEL ASSEMBLY
1	NEMA 4 FLOOR MOUNTING CABINET

EMA

GREELEY AND HANSEN
ENGINEERS
1715 NORTH WESTSHORE BOULEVARD
TAMPA, FLORIDA 33607–4135

DESIGNED M.H.M.
DRAWN M.H.M.
CHECKED M.G.W.

APPROVED _____ DATE _____
_____ DATE _____
GREELEY AND HANSEN, ENGINEERS

NO.	DATE	APPD	REVISION
2	8/16/96		RECORD DWG REVISIONS

SCALE
8 0 8 16 FT 1/8"=1'–0"

CITY OF TAMPA, FLORIDA
HOOKERS POINT WASTEWATER TREATMENT PLANT
PLANT EXPANSION
PHASE I DIVISION 5H3B
STANDBY POWER AND SLUDGE STORAGE FACILITIES

INSTRUMENTATION
GENERAL
RTU CONFIGURATIONS

PROJ NO. 202G
DWG AI5
SHEET
DATE DECEMBER 1991 REV 2

5H3B_0AI-005

FILE: H3B-AI05 SCALE: 1:1 09/11, 1996 at 12:09 — "13_c4h (Hardware Lock)"

DUCTWORK SYMBOLS

DESCRIPTION	SYMBOL
DUCT WIDTH X DEPTH (FIRST DIMENSION IS DIMENSION SEEN)	W x D
INCLINED RISE (WITH RESPECT TO FLOW)	R
INCLINED DROP (WITH RESPECT TO FLOW)	D
VOLUME DAMPER (SHAFT PARALLEL TO PAPER)	
REGISTER OR GRILLE (FACE PERPENDICULAR TO PAPER)	Ú 48X12 3000 CFM
REGISTER OR GRILLE (FACE PARALLEL TO PAPER)	(FAR SIDE) Ú 48X12 3000 CFM
(Ú) EQUIPMENT DESIGNATIONS	
DIFFUSER	D
REGISTER	R
CEILING DIFFUSER	CD
SUPPLY DIFFUSER	SD
CEILING REGISTER	CR
GRILLE	G
WALL GRILLE	WG
CEILING GRILLE	CG
TRANSFER GRILLE	TG
DRUM LOUVER	DL
WALL DIFFUSER	WD
WALL REGISTER	WR
RECTANGULAR DIFFUSER (SIZE GIVEN REFERS TO NECK SIZE)	D L X W ___ CFM
ROUND DIFFUSER (SIZE GIVEN REFERS TO NECK SIZE)	D ? ___ CFM
LINEAR DIFFUSER	
DUCT SECTION (SUPPLY)	
DUCT SECTION (EXHAUST OR RETURN)	
ROUND DUCT WITH TRANSITION TO RECTANGULAR DUCT	

DESCRIPTION	SYMBOL
TURNING VANES	
DEFLECTING (SPLITTER) DAMPER WITH ROD & LOCK	
AIR EXTRACTOR WITH ROD & LOCK	
SUPPLY DUCT DOWN	
EXHAUST OR RETURN DUCT UP	
FLEXIBLE DUCT CONNECTION	
FLEXIBLE DUCT	
ACCESS DOORS IN DUCT	(FAR SIDE) AD (SIZE)
OUTLET AIR DIRECTION	
INLET AIR DIRECTION	
DIRECTION OF AIR FLOW IN DUCT	
DUCT SOUND ATTENUATOR	DSA
FIRE DAMPER (RATING NOTED IF OTHER THAN 1Ð HOUR)	
SPLITTER DAMPER (WITH ROD & LOCK)	

PIPING SYMBOLS

DESCRIPTION	SYMBOL
HEATING WATER SUPPLY	HWS
HEATING WATER RETURN	HWR
COOLING WATER SUPPLY	CWS
COOLING WATER RETURN	CWR
CHILLED WATER SUPPLY	CHWS
CHILLED WATER RETURN	CHWR
LOW PRESSURE STEAM	LPS
LOW PRESSURE CONDENSATE	LPC
MEDIUM PRESSURE STEAM	MPS
MEDIUM PRESSURE CONDENSATE	MPC
HIGH PRESSURE STEAM	HPS
HIGH PRESSURE CONDENSATE	HPC
FUEL OIL SUPPLY	FOS
FUEL OIL RETURN	FOR
FUEL OIL FILL	FOF
FUEL OIL VENT	FOV
BOILER FEED	BF
NATURAL GAS	NG
LIQUIFIED PETROLEUM GAS	LPG
REFRIGERANT LIQUID	RL
REFRIGERANT SUCTION	RS
REFRIGERANT DISCHARGE	RD
CONDENSATE PUMP DISCHARGE	CPD
COMPRESSED AIR	A
GLYCOL SUPPLY	GLS
GLYCOL RETURN	GLR
PRESSURE & TEMPERATURE TEST PLUG	P&T
BALANCING VALVE	
MANUAL BALANCING & FLOW MEASURING VALVE	
AUTOMATIC BALANCING & FLOW MEASURING VALVE	
TRIPLE DUTY VALVE	

DESCRIPTION	SYMBOL
INLINE PUMP	
BASE MOUNTED PUMP	
PIPE GUIDE	
PIPE ANCHOR	
FLOAT & THERMOSTATIC TRAP	
THERMOSTATIC TRAP	
EXPANSION JOINT	
PIPE FLOW DIRECTION	
PIPE PITCH DOWN (WITH RESPECT TO FLOW)	DN
PIPE PITCH UP (WITH RESPECT TO FLOW)	UP
PIPE CAPPED	
MANUAL AIR VENT	
AUTOMATIC AIR VENT	

MISCELLANEOUS DESIGNATIONS

DESCRIPTION	DESIGNATION
BOTTOM OF DUCT ELEVATION	B/D EL
TOP OF DUCT ELEVATION	T/D EL
INVERT ELEVATION	INV EL
CENTERLINE ELEVATION	? EL
CUBIC FEET PER MINUTE	CFM
THOUSAND BTU PER HOUR	MBH
GRAVITY DAMPER	GD
SPLITTER DAMPER	SD
BACKDRAFT DAMPER	BDD
BALL JOINT	BJ
NOT TO SCALE	NTS
OUTSIDE AIR INTAKE	OAI
NORMALLY OPEN	N.O.
NORMALLY CLOSED	N.C.
TYPICAL	TYP
FLAT ON TOP	FOT
FLAT ON BOTTOM	FOB
STAINLESS STEEL	SST
EQUIPMENT IDENTIFICATION	BUILDING DESIGNATION — EQUIP. NO. — XXX–XXX–XX — EQUIP. DESIGNATION (SEE SCHEDULE)

TEMPERATURE CONTROL SYMBOLS

DESCRIPTION	SYMBOL
MOTOR ACTUATOR	M
SOLENOID ACTUATOR	S
PNEUMATIC ACTUATOR	
2–WAY CONTROL VALVE (WITH SOLENOID ACTUATOR)	S
3–WAY CONTROL VALVE (WITH PNEUMATIC ACTUATOR)	
BUTTERFLY CONTROL VALVE (WITH MOTOR ACTUATOR)	M
OPPOSED BLADE CONTROL DAMPER (WITH MOTOR ACTUATOR)	M
PARALLEL BLADE CONTROL DAMPER (WITH MOTOR ACTUATOR)	
SPACE TEMPERATURE SENSOR/THERMOSTAT	T
SPACE HUMIDITY SENSOR/HUMIDISTAT	H
TEMPERATURE SENSOR WITH RIGID ELEMENT	T
TEMPERATURE SENSOR WITH AVERAGING ELEMENT	T
PRESSURE SENSOR	P
DIFFERENTIAL PRESSURE SENSOR	DP
HUMIDITY SENSOR	H
DEW POINT TEMPERATURE SENSOR	DW
CFM AIR MEASURING STATION	AM
HIGH TEMPERATURE THERMOSTAT	HT
LOW TEMPERATURE THERMOSTAT	LT
SPACE SMOKE DETECTOR	S
DUCT SMOKE DETECTOR	S
PADDLE FLOW SWITCH	FS
DIFFERENTIAL PRESSURE SWITCH	DP
HAZARDOUS GAS DETECTOR (Ú INDICATES GAS)	Ú
TEMPERATURE CONTROL PANEL	TCP

NOTES:

1. THIS IS A GENERAL LEGEND PROVIDED TO FACILITATE USE OF THE PLANS. REFER TO THE PLANS AND SPECIFICATIONS FOR REQUIRED ITEMS.
2. FOR OTHER VALVE, EQUIPMENT AND PIPING SYMBOLS SEE GENERAL PIPING SYMBOLS AND PLUMBING LEGEND.
3. "TYPICAL" DENOTES EQUIPMENT OR INFORMATION SERVING AS AN EXAMPLE FOR A GROUP OF ITEMS SIMILAR IN TYPE AND ARRANGEMENTS NOT OTHERWISE NOTED.

EMTEC Corporation
CONSULTING ENGINEERS
1723 W. KENNEDY BOULEVARD
SUITE 210
TAMPA, FLORIDA 33606

RECORD DRAWING

THIS RECORD DRAWING IS NOT WARRANTED BUT IS BELIEVED TO REPRESENT CONDITIONS UPON COMPLETION OF CONSTRUCTION WITHIN REASONABLE TOLERANCES, BASED UPON THE INFORMATION FURNISHED TO THE ENGINEER PERTAINING TO CHANGES MADE DURING CONSTRUCTION.

GREELEY AND HANSEN
ENGINEERS
1715 NORTH WESTSHORE BOULEVARD
TAMPA, FLORIDA 33607–4135

DESIGNED BP
DRAWN BP
CHECKED JRP

APPROVED _____ DATE _____
_____ DATE _____
GREELEY AND HANSEN, ENGINEERS

NO.	DATE	APPD	REVISION
	9/5/96		RECORD DWG REVISIONS

SCALE
8 0 8 16 FT
1/8"=1'–0"

CITY OF TAMPA, FLORIDA
HOOKERS POINT WASTEWATER TREATMENT PLANT
PLANT EXPANSION
PHASE I DIVISION 5H3B
STANDBY POWER AND SLUDGE STORAGE FACILITIES

BUILDING
GENERAL
HVAC
HVAC LEGEND

PROJ NO. 202G
DWG AH1
SHEET
DATE JANUARY 1992 REV 0

5H3B_0AH-001

FAN SCHEDULE

FAN NO.	AREAS SERVICED	LOCATION	TYPE	CFM	S.P. (IN.)	RPM	BHP	ELECTRICAL DATA MHP	VOLTS	PHASE	DRIVE	BASIS OF DESIGN	OPTIONS
SPF-REF-1	ENGINE GENERATOR ROOM	ENGINE GENERATOR ROOM ROOF	UPBLAST ROOF EXHAUST	56000	0.25	830	–	15.0	480	3	TEFC BELT	HARTZELL SERIES 69 TYPE LO3	REFER TO SPECIFICATIONS
SPF-REF-2	ENGINE GENERATOR ROOM	ENGINE GENERATOR ROOM ROOF	UPBLAST ROOF EXHAUST	56000	0.25	830	–	15.0	480	3	TEFC BELT	HARTZELL SERIES 69 TYPE LO3	REFER TO SPECIFICATIONS
SPF-REF-3	ENGINE GENERATOR ROOM	ENGINE GENERATOR ROOM ROOF	UPBLAST ROOF EXHAUST	56000	0.25	830	–	15.0	480	3	TEFC BELT	HARTZELL SERIES 69 TYPE LO3	REFER TO SPECIFICATIONS
SPF-REF-4	ENGINE GENERATOR ROOM	ENGINE GENERATOR ROOM ROOF	UPBLAST ROOF EXHAUST	56000	0.25	830	–	15.0	480	3	TEFC BELT	HARTZELL SERIES 69 TYPE LO3	REFER TO SPECIFICATIONS
SPF-REF-5	ENGINE GENERATOR ROOM	ENGINE GENERATOR ROOM ROOF	UPBLAST ROOF EXHAUST	56000	0.25	830	–	15.0	480	3	TEFC BELT	HARTZELL SERIES 69 TYPE LO3	REFER TO SPECIFICATIONS
SPF-REF-6	COMPRESSOR ROOM	ROOF	CENTRIFUGAL EXHAUST	3080	0.25	800	–	1/2	480	3	TEFC BELT	HARTZELL SIZE 20 HBD 200 FA	REFER TO SPECIFICATIONS

NOTES:

1. REFER TO SPECIFICATIONS FOR SEQUENCE OF OPERATION AND ACCESSORIES.
2. SPF = STANDBY POWER FACILITY.

SINGLE PACKAGE WATER-TO-AIR ROOFTOP HEAT PUMP

SYST. NO.	AREAS SERVED	FAN DATA CFM	VENT CFM	ESP"	MHP	VOLTS/ø	COOLING COIL EDB	EWB	TOTAL	SENS.	COMPRESSOR NO.	FLA. EA.	KW EA.	CONDENSER EWT	WTR	GPM	WPD	BASIS OF DESIGN
SPF-AC-1	SPF ELEC. ROOM	4800	480	1.00	3.0	460/3	85.7	73.0	178,000	111,000	3	9.6	–	95	10	45.0	28.0	TRANE WPTD 150

NOTES:

1. MAXIMUM ELECTRICAL ROOM CONDITIONS: 85°F, 60% RH.
2. REFER TO SPECIFICATIONS FOR SEQUENCE OF OPERATION AND ACCESSORIES.
3. SPF = STANDBY POWER FACILITY.

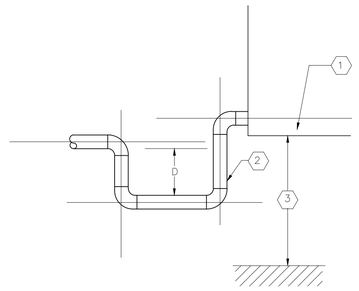

1. HEAT PUMP CONDENSATE DRAIN PAN.
2. EXTEND CONDENSATE LINE FULL SIZE FROM HEAT PUMP CONDENSATE DRAIN PAN WHERE INDICATED ON DRAWINGS.
3. UNIT SHALL BE SUPPORTED HIGH ENOUGH TO ACCOMMODATE PIPING ARRANGEMENT.
4. D = MINIMUM 2x EXTERNAL STATIC PRESSURE IN INCHES WATER COLUMN.

CONDENSATE DRAIN TRAP DETAIL

SCALE: NONE

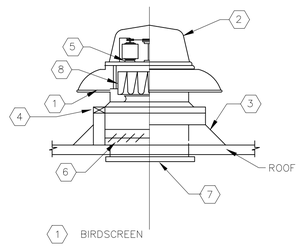

1. BIRDSCREEN
2. SPUN ALUMINUM HOUSING
3. CONCRETE POURED FAN CURB REFER TO ARCHITECTURAL DRAWINGS
4. WOOD NAILER
5. VIBRATION ISOLATED MOTOR
6. BACKDRAFT DAMPER
7. EXHAUST GRILLE WHERE APPLICABLE
8. CENTRIFUGAL BLOWER

ROOF EXHAUST FAN DETAIL

SCALE: NONE

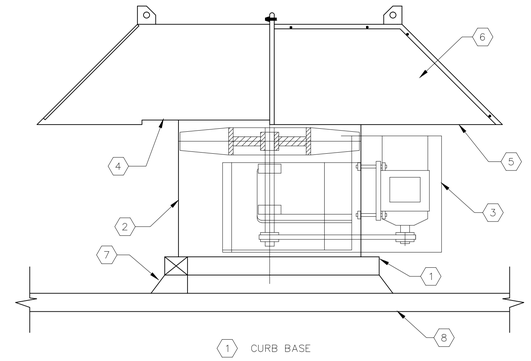

1. CURB BASE
2. BELT DRIVE ASSEMBLY
3. WEATHER COVER
4. FLAT HOUSING PANEL
5. BIRD SCREEN
6. WELDED HOOD
7. POURED CONCRETE CURB. REFER TO ARCHITECTURAL DRAWINGS FOR DETAIL.
8. ROOF

ROOF VENTILATER

SCALE: NONE

RECORD DRAWING

THIS RECORD DRAWING IS NOT WARRANTED BUT IS BELIEVED TO REPRESENT CONDITIONS UPON COMPLETION OF CONSTRUCTION WITHIN REASONABLE TOLERANCES, BASED UPON THE INFORMATION FURNISHED TO THE ENGINEER PERTAINING TO CHANGES MADE DURING CONSTRUCTION.

EMTEC Corporation
CONSULTING ENGINEERS
1723 W. KENNEDY BOULEVARD
SUITE 210
TAMPA, FLORIDA 33606

GREELEY AND HANSEN
ENGINEERS
1715 NORTH WESTSHORE BOULEVARD
TAMPA, FLORIDA 33607-4135

DESIGNED BP
DRAWN DJM
CHECKED JRP

APPROVED _____ DATE _____
_____ DATE _____
GREELEY AND HANSEN, ENGINEERS

NO.	DATE	APPD	REVISION
2	8/16/96		RECORD DWG REVISIONS

SCALE

CITY OF TAMPA, FLORIDA
HOOKERS POINT WASTEWATER TREATMENT PLANT
PLANT EXPANSION
PHASE I DIVISION 5H3B
STANDBY POWER AND SLUDGE STORAGE FACILITIES

HVAC
SCHEDULES AND DETAILS

PROJ NO. 202G
DWG AH2
SHEET
DATE JANUARY 1992 REV 2

5H3B_0AH-002

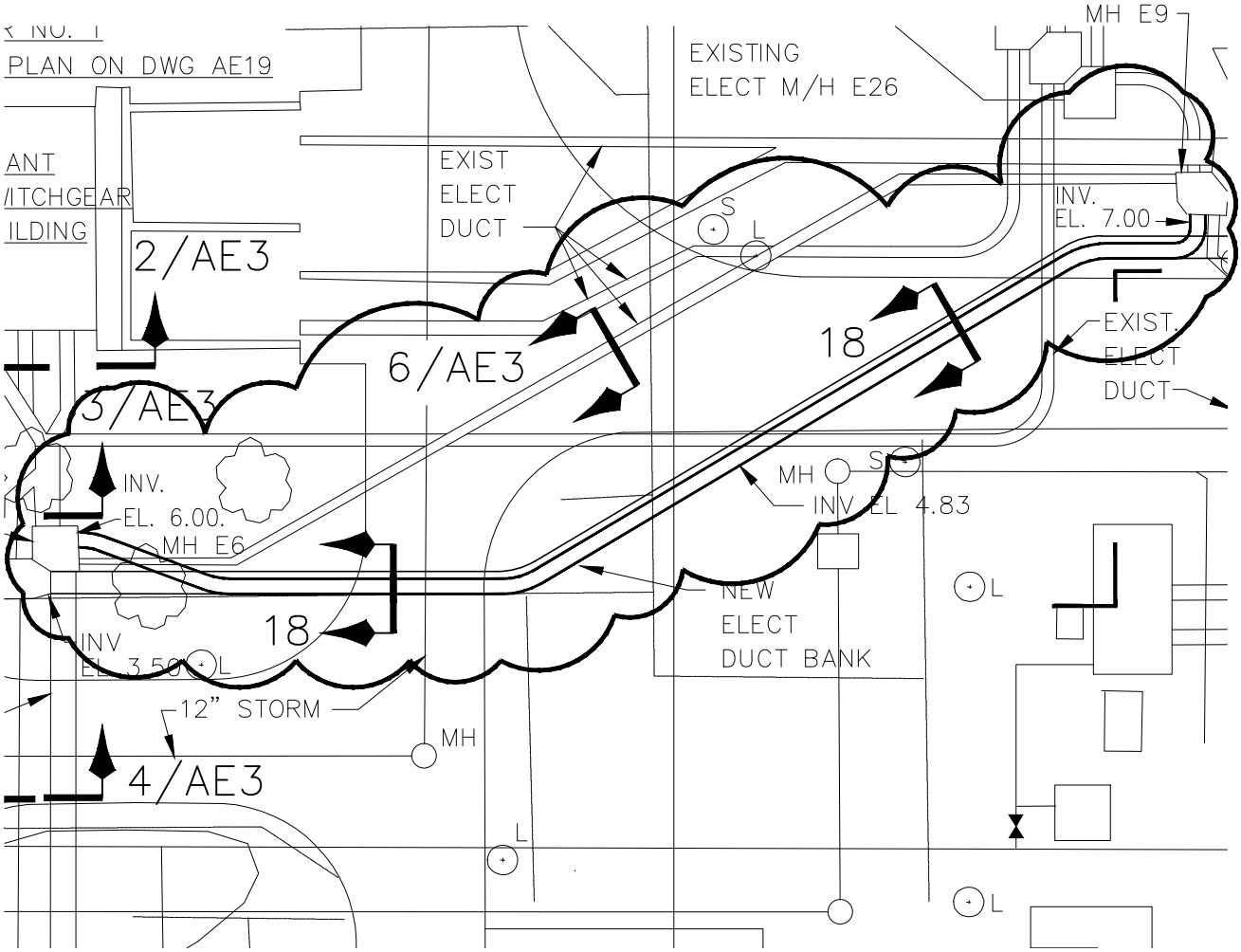

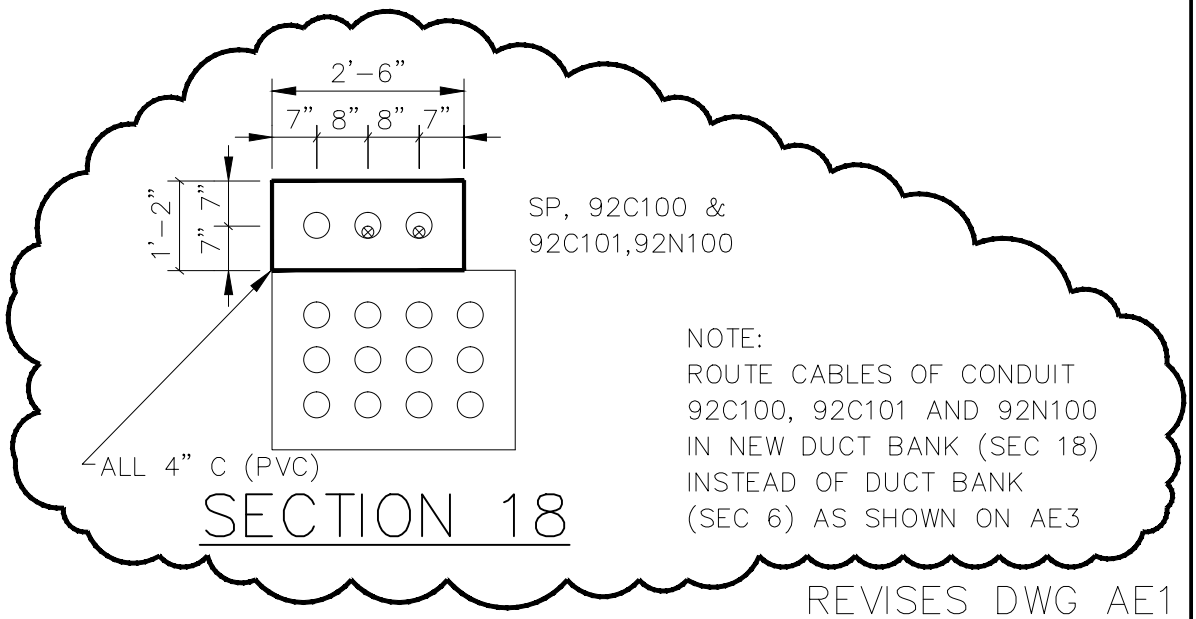

REVISES DWG AE1

DES BBK	CKD GJ					H.P.W.W.T.P.
DR GR	APPD					DIVISION 5H3B
GREELEY AND HANSEN ENGINEERS TAMPA, FLORIDA 34607						SD-55
		NO.	DATE	APPD	REVISION	DATE JAN 95 NO. 0

FILE: H3BESD55 SCALE: 1:1i 01/23, 1995 at 09:26 *R11 c2*

5H3B_0AE-001A

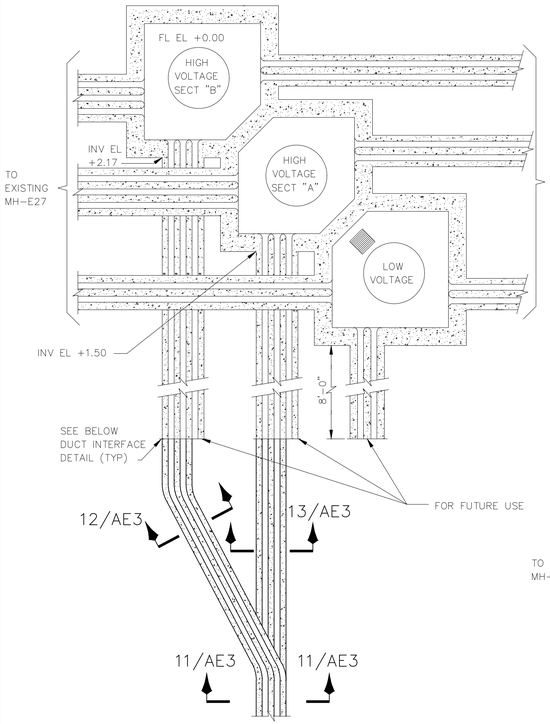

EXISTING MANHOLE MH-E28

SCALE:1"=1'-0"

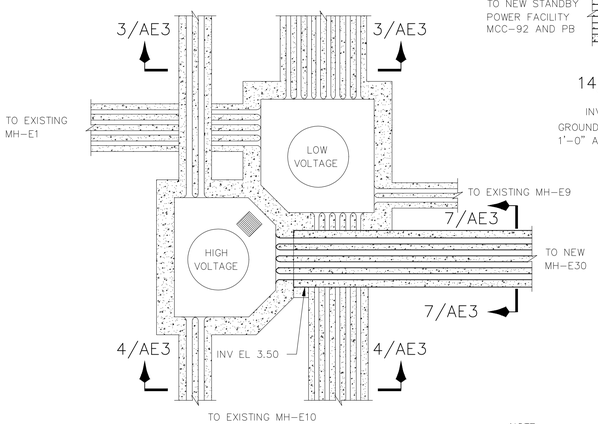

EXISTING MANHOLE MH-E6

SCALE:1"=1'-0"

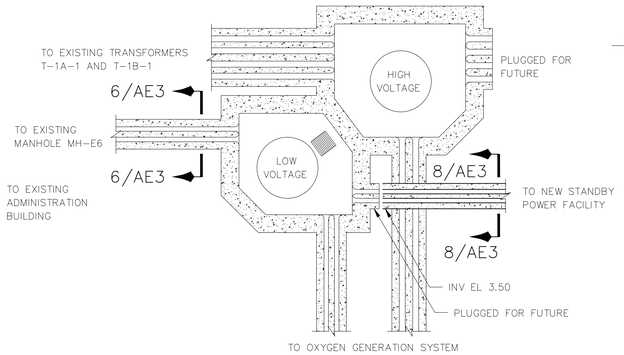

EXISTING MANHOLE MH-E9

SCALE:1"=1'-0"

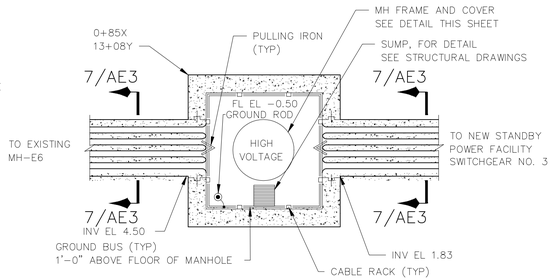

NEW MANHOLE MH-E30

SCALE:1"=1'-0"

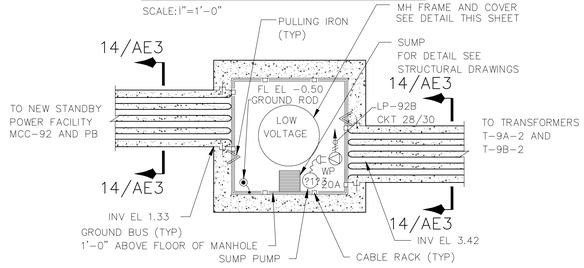

NEW MANHOLE MH-E31

SCALE:1"=1'-0"

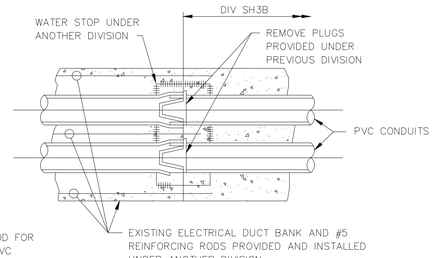

DUCT INTERFACE DETAIL

N.T.S.

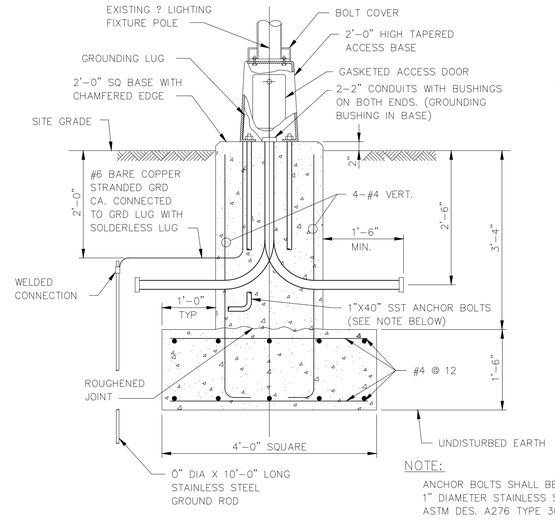

NOTE:

ANCHOR BOLTS SHALL BE MADE FROM 1" DIAMETER STAINLESS STEEL TO MEET ASTM DES. A276 TYPE 304 (4-REQUIRED)

LIGHTING POLE BASE DETAIL

NOT TO SCALE

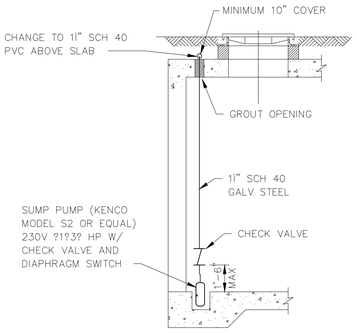

TYPICAL SUMP PUMP DETAIL

N.T.S.

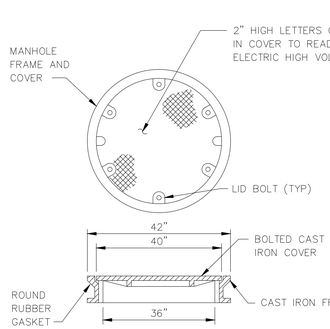

ELECTRICAL MANHOLE FRAME AND COVER DETAIL

N.T.S.

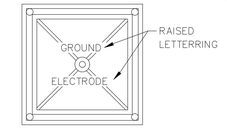

PLAN

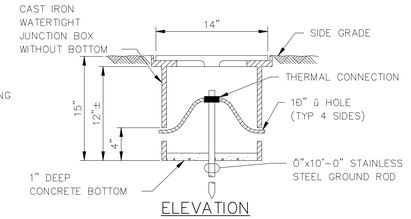

ELEVATION

GROUND ROD AND ACCESS BOX DETAIL

N.T.S.

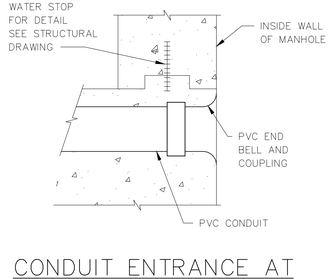

CONDUIT ENTRANCE AT MANHOLE DETAIL

N.T.S.

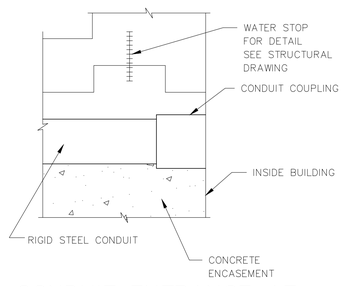

CONDUIT ENTRANCE AT BUILDING WALL DETAIL

N.T.S.

MANHOLE AND SITE WORK NOTES:

1. FOR CONSTRUCTION OF ELECTRICAL MANHOLES, DUCT ENCASEMENT AND TRANSFORMER PADS, SEE STRUCTURAL DRAWINGS.
2. PROVIDE IN EACH MANHOLE MCGRAW EDISON OR EQUAL TYPE DU10B, TYPE "A" SERIES CABLE RACKS, DU9S SERIES CABLE SUPPORTS, DE12U SERIES UNDERGROUND INSULATORS AND DU1T SERIES PULLING IRONS AS INDICATED ON ELECTRICAL MANHOLE PLANS.
3. PROVIDE IN EACH MANHOLE A 1"x1Ð" COPPER GROUND BUS SPACED Ð" FROM THE MANHOLE WALL AND MOUNTED APPROXIMATELY 1'-0" ABOVE THE MANHOLE FLOOR.
4. PROVIDE IN EACH MANHOLE A 0"x10'-0" STAINLESS STEEL GROUND ROD WITH TOP OF ROD EXTENDING 6" ABOVE THE MANHOLE FLOOR. ALL GROUND RODS SHALL BE INSTALLED PRIOR TO THE POURING OF THE MANHOLE FLOOR. SLEEVES THROUGH THE FLOOR ARE NOT ACCEPTABLE.
5. 4" DUCT SHALL BE SPACED 8" O.C. THROUGHOUT. 3" DUCT SHALL BE SPACED 7" O.C. THROUGHOUT.
6. ALL ELECTRICAL DUCTS TERMINATING IN MANHOLES SHALL BE FITTED WITH END BELL INSTALLED FLUSH WITH THE INSIDE WALL OF THE MANHOLE. SEE DETAIL ON THIS DRAWING.
7. ALL GROUND WIRES IN DUCT TERMINATING IN MANHOLES SHALL BE CONNECTED TO THE GROUND BUS USING CADWELL CONNECTIONS.
8. BACKFILL FOR ALL ELECTRICAL DUCTS AND MANHOLES SHALL BE TYPE "A".
9. ALL UNDERGROUND ELECTRICAL DUCT BANKS ENTERING BUILDINGS SHALL MAKE A TRANSITION TO GALVANIZED RIGID STEEL CONDUIT WITHIN 5'-0" OF THE BUILDING OUTSIDE WALL.
10. ALL TRANSFORMER SECONDARY CONDUITS SHALL BE GALVANIZED RIGID STEEL THE ENTIRE LENGTH.
11. ALL UNDERGROUND ELECTRICAL DUCT BANKS SHALL SLOPE TO THE MANHOLES AND SHALL HAVE A MINIMUM COVER OF 36" TO THE TOP OF THE CONCRETE ENCASEMENT UNLESS OTHERWISE NOTED.
12. ALL TRANSFORMER PRIMARY CONDUITS SHALL MAKE A TRANSITION TO GALVANIZED RIGID STEEL CONDUIT WITHIN 5'-0" OF THE OUTSIDE WALL OF TRANSFORMER YARD ENCLOSURE.

RECORD DRAWING

THIS RECORD DRAWING IS NOT WARRANTED BUT IS BELIEVED TO REPRESENT CONDITIONS UPON COMPLETION OF CONSTRUCTION WITHIN REASONABLE TOLERANCES, BASED UPON THE INFORMATION FURNISHED TO THE ENGINEER PERTAINING TO CHANGES MADE DURING CONSTRUCTION.

GREELEY AND HANSEN
ENGINEERS
1715 NORTH WESTSHORE BOULEVARD
TAMPA, FLORIDA 33607-4135

DESIGNED	GJ
DRAWN	EPB
CHECKED	BBK

APPROVED _____ DATE _____

_____ DATE _____

GREELEY AND HANSEN, ENGINEERS

NO.	DATE	APPD	REVISION
3	8/1/96		RECORD DWG REVISIONS

SCALE

4 0 4 8 FT 1/4"=1'-0"

CITY OF TAMPA, FLORIDA
HOOKERS POINT WASTEWATER TREATMENT PLANT
PLANT EXPANSION
PHASE I DIVISION 5H3B
STANDBY POWER AND SLUDGE STORAGE FACILITIES

STANBY POWER FACILTY
ELECTRICAL
MANHOLES, DETAILS AND SECTIONS

PROJ NO. 202G
DWG AE2
SHEET
DATE DECEMBER 1991 REV 3

5H3B_0AE-002

FILE: H3B_AE02.SCALE: 1:48 09/05, 1996 at 11:28 • 13.4in (horizontal scale)•

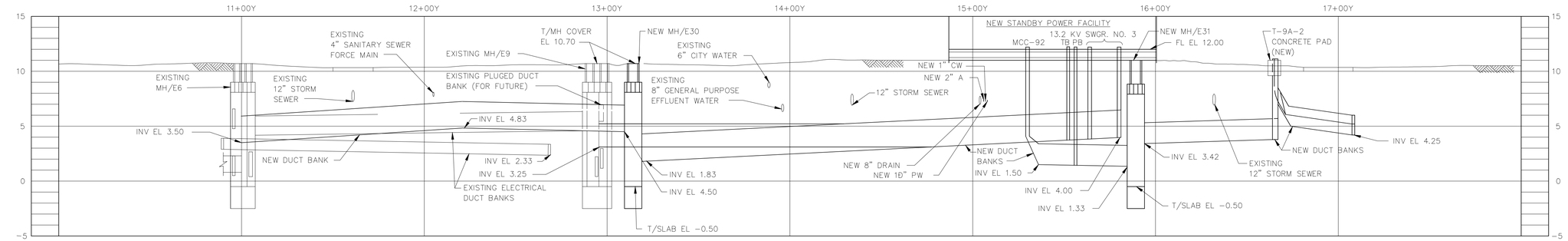

SECTION 1/AE1

SCALE: VERT 1"=5'
HORIZ 1"=30'

NOTE:
1. THE EXISTING 13.2 KV CABLES 2HS1 AND 2HS2 SHALL BE REMOVED FROM 13.2 KV SWITCHGEAR NO. 1 TO 13.2 KV SWITCHGEAR NO. 2 AFTER 3HS1A, 3HS2A, 3H1 AND 3H2 ARE IN SERVICE. AFTER CABLES 2HS1 AND 2HS2 ARE REMOVED INSTALL 3HS1B AND 3HS2B.

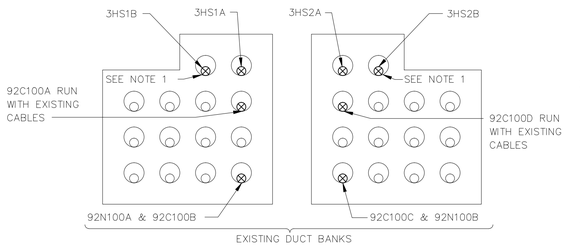

SECTION 2/AE1

NOT TO SCALE

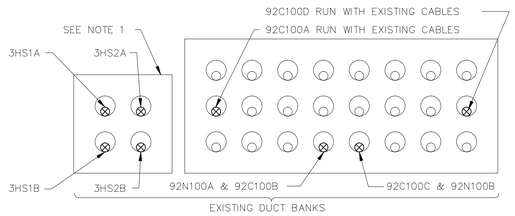

SECTION 3/AE1, AE2

NOT TO SCALE

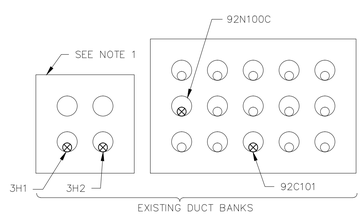

SECTION 4/AE1, AE2

NOT TO SCALE

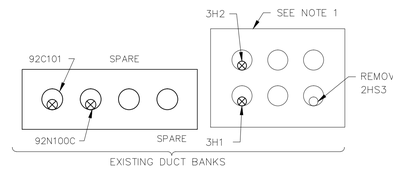

SECTION 5/AE1

NOT TO SCALE

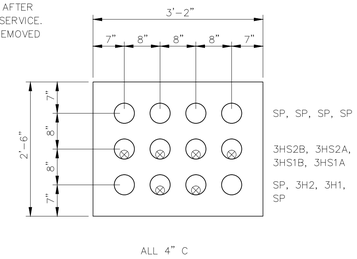

SECTION 7/AE1, AE2

NOT TO SCALE

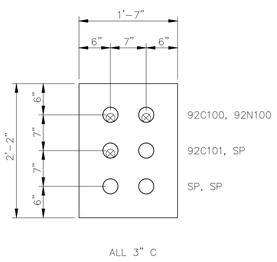

SECTION 8/AE1, AE2

NOT TO SCALE

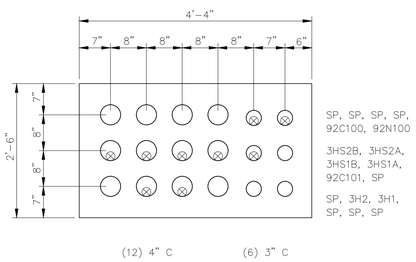

SECTION 9/AE1

NOT TO SCALE

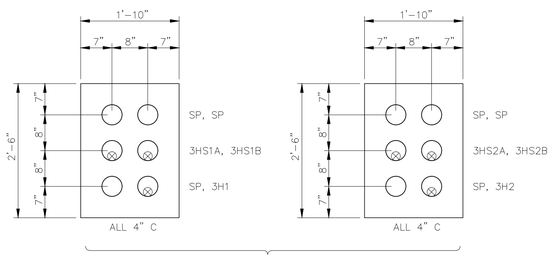

SECTION 10/AE1, TE13

NOT TO SCALE

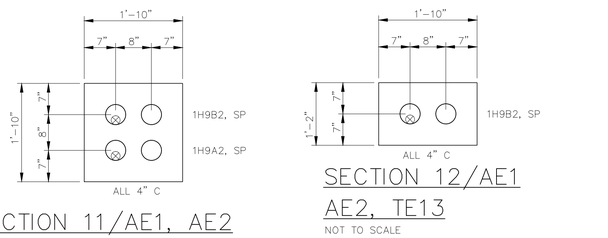

SECTION 11/AE1, AE2

NOT TO SCALE

SECTION 12/AE1 AE2, TE13

NOT TO SCALE

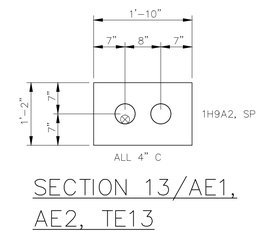

SECTION 13/AE1, AE2, TE13

NOT TO SCALE

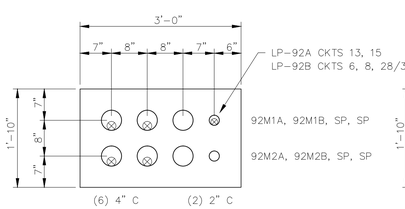

SECTION 14/AE1, AE2

NOT TO SCALE

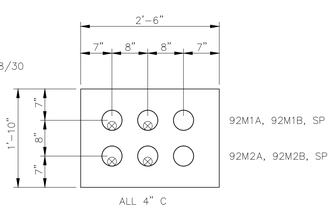

SECTION 15/AE1, TE13

NOT TO SCALE

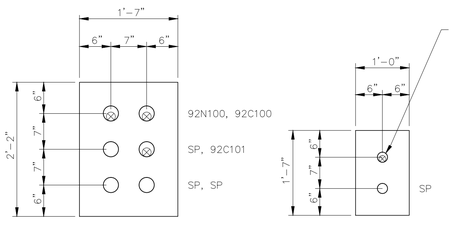

SECTION 16/AE1, TE13

NOT TO SCALE

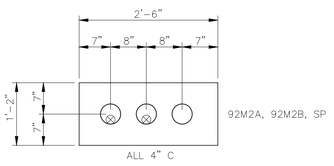

SECTION 17/AE1, AE2

NOT TO SCALE

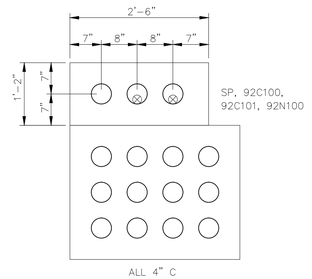

SECTION 18/AE1

NOT TO SCALE

RECORD DRAWING
THIS RECORD DRAWING IS NOT WARRANTED BUT IS BELIEVED TO REPRESENT CONDITIONS UPON COMPLETION OF CONSTRUCTION WITHIN REASONABLE TOLERANCES, BASED UPON THE INFORMATION FURNISHED TO THE ENGINEER PERTAINING TO CHANGES MADE DURING CONSTRUCTION.

FILE: H3B-AE03.DWG 1:60 04/13/98 11:40 GH-A

GREELEY AND HANSEN
ENGINEERS
1715 NORTH WESTSHORE BOULEVARD
TAMPA, FLORIDA 33607−4135

DESIGNED GJ
DRAWN SK
CHECKED BBK

APPROVED
DATE
DATE
GREELEY AND HANSEN, ENGINEERS

NO.	DATE	APPD	REVISION
3	8/1/96		RECORD DWG REVISIONS

SCALE
AS SHOWN

CITY OF TAMPA, FLORIDA
HOOKERS POINT WASTEWATER TREATMENT PLANT
PLANT EXPANSION
PHASE I DIVISION 5H3B
STANDBY POWER AND SLUDGE STORAGE FACILITIES

GENERAL
ELECTRICAL

DUCT SECTIONS

PROJ NO. 202G
DWG AE3
SHEET
DATE DECEMBER 1991 REV 3

5H3B_0AE-003

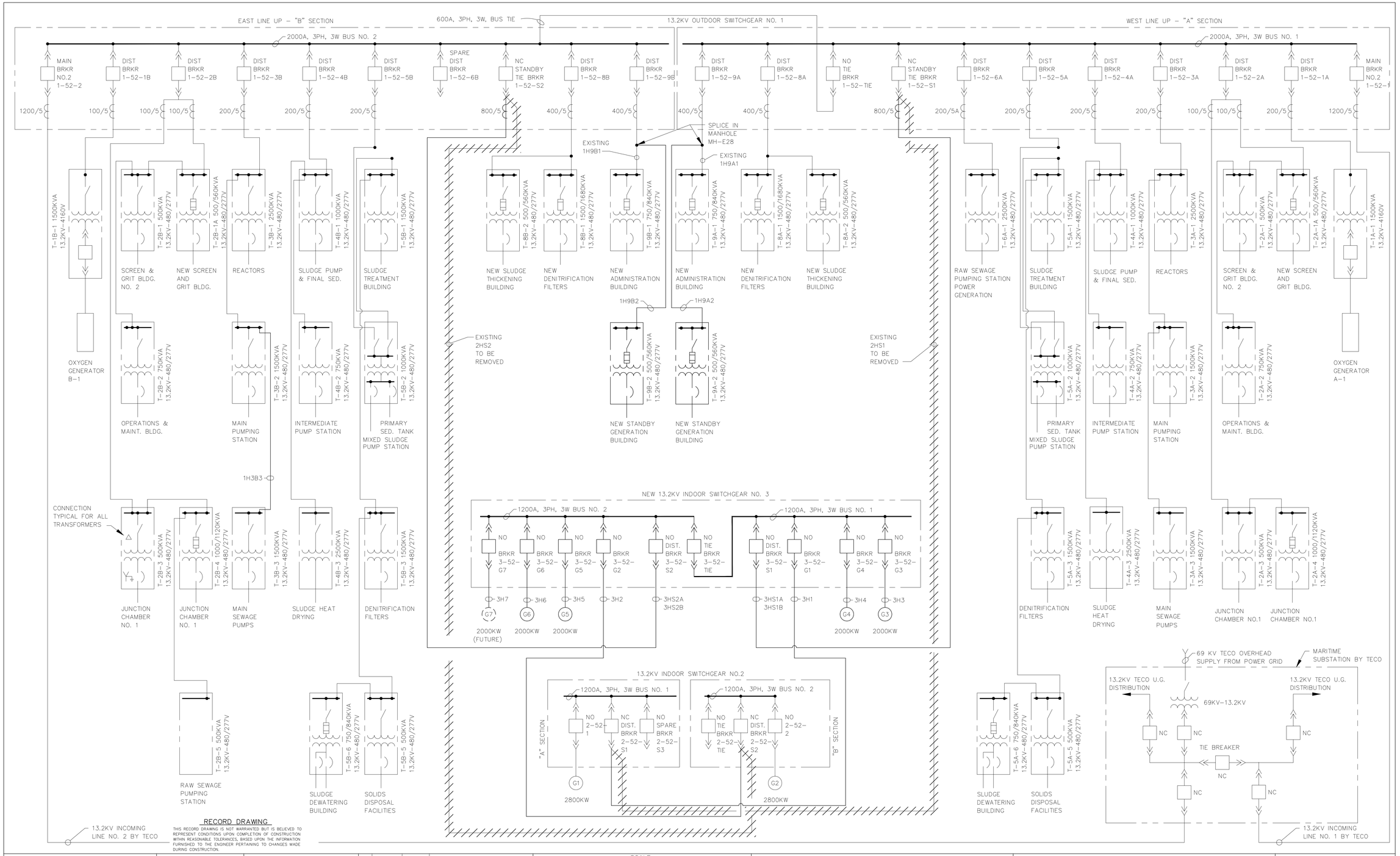

RECORD DRAWING

THIS RECORD DRAWING IS NOT WARRANTED BUT IS BELIEVED TO REPRESENT CONDITIONS UPON COMPLETION OF CONSTRUCTION WITHIN REASONABLE TOLERANCES, BASED UPON THE INFORMATION FURNISHED TO THE ENGINEER PERTAINING TO CHANGES MADE DURING CONSTRUCTION.

GREELEY AND HANSEN
ENGINEERS
1715 NORTH WESTSHORE BOULEVARD
TAMPA, FLORIDA 33607-4135

DESIGNED BBK
DRAWN LCC
CHECKED BBK

APPROVED _____ DATE _____
_____ DATE _____
GREELEY AND HANSEN, ENGINEERS

NO.	DATE	APPD	REVISION
2	4/15/98		RECORD DRAWING REVISION

SCALE
NO SCALE

CITY OF TAMPA, FLORIDA
HOOKERS POINT WASTEWATER TREATMENT PLANT
PLANT EXPANSION
PHASE I DIVISION 5H3B
STANDBY POWER AND SLUDGE STORAGE FACILITIES

GENERAL
ELECTRICAL
OVERALL

PROJ NO. 202G
DWG AE4
SHEET
DATE DECEMBER 1991 REV 3

5H3B_0AE-004

POWER AND LIGHTING SYMBOLS

- EXPOSED CONDUIT RUN
- CONDUIT RUN CONCEALED IN FLOOR OR UNDERGROUND
- CONDUIT RUN CONCEALED IN WALLS, ABOVE SUSPENDED CEILING, OR IN ROOF SLAB
- CONDUIT WITH HOT, NEUTRAL AND GROUND WIRES (LONG LINE IS NEUTRAL; LONG LINE WITH DOT DENOTES GROUND)
- HOME RUN TO LIGHTING PANELBOARD (LP-6 INDICATES PANELBOARD AND 1, 3, 5 INDICATES 20A-1P CKTS. 1, 3 AND 5) — LP6 1,3,5
- FLEXIBLE LIQUIDTIGHT CONDUIT
- G — GROUNDING CONDUCTOR
- E — UNDERGROUND DUCT ENCASED IN CONCRETE
- DB — DIRECT BURIAL CABLE
- CONDUIT-UP
- CONDUIT-DOWN
- LIGHTING PANELBOARD 120/208V,3?,4W,SN
- LIGHTING PANELBOARD 277/480V,3?,4W,SN
- E — TELEPHONE CABINET
- EQUIPMENT ENCLOSURE AS INDICATED ON PLAN
- MANUALLY OPERATED STARTER OR CIRCUIT BREAKER
- DS — DISCONNECT SWITCH
- M — FULL VOLTAGE MAGNETIC STARTER
- M — COMBINATION FULL VOLTAGE MAGNETIC STARTER WITH CIRCUIT BREAKER
- C — MAGNETIC CONTACTOR
- 5 — MOTOR-THREE PHASE (5HP)
- X — MOTOR-SINGLE PHASE (XXX)
- WH — ELECTRIC WATER HEATER
- GROUND ROD
- LIGHTNING ROD
- D — PREWIRED THREE PHASE MOTOR AND CONTROLER

- CEILING MOUNTED INCANDESCENT OR MERCURY VAPOR LIGHTING FIXTURE. "A" INDICATES FIXTURE TYPE LISTED IN SCHEDULE
- WALL MOUNTED LIGHTING FIXTURE
- EXIT SIGN
- EMERGENCY INCANDESCENT OR MERCURY VAPOR LIGHTING FIXTURE
- FLUORESCENT FIXTURE
- EMERGENCY FLUORESCENT FIXTURE
- FLUORESCENT STRIP LIGHT
- POLE MOUNTED LIGHTING FIXTURE
- BP — BATTERY PACK FOR EMERGENCY FIXTURE
- SINGLE RECEPTACLE - 20A, 2 POLE, 3 WIRE
- DUPLEX RECEPTACLE - 20A, 2 POLE, 2 WIRE
- DUPLEX RECEPTACLE - 20A, 2 POLE, 3 WIRE, 208V
- 30A — SINGLE RECEPTACLE - 2 POLE, 3 WIRE, 208V, RATING NOTED
- 60A — 3 POLE, 3 WIRE, 480V, WELDING OUTLET (60A)
- C — CLOCK OUTLET
- SINGLE POLE SWITCH
- 2P — TWO POLE SWITCH
- 3 — THREE WAY SWITCH
- 4 — FOUR WAY SWITCH
- T — SWITCH WITCH THERMAL OVERLOAD PROTECTION
- M — MOMENTARY CONTACT SWITCH
- D — DOOR SWITCH
- P — SWITCH WITH PILOT LIGHT
- G — COMBUSTIBLE GAS DETECTION SENSOR
- PC — PHOTO ELECTRIC CELL
- J — OUTLET BOX WIT BLANK COVER
- JB — JUNCTION BOX
- PB — PULL BOX
- TB — TERMINAL BOX
- WATERTIGHT FLOOR OUTLET BOX
- FLOOR OUTLET BOX WITH DUPLEX RECEPTACLE - 20A, 2 POLE, 3 WIRE

- S — INTERCOMMUNICATION SPEATER OUTLET (GENERAL TEL. CO)
- V — INTERCOMMUNICATION SPEAKER VOLUME CONTROL OUTLET (GENERAL TEL. CO.)
- INTERCOMMUNICATION TELEPHONE OUTLET (GENERAL TEL. CO.)
- HORN
- INTERCOMMUNICATION TELEPHONE FLOOR OUTLET (GENERAL TEL. CO.)

GENERAL SYMBOLS

- START-STOP PUSHBUTTON
- ON/OFF/L — ON-OFF MAINTAINED CONTACT PUSHBUTTON WITH LOCK ATTACHMENT
- S/L — INDICATING LIGHT AND START-STOP PUSHBUTTON WITH LOCK ATTACHMENT ON STOP
- FORWARD-STOP-REVERSE OR SLOW-FAST-STOP PUSHBUTTON
- SINGLE PUSHBUTTON
- SELECTOR SWITCH ("HOA" INDICATES HAND OFF AUTO; "MOR" INDICATES MANUAL OFF REMOTE; ETC)
- L — ON-OFF SWITCH WITH LOCK ATTACHMENT ON OFF POSITION
- EP — ELECTRIC-PNEUMATIC SWITCH
- F — FLOAT SWITCH
- FL — FLOW SWITCH
- FS — FREEZESTAT
- LS — LIMIT SWITCH
- M — MOTOR OPERATED VALVE OR SLUICE GATE WITH INTEGRAL CONTROLLER PROVIDE A TOGGLE TYPE DISCONNECT SWITCH AT EACH VALVE
- P — PRESSURE SWITCH
- PE — PNEUMATIC-ELECTRIC SWITCH
- S — SOLENOID OPERATED VALVE
- T — TEMPERATURE SWITCH
- TG — TACHOMETER GENERATOR
- TS — TORQUE SWITCH
- DM — DAMPER MOTOR

NOTE:

THE SYMBOLS SHOWN COMPRISE A GENERAL LEGEND TO FACILITATE USE OF PLANS. REFER TO THE PLANS AND SPECIFICATIONS FOR ITEMS REQUIRED.

RECORD DRAWING

THIS RECORD DRAWING IS NOT WARRANTED BUT IS BELIEVED TO REPRESENT CONDITIONS UPON COMPLETION OF CONSTRUCTION WITHIN REASONABLE TOLERANCES, BASED UPON THE INFORMATION FURNISHED TO THE ENGINEER PERTAINING TO CHANGES MADE DURING CONSTRUCTION.

GREELEY AND HANSEN
ENGINEERS
1715 NORTH WESTSHORE BOULEVARD
TAMPA, FLORIDA 33607-4135

DESIGNED BBK
DRAWN AK
CHECKED BBK

APPROVED _____ DATE _____
_____ DATE _____
GREELEY AND HANSEN, ENGINEERS

NO.	DATE	APPD	REVISION
	7/31/96		RECORD DWG REVISIONS

SCALE
NO SCALE

CITY OF TAMPA, FLORIDA
HOOKERS POINT WASTEWATER TREATMENT PLANT
PLANT EXPANSION
PHASE I DIVISION 5H3B
STANDBY POWER AND SLUDGE STORAGE FACILITIES

SYMBOL LIST
ELECTRICAL
GENERAL

PROJ NO. 202G
DWG AE5
SHEET
DATE DECEMBER 1991 REV 0

5H3B_0AE-005

FILE: H3B-AE05 SCALE: 1:1 09/05, 1996 at 13:30 - *13_4h (Hardware Lock)*

GENERAL SYMBOLS

- [L] LEVEL TRANSMITTER (PRESSURE ANALOG TYPE)
- [LC] LEVEL TRANSMITTER (FLOAT TYPE)
- [T] TEMPERATURE TRANSMITTER
- [FT] FLOW TRANSMITTER

MH	DESIGNATES MOUNTING HEIGHT
WP	DESIGNATES WEATERPROOF EQUIPMENT
XP	DESIGNATES EXPLOSIONPROOF EQUIPMENT
EWC	DESIGNATES ELECTRICAL WATER COOLER
MOV	DESIGNATES MOTOR OPERATED VALVE
EX	DESIGNATES EXISTING EQUIPMENT
△	DENOTES DEVICE LOCATED NEAR MOTOR

CONDUIT AND CABLE SCHEDULE LEGEND

(19) (M) (123A) — TYPICAL CONDUIT AND CABLE RUN NUMBER

- INDICATES SPECIFIC CONDUIT AND CABLE RUN FROM SOURCE DISTRIBUTION CENTER
- CODE LETTER INDICATING SOURCE DISTRIBUTION CENTER TYPE AND OR WIRING SYSTEM
- INDICATES SOURCE DISTRIBUTION CENTER NUMBER

EXAMPLE: 19M123A–INDICATES CONDUIT AND CABLE RUN NUMBER 123A OF A WIRING SYSTEM FROM MOTOR CONTROL CENTER NO. 19.

CODE LETTER	WIRING SYSTEM AND/OR SOURCE
M	CONTROL POWER AND INSTRUMENTATION WIRING FROM AND TO MOTOR CONTROL CENTERS, PUMP CONTROL PANELS AND 480V SWITCHGEAR (SEE NOTE BELOW)
H	13.2KV FEEDERS
MG	GENERATOR SYSTEM WIRING
EG	EGCP NO. 1 AND NO. 2 WIRES
EM	EGMP WIRING
LP	208/120V LIGHTING PANEL WIRING
B	48V AND 24V D.C. BATTERY WIRING

ONE LINE DIAGRAM SYMBOLS

- 600A — BUS–RATING AS SHOWN
- INCOMING LINE
- OUTGOING LINE
- 13.8KV CABLE TERMINATION
- DISCONNECTING DEVICE
- CONDUCTORS CONNECTED
- 100A — FUSE–RATING AS SHOWN
- 100A — SINGLE THROW DISCONNECT SWITCH–RATING AS SHOWN
- 100A/70A — FUSED DISCONNECT SWITCH–100A SWITCH, 70A FUSE
- INTERRUPTER SWITCH
- FUSED INTERRUPTER SWITCH
- 100A — LOW VOLTAGE AIR CIRCUIT BREAKER WITHOUT TRIP DEVICE 100A FRAME
- 225A/125A — LOW VOLTAGE AIR CIRCUIT BREAKER WITH 225A FRAME AND 125A TRIP
- 600A/400A — LOW VOLTAGE DRAWOUT TYPE AIR CIRCUIT BREAKER WITH 600A FRAME AND 400A THERMAL MAGNETIC (SOLID STATE SENSOR SIMILAR) TRIP
- [52] — MEDIUM VOLTAGE DRAWOUT TYPE AIR CIRCUIT BREAKER
- [G] — CIRCUIT BREAKER WITH SOLID STATE GROUND FAULT SENSOR
- (27) PROTECTIVE RELAY
  - 27–UNDERVOLTAGE
  - 32–REVERSE POWER
  - 50–INSTANTANEOUS OVERCURRENT
  - 51–A.C. TIME OVERCURRENT
  - 52–A.C. CIRCUIT BREAKER
  - 60–VOLTAGE BALANCE
  - 43–MANUAL–AUTOMATIC MASTER TRANSFER FUNCTION SELECTOR SWITCH
  - DBX–DEAD BUS AUXILIARY RELAY
  - 86–LOCKOUT
  - 87–DIFFERENTIAL CURRENT
  - G–DEVICE IN GROUND CIRCUIT
  - N–DEVICE IN NEUTRAL CIRCUIT
  - X–AUXILIARY RELAY
  - IR–INTERPOSING RELAY
  - GSR–GROUND SENSING RELAY
  - 25/27–SYNCHRONIZING CHECK RELAY
  - 62–TIME DELAY RELAY
- 225A/150A — LOW VOLTAGE AIR CIRCUIT BREAKER WITH COORDINATED CL FUSES 225A FRAME AND 150A TRIP
- (27) — LOW VOLTAGE AIR CIRCUIT BREAKER WITH SHUNT TRIP DEVICE
- KEY INTERLOCK–DOTTED LINE WITH ARROWS INDICATES MOVEMENT OF KEY DURING INTERLOCK PROCEDURE
- [A] — METER, INSTRUMENT OR INSTRUMENT SWITCH
  - A–AMMETER
  - V–VOLTMETER
  - W–WATTMETER
  - WHD–WATTHOUR DEMAND METER
  - W/VAR–COMBINATION WATTMETER/VARMETER
  - AS–AMMETER SWITCH
  - VS–VOLTMETER SWITCH
  - W/VSW–WATTMETER/VARMETER SWITCH
  - MMS–MICROPROSSER BASED METERING SYSTEM
  - SI–SPEED INDICATOR
  - TM–ELAPSED TIME METER
  - VAR–VARMETER
  - CS–"52" BREAKER CONTROL SWITCH
  - WT–WATTS TRANSDUCER
  - VART–VARS TRANSDUCER
  - VT–VOLTS TRANSDUCER
  - AT–AMPERES TRANSDUCER
  - PS–PHASE SHIFT TRANSFORMER
- GROUND CONNECTION
- LIGHTNING OR SURGE ARRESTOR
- SURGE CAPACITOR
- POWER TRANSFORMER WITH WINDING CONNECTIONS INDICATED
- CPT — CONTROL POWER TRANSFORMER
- PT — POTENTIAL TRANSFORMER

- CT — CURRENT TRANSFORMER
- CURRENT TRANSFORMER – 3PHASE WINDOW TYPE
- THERMAL OVERLOAD ELEMENT (OL)
- (5) — SQUIRREL CAGE MOTOR (INDICATE HORSEPOWER)
- (G) — GENERATOR
- (R) — INDICATING LIGHT (R–RED, G–GREEN, A–AMBER, B–BLUE, W–WHITE)

COMBINATION STARTER WITH CONTROL TRANSFORMERS AND OVERLOAD RELAYS AND MOTOR CIRCUIT PROTECTOR

- FULL VOLTAGE NON REVERSING
- FULL VOLTAGE REVERSING
- FULL VOLTAGE TWO SPEED

SCHEMATIC AND WIRING DIAGRAM SYMBOLS

- (M) — OPERATING COIL
  - M–MOTOR STARTER
  - C–CONTACTOR
  - F–FORWARD
  - R–REVERSE
  - AR–AUXILIARY RELAY
  - CR–CONTROL RELAY
  - TR–TIME DELAY RELAY
- NORMALLY OPEN CONTACT (NO.)
- NORMALLY CLOSED CONTACT (N.C.)
- NORMALLY OPEN CONTACT WITH TIME DELAY CLOSING (ON–DELAY)
- NORMALLY CLOSED CONTACT WITH TIME DELAY CLOSING (OFF–DELAY)
- NORMALLY CLOSED CONTACT WITH TIME DELAY OPENING (ON–DELAY)
- NORMALLY OPEN CONTACT WITH TIME DELAY OPENING (OFF–DELAY)
- (R) — INDICATING LIGHT (R–RED, G–GREEN, A–AMBER, B–BLUE, W–WHITE)
- 3–POSITION SELECTOR SWITCH
- NORMALLY OPEN PUSHBUTTON–MOMENTARY CONTACT
- NORMALLY CLOSED PUSHBUTTON–MOMENTARY CONTACT
- DOUBLE CIRCUIT PUSHBUTTON WITH SPRING RETURN TO NORMAL
- TRANSFORMER
- OL — OVERLOAD RELAY CONTACT
- THERMAL OVERLOAD ELEMENT (OL)
- ON–OFF SWITCH
- [R] — RESISTOR
- (S) — SOLENOID VALVE

NORMALLY OPEN N.O.	NORMALLY CLOSED N.C.	
		LIMIT SWITCH
		FLOAT SWITCH
		PRESSURE SWITCH
		FLOW SWITCH
		TEMPERATURE
		TORQUE
		SEMICONDUCTOR BLOCKING DIODE

RECORD DRAWING

THIS RECORD DRAWING IS NOT WARRANTED BUT IS BELIEVED TO REPRESENT CONDITIONS UPON COMPLETION OF CONSTRUCTION WITHIN REASONABLE TOLERANCES, BASED UPON THE INFORMATION FURNISHED TO THE ENGINEER PERTAINING TO CHANGES MADE DURING CONSTRUCTION.

NOTE:

THE SYMBOLS SHOWN COMPRISE A GENERAL LEGEND TO FACILITATE USE OF PLANS. REFER TO THE PLANS AND SPECIFICATIONS FOR ITEMS REQUIRED.

FILE: H3BAZAE6 SCALE: 1:1 08/22, 1996 at 09:11 — "15_x4"

GREELEY AND HANSEN ENGINEERS 1715 NORTH WESTSHORE BOULEVARD TAMPA, FLORIDA 33607–4135	DESIGNED BBK DRAWN AK CHECKED BBK	APPROVED _____ DATE _____ _____ DATE _____ GREELEY AND HANSEN, ENGINEERS	NO. 2 — DATE 7/31/96 — APPD — REVISION: RECORD DWG REVISIONS	SCALE NO SCALE	CITY OF TAMPA, FLORIDA HOOKERS POINT WASTEWATER TREATMENT PLANT PLANT EXPANSION PHASE I DIVISION 5H3B STANDBY POWER AND SLUDGE STORAGE FACILITIES	GENERAL ELECTRICAL SYMBOL LIST	PROJ NO. 202G DWG AE6 SHEET DATE DECEMBER 1991 — REV 2

5H3B_0AE-006

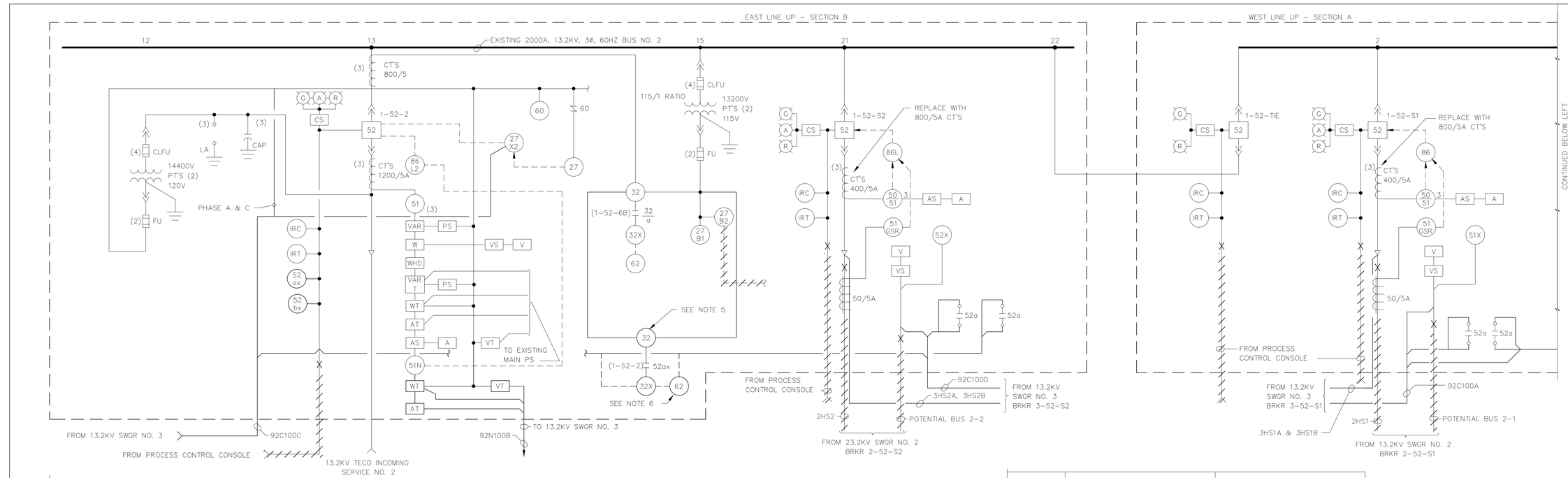

13.2KV SWITCHGEAR NO. 1 – MODIFICATIONS TO THE EXISTING ONE LINE DIAGRAM

13.2KV SWITCHGEAR NO. 1 – MODIFICATIONS TO FRONT ELEVATIONS OF CUBICLES 10, 11

NOTES:

1. ALL EXISTING EQUIPMENT AND WIRING IS SHOWN IN LIGHT LINE WORK. NEW EQUIPMENT AND WIRING IS SHOWN HEAVY.
2. CERTAIN EXISTING DEVICES NOT AFFECTED BY THIS WORK ARE NOT SHOWN.
3. DRILL AND CUT SWITCHGEAR DOORS FOR INSTALLATION OF NEW RELAYS AS REQUIRED.
4. REMOVE EXISTING INTERPOSING RELAYS AND REPLACE WITH AUXILIARY RELAYS 52ax AND 52bx.
5. WIRE NEW 32 RELAY TO SENSE MINIMUM POWER FLOW FROM TECO. 32 RELAY SHALL BE GE TYPE 12CCP13E1A WITH PICKUP SET AT 0.016A.
6. 62 RELAY SHALL BE GE TYPE 12SAM17A22A WITH 0.05–3 SEC TIMING RANGE, SET AT 0.7 SEC.

RECORD DRAWING

THIS RECORD DRAWING IS NOT WARRANTED BUT IS BELIEVED TO REPRESENT CONDITIONS UPON COMPLETION OF CONSTRUCTION WITHIN REASONABLE TOLERANCES, BASED UPON THE INFORMATION FURNISHED TO THE ENGINEER PERTAINING TO CHANGES MADE DURING CONSTRUCTION.

GREELEY AND HANSEN ENGINEERS 1715 NORTH WESTSHORE BOULEVARD TAMPA, FLORIDA 33607-4135	DESIGNED RZ DRAWN AF CHECKED BBK	APPROVED _____ DATE _____ _____ DATE _____ GREELEY AND HANSEN, ENGINEERS	4 / 7/31/96 / RECORD DWG REVISIONS	SCALE NO SCALE	CITY OF TAMPA, FLORIDA HOOKERS POINT WASTEWATER TREATMENT PLANT PLANT EXPANSION PHASE I DIVISION 5H3B STANDBY POWER AND SLUDGE STORAGE FACILITIES

ELECTRICAL See Supplemental Drawing SD-47
GENERAL
ONE LINE DIAGRAM
13.2KV OUTDOOR SWITCHGEAR NO. 1 – MODIFICATIONS

PROJ NO. 202G
DWG AE7
SHEET
DATE DECEMBER 1991 REV 4

5H3B_0AE-007

FILE: H3B-AE07 SCALE: 1:1 09/10, 1998 at 15:29 - "1_c4"

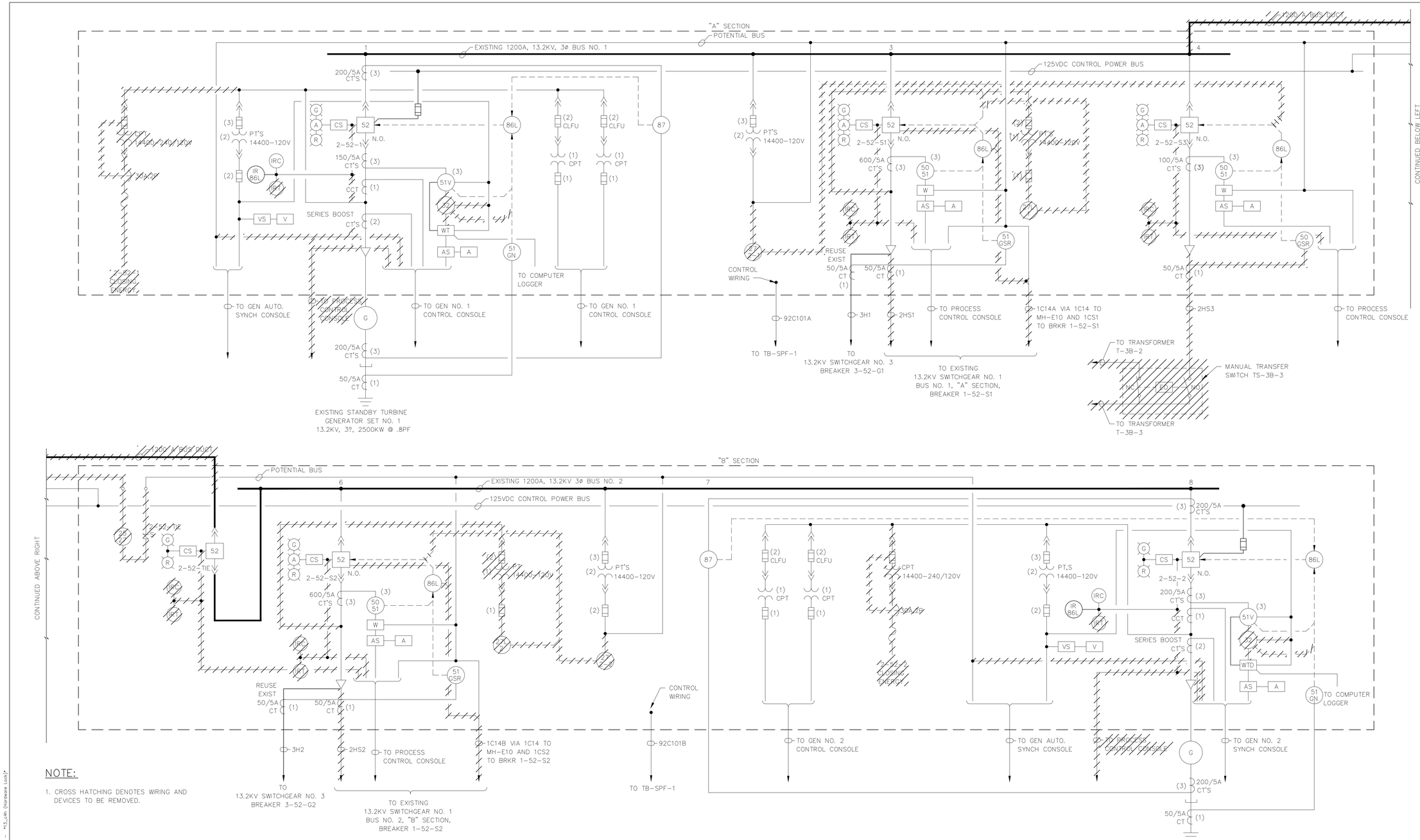

NOTE:

1. CROSS HATCHING DENOTES WIRING AND DEVICES TO BE REMOVED.

MODIFICATIONS TO EXISTING 13.2KV SWITCHGEAR NO. 2

RECORD DRAWING

THIS RECORD DRAWING IS NOT WARRANTED BUT IS BELIEVED TO REPRESENT CONDITIONS UPON COMPLETION OF CONSTRUCTION WITHIN REASONABLE TOLERANCES, BASED UPON THE INFORMATION FURNISHED TO THE ENGINEER PERTAINING TO CHANGES MADE DURING CONSTRUCTION.

GREELEY AND HANSEN
ENGINEERS
1715 NORTH WESTSHORE BOULEVARD
TAMPA, FLORIDA 33607–4135

DESIGNED RZ
DRAWN SK, AF
CHECKED BBK

APPROVED _____ DATE _____
_____ DATE _____
GREELEY AND HANSEN, ENGINEERS

NO.	DATE	APPD	REVISION
3	7/31/96		RECORD DWG REVISIONS

SCALE: NO SCALE

CITY OF TAMPA, FLORIDA
HOOKERS POINT WASTEWATER TREATMENT PLANT
PLANT EXPANSION
PHASE I DIVISION 5H3B
STANDBY POWER AND SLUDGE STORAGE FACILITIES

GENERAL
ELECTRICAL
ONE LINE DIAGRAM
13.2KV INDOR SWITCHGEAR NO. 2 – MODIFICATIONS

PROJ NO. 202G
DWG AE10
SHEET
DATE DECEMBER 1991 REV 3

5H3B_0AE-010

FILE: H3B-AE10 SCALE: 1:1 09/05, 1996 at 14:11 - *13.cfn (Hardware Lock)*

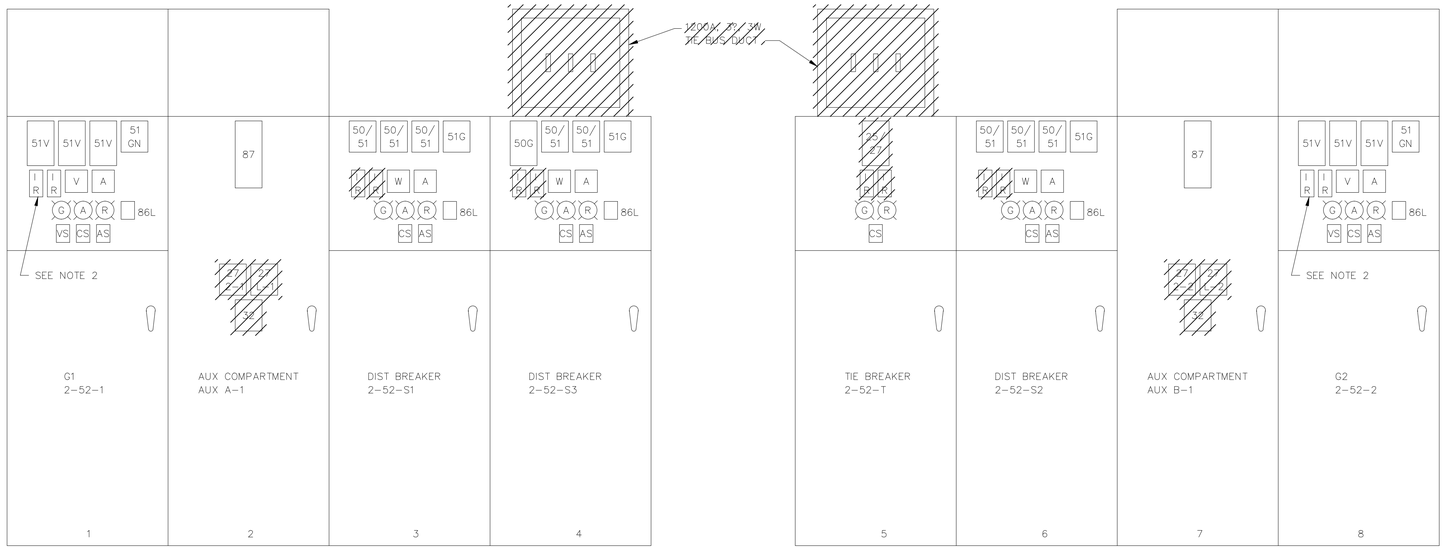

A SECTION

B SECTION

SYMBOL:

- ◇3 — DENOTES DEVICE LOCATED IN 13.2KV SWGR NO. 3
- ⊕ — DENOTES DEVICE LOCATED EXISTING GENERATOR CONTROL CONSOLE
- Φ — DENOTES DEVICE LOCATED IN EXISTING AUTO SYNCH CONSOLE
- ✳ — DENOTES DEVICE LOCATED IN EXISTING PROCESS CONTROL CONSOLE IN MAIN PUMPING STATION

MODIFICATIONS TO EXISTING 13.2KV SWITCHGEAR NO. 2 FRONT ELEVATION

NOT TO SCALE

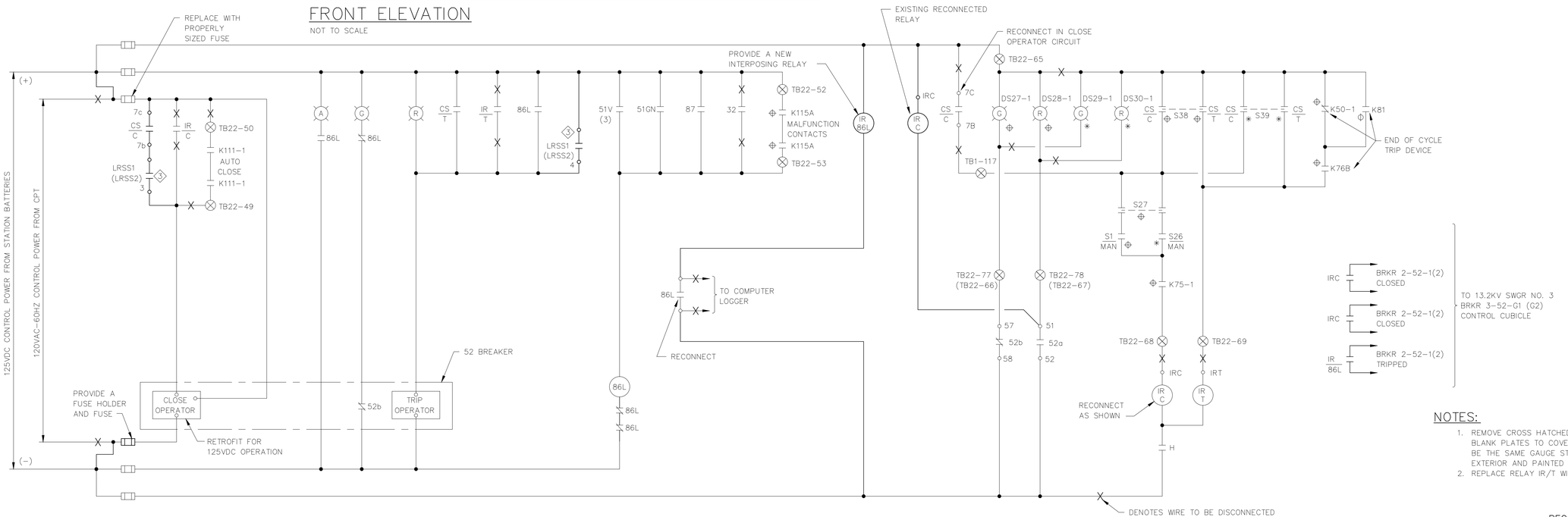

MODIFICATIONS TO EXISTING CONTROLS FOR GENERATOR NO. 1 MAIN BREAKER 2-52-1

(SIMILAR FOR GEN NO. 2 MAIN BREAKER 2-52-2)

NOTES:

1. REMOVE CROSS HATCHED DEVICES AND PROVIDE BLANK PLATES TO COVER OPENINGS. PLATES SHALL BE THE SAME GAUGE STEEL AS THE SWITCHGEAR EXTERIOR AND PAINTED TO MATCH EXISTING FINISH.
2. REPLACE RELAY IR/T WITH RELAY IR/86L.

RECORD DRAWING

THIS RECORD DRAWING IS NOT WARRANTED BUT IS BELIEVED TO REPRESENT CONDITIONS UPON COMPLETION OF CONSTRUCTION WITHIN REASONABLE TOLERANCES, BASED UPON THE INFORMATION FURNISHED TO THE ENGINEER PERTAINING TO CHANGES MADE DURING CONSTRUCTION.

GREELEY AND HANSEN
ENGINEERS
1715 NORTH WESTSHORE BOULEVARD
TAMPA, FLORIDA 33607-4135

DESIGNED RZ
DRAWN AF
CHECKED BBK

APPROVED _____ DATE _____
_____ DATE _____
GREELEY AND HANSEN, ENGINEERS

NO.	DATE	APPD	REVISION
3	8/1/96		RECORD DWG REVISIONS

SCALE

NOT TO SCALE

CITY OF TAMPA, FLORIDA
HOOKERS POINT WASTEWATER TREATMENT PLANT
PLANT EXPANSION
PHASE I DIVISION 5H3B
STANDBY POWER AND SLUDGE STORAGE FACILITIES

GENERAL
ELECTRICAL
SCHEMATIC DIAGRAMS
13.2KV INDOOR SWITCHGEAR NO. 2 – MODIFICATIONS

See Supplemental Drawing SD-50

PROJ NO. 202G
DWG AE11
SHEET
DATE DECEMBER 1991 REV 3

5H3B_0AE-011

FILE: H3B-AE11 SCALE: 1:1 09/05, 1996 at 14:19 - *13_c4h (Hardware Lock)*

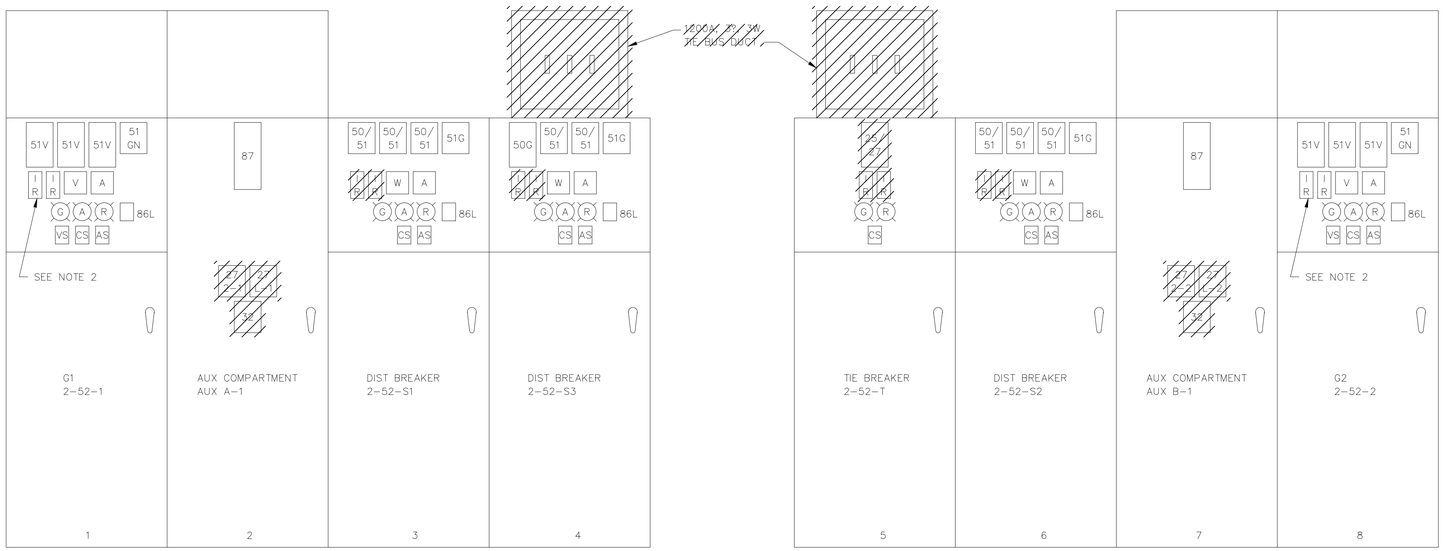

A SECTION

B SECTION

SYMBOL:

- ◇3 — DENOTES DEVICE LOCATED IN 13.2KV SWGR NO. 3
- ⊕ — DENOTES DEVICE LOCATED EXISTING GENERATOR CONTROL CONSOLE
- Φ — DENOTES DEVICE LOCATED IN EXISTING AUTO SYNCH CONSOLE
- ✳ — DENOTES DEVICE LOCATED IN EXISTING PROCESS CONTROL CONSOLE IN MAIN PUMPING STATION

MODIFICATIONS TO EXISTING 13.2KV SWITCHGEAR NO. 2 FRONT ELEVATION

NOT TO SCALE

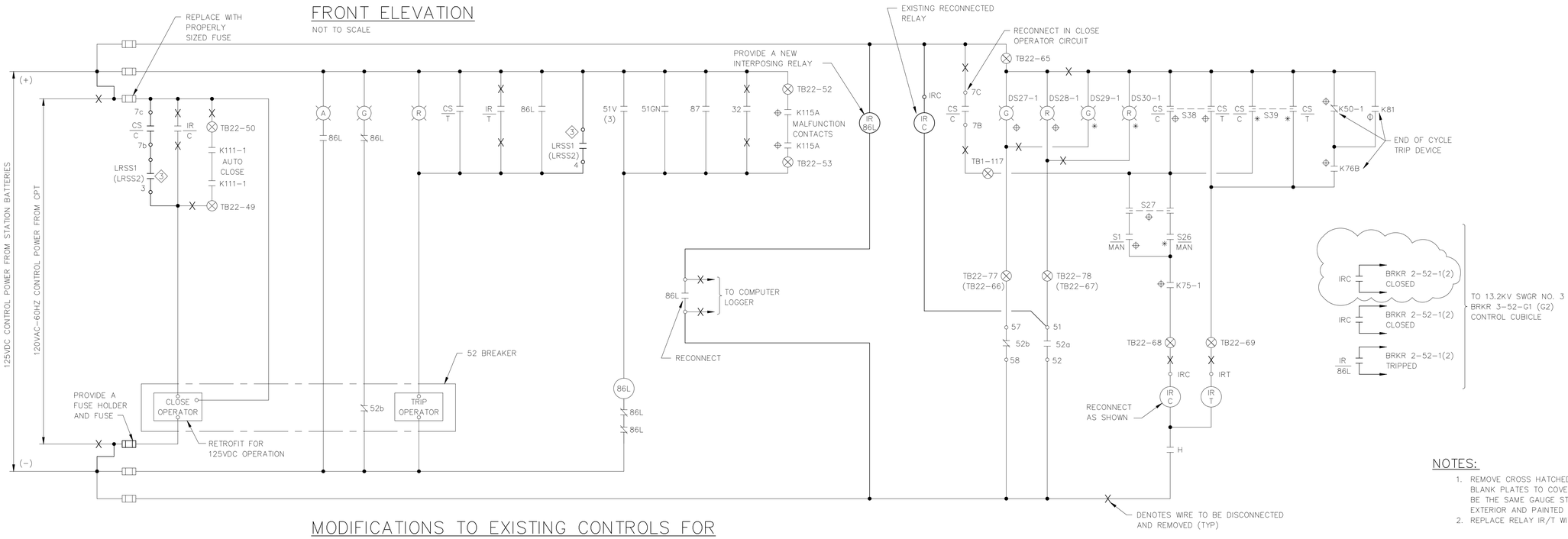

MODIFICATIONS TO EXISTING CONTROLS FOR GENERATOR NO. 1 MAIN BREAKER 2-52-1

(SIMILAR FOR GEN NO. 2 MAIN BREAKER 2-52-2)

NOTES:

1. REMOVE CROSS HATCHED DEVICES AND PROVIDE BLANK PLATES TO COVER OPENINGS. PLATES SHALL BE THE SAME GAUGE STEEL AS THE SWITCHGEAR EXTERIOR AND PAINTED TO MATCH EXISTING FINISH.
2. REPLACE RELAY IR/T WITH RELAY IR/86L.

REVISES DWG AE11

GREELEY AND HANSEN
ENGINEERS
4350 WEST CYPRESS STREET
TAMPA, FLORIDA 33607-4135

DESIGNED	RZ
DRAWN	AF
CHECKED	BBK

APPROVED _____ DATE _____
_____ DATE _____
GREELEY AND HANSEN, ENGINEERS

NO.	DATE	APPD	REVISION

SCALE
NOT TO SCALE

CITY OF TAMPA, FLORIDA
HOOKERS POINT WASTEWATER TREATMENT PLANT
PLANT EXPANSION
PHASE I DIVISION 5H3B
STANDBY POWER AND SLUDGE STORAGE FACILITIES

GENERAL
ELECTRICAL
SCHEMATIC DIAGRAMS
13.2KV INDOOR SWITCHGEAR NO. 2 – MODIFICATIONS

PROJ NO. 202G
DWG SD-50
SHEET
DATE DECEMBER 1991 REV 0

5H3B_0AE-011A

REF: M:\ACAD\WORK\5H3B\5H3B_SD-ALL_111.DWG, 1991 at 10:28 AM by rz

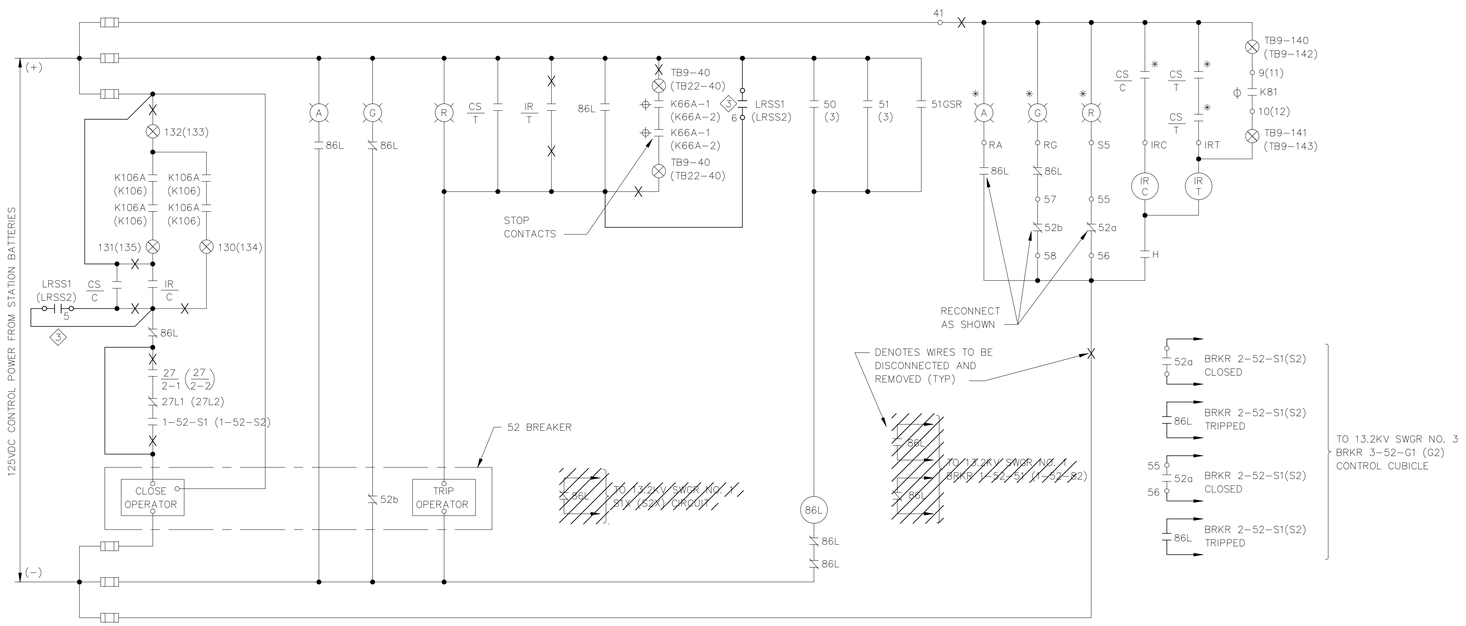

SYMBOL:

- ③ DENOTES DEVICE LOCATED IN 13.2KV SWITCHGEAR NO. 3
- ⌖ DENOTES DEVICE LOCATED EXISTING GENERATOR CONTROL CONSOLE
- ϕ DENOTES DEVICE LOCATED IN EXISTING AUTO SYNCH CONSOLE
- ✱ DENOTES DEVICE LOCATED IN EXISTING PROCESS CONTROL CONSOLE IN MAIN PUMPING STATION

MODIFICATIONS TO EXISTING CONTROLS FOR DISTRIBUTIONS BREAKER 2-52-S1

(SIMILAR FOR DISTRIBUTION BREAKER 2-52-S2)

RECORD DRAWING

THIS RECORD DRAWING IS NOT WARRANTED BUT IS BELIEVED TO REPRESENT CONDITIONS UPON COMPLETION OF CONSTRUCTION WITHIN REASONABLE TOLERANCES, BASED UPON THE INFORMATION FURNISHED TO THE ENGINEER PERTAINING TO CHANGES MADE DURING CONSTRUCTION.

GREELEY AND HANSEN
ENGINEERS
1715 NORTH WESTSHORE BOULEVARD
TAMPA, FLORIDA 33607-4135

DESIGNED RZ
DRAWN AF
CHECKED BBK

APPROVED _____ DATE _____
_____ DATE _____
GREELEY AND HANSEN, ENGINEERS

NO.	DATE	APPD	REVISION
3	8/1/96		RECORD DWG REVISIONS

SCALE: NOT TO SCALE

CITY OF TAMPA, FLORIDA
HOOKERS POINT WASTEWATER TREATMENT PLANT
PLANT EXPANSION
PHASE I DIVISION 5H3B
STANDBY POWER AND SLUDGE STORAGE FACILITIES

GENERAL
ELECTRICAL
SCHEMATIC DIAGRAMS
13.2KV INDOOR SWITCHGEAR NO. 2 – MODIFICATIONS

See Supplemental Drawing SD-51

PROJ NO. 202G
DWG AE12
SHEET
DATE DECEMBER 1991 REV 3

5H3B_0AE-012

FILE: H3B-AE12 SCALE: 1:1 09/05, 1996 at 14:26 - *13_s4h (Hardware Lock)*

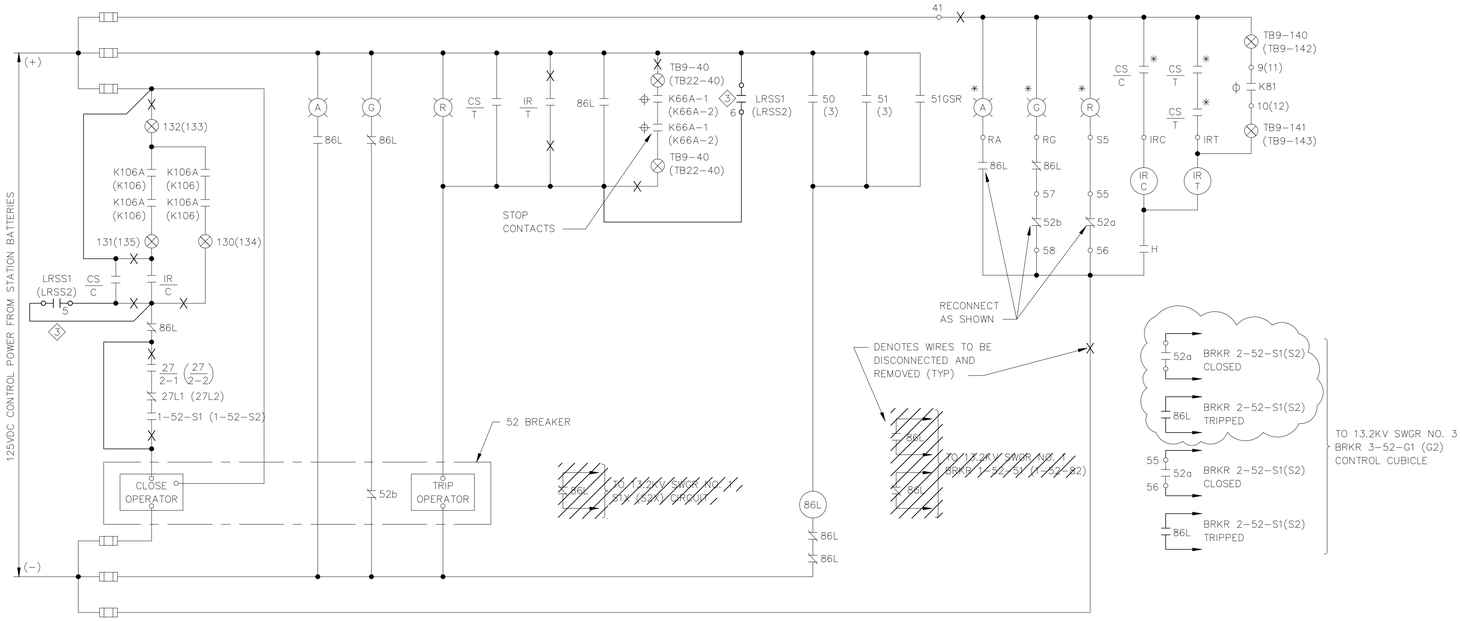

SYMBOL:

- ③ DENOTES DEVICE LOCATED IN 13.2KV SWITCHGEAR NO. 3
- ⌖ DENOTES DEVICE LOCATED EXISTING GENERATOR CONTROL CONSOLE
- ϕ DENOTES DEVICE LOCATED IN EXISTING AUTO SYNCH CONSOLE
- ✱ DENOTES DEVICE LOCATED IN EXISTING PROCESS CONTROL CONSOLE IN MAIN PUMPING STATION

MODIFICATIONS TO EXISTING CONTROLS FOR DISTRIBUTIONS BREAKER 2-52-S1

(SIMILAR FOR DISTRIBUTION BREAKER 2-52-S2)

REVISES DWG AE12

GREELEY AND HANSEN ENGINEERS 4350 WEST CYPRESS STREET TAMPA, FLORIDA 33607-4135	DESIGNED RZ DRAWN AF CHECKED BBK	APPROVED DATE DATE GREELEY AND HANSEN, ENGINEERS	NO.	DATE	APPD	REVISION	SCALE NOT TO SCALE	CITY OF TAMPA, FLORIDA HOOKERS POINT WASTEWATER TREATMENT PLANT PLANT EXPANSION PHASE I DIVISION 5H3B STANDBY POWER AND SLUDGE STORAGE FACILITIES	GENERAL ELECTRICAL SCHEMATIC DIAGRAMS 13.2KV INDOOR SWITCHGEAR NO. 2 – MODIFICATIONS	PROJ NO. 202G DWG SD-51 SHEET DATE DECEMBER 1991 REV 0

5H3B_0AE-012A

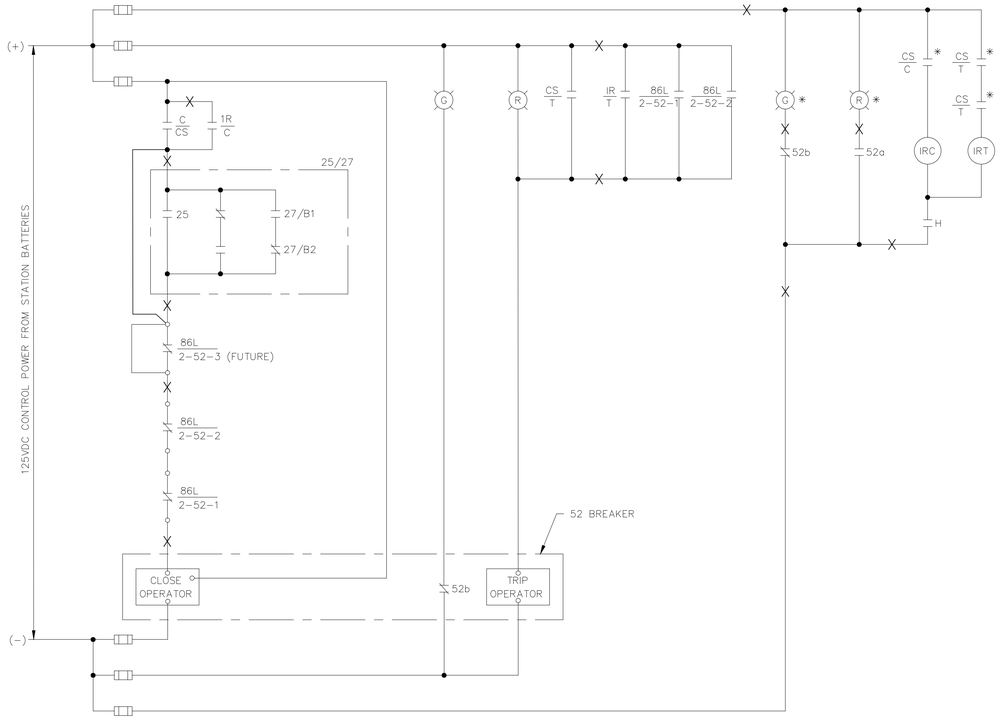

MODIFICATIONS TO EXISTING CONTROLS FOR TIE BREAKER 2-52-TIE

(BREAKER TO REMAIN AS SPARE)

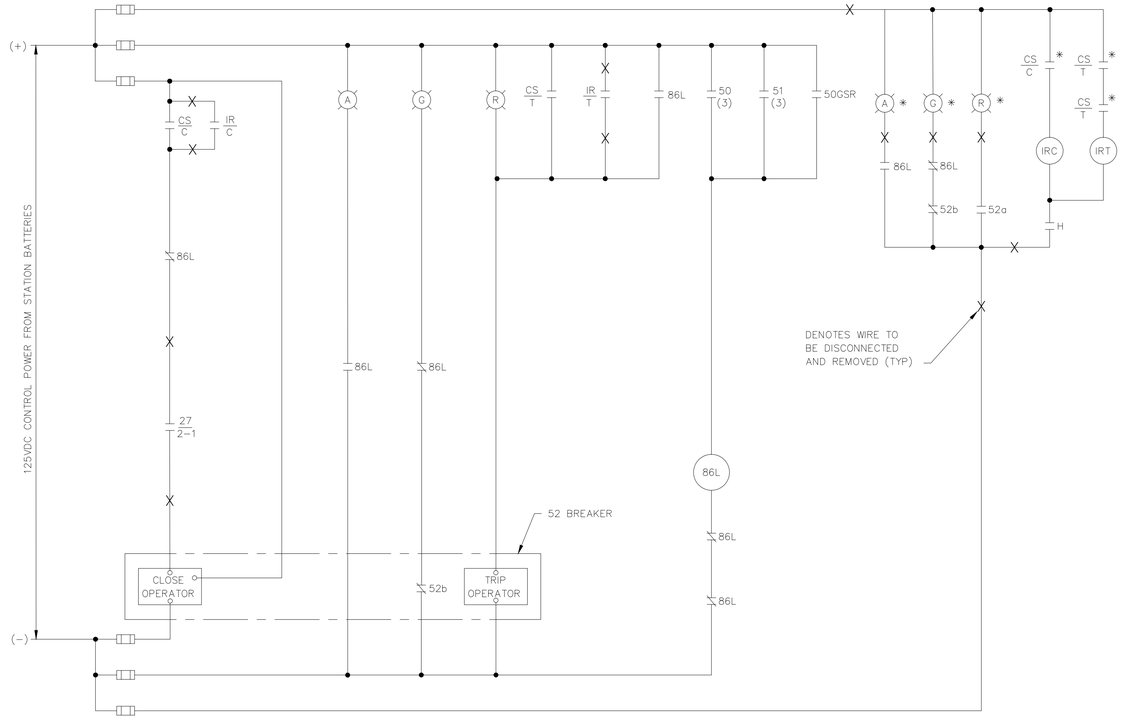

MODIFICATIONS TO EXISTING CONTROLS FOR DISTRIBUTION BREAKER 2-52-S3

(BREAKER TO REMAIN AS SPARE)

SYMBOL:

* DENOTES DEVICE LOCATED IN EXISTING PROCESS CONTROL CONSOLE IN MAIN PUMPING STATION

RECORD DRAWING

THIS RECORD DRAWING IS NOT WARRANTED BUT IS BELIEVED TO REPRESENT CONDITIONS UPON COMPLETION OF CONSTRUCTION WITHIN REASONABLE TOLERANCES, BASED UPON THE INFORMATION FURNISHED TO THE ENGINEER PERTAINING TO CHANGES MADE DURING CONSTRUCTION.

GREELEY AND HANSEN
ENGINEERS
1715 NORTH WESTSHORE BOULEVARD
TAMPA, FLORIDA 33607-4135

DESIGNED RZ
DRAWN ATK
CHECKED BBK

APPROVED _____ DATE _____
_____ DATE _____
GREELEY AND HANSEN, ENGINEERS

NO.	DATE	APPD	REVISION
3	8/1/96		RECORD DWG REVISIONS

SCALE
NOT TO SCALE

CITY OF TAMPA, FLORIDA
HOOKERS POINT WASTEWATER TREATMENT PLANT
PLANT EXPANSION
PHASE I DIVISION 5H3B
STANDBY POWER AND SLUDGE STORAGE FACILITIES

GENERAL
ELECTRICAL
SCHEMATIC DIAGRAMS
13.2KV INDOOR SWITCHGEAR NO.2 - MODIFICATIONS

PROJ NO. 202G
DWG AE13
SHEET
DATE DECEMBER 1991 REV 3

5H3B_0AE-013

FILE: H3B-AE13 SCALE: 1:1 09/05, 1996 at 14:31 - +13_c4h (Hardware Lock)*

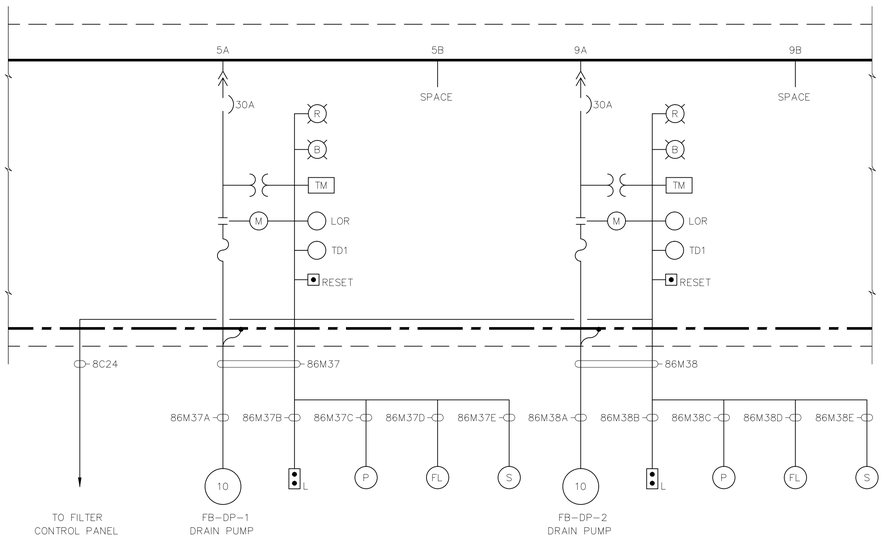

MCC-86 PARTIAL ONE LINE DIAGRAM

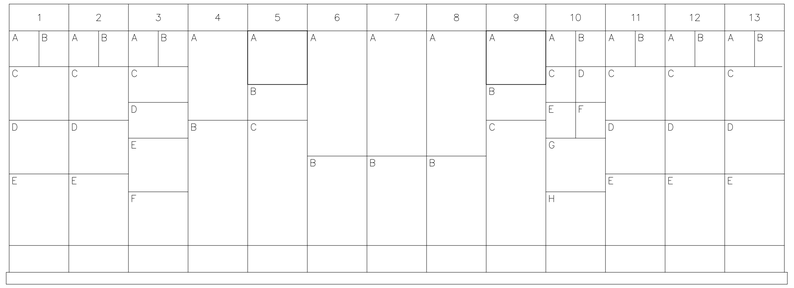

MCC-86 FRONT ELEVATION

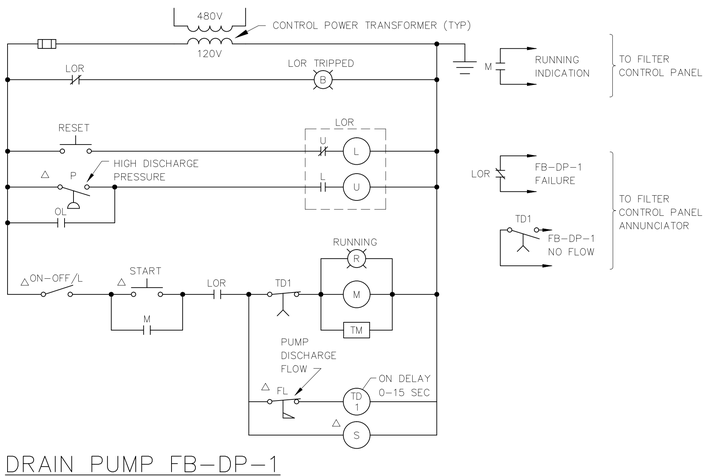

DRAIN PUMP FB-DP-1

SIMILAR FOR FB-DP-2

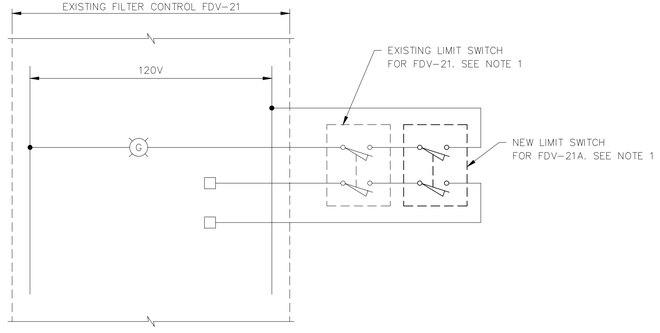

EXISTING FILTER CONTROL FDV-21
IN FILTER BUILDING NO. 2
PARTIAL SCHEMATIC

TYPICAL FOR FDV 22 THRU 26 AND FDV-31 THRU 36
SEE NOTE 1

NOTE:

1. FURNISH AND INSTALL A NEW LIMIT SWITCH WITH TWO NORMALLY OPEN CONTACTS ON THE NEW FILTER DRAIN VALVES. WIRE EACH CONTACT FROM THE NEW LIMIT SWITCH FDV-21A IN SERIES WITH THE NORMALLY OPEN CONTACTS FROM THE EXISTING FILTER DRAIN VALVE LIMIT SWITCH.

RECORD DRAWING

THIS RECORD DRAWING IS NOT WARRANTED BUT IS BELIEVED TO REPRESENT CONDITIONS UPON COMPLETION OF CONSTRUCTION WITHIN REASONABLE TOLERANCES, BASED UPON THE INFORMATION FURNISHED TO THE ENGINEER PERTAINING TO CHANGES MADE DURING CONSTRUCTION.

FILE: H3B-AE14 SCALE: 1:1 09/17, 1996 at 07:34 - *13_c4h (Hardware Lock)*

GREELEY AND HANSEN ENGINEERS 1715 NORTH WESTSHORE BOULEVARD TAMPA, FLORIDA 33607-4135	DESIGNED CSC DRAWN AF CHECKED BBK	APPROVED _____ DATE _____ _____ DATE _____ GREELEY AND HANSEN, ENGINEERS	2 8/1/96 RECORD DWG REVISIONS NO. DATE APPD REVISION	SCALE NOT TO SCALE	CITY OF TAMPA, FLORIDA HOOKERS POINT WASTEWATER TREATMENT PLANT PLANT EXPANSION PHASE I DIVISION 5H3B STANDBY POWER AND SLUDGE STORAGE FACILITIES	GENERAL ELECTRICAL MCC-86 ONE LINE DIAGRAM SCHEMATIC DIAGRAMS	See Supplemental Drawing SD-44

PROJ NO. 202G
DWG AE14
SHEET
DATE DECEMBER 1991 REV 2

5H3B_0AE-014

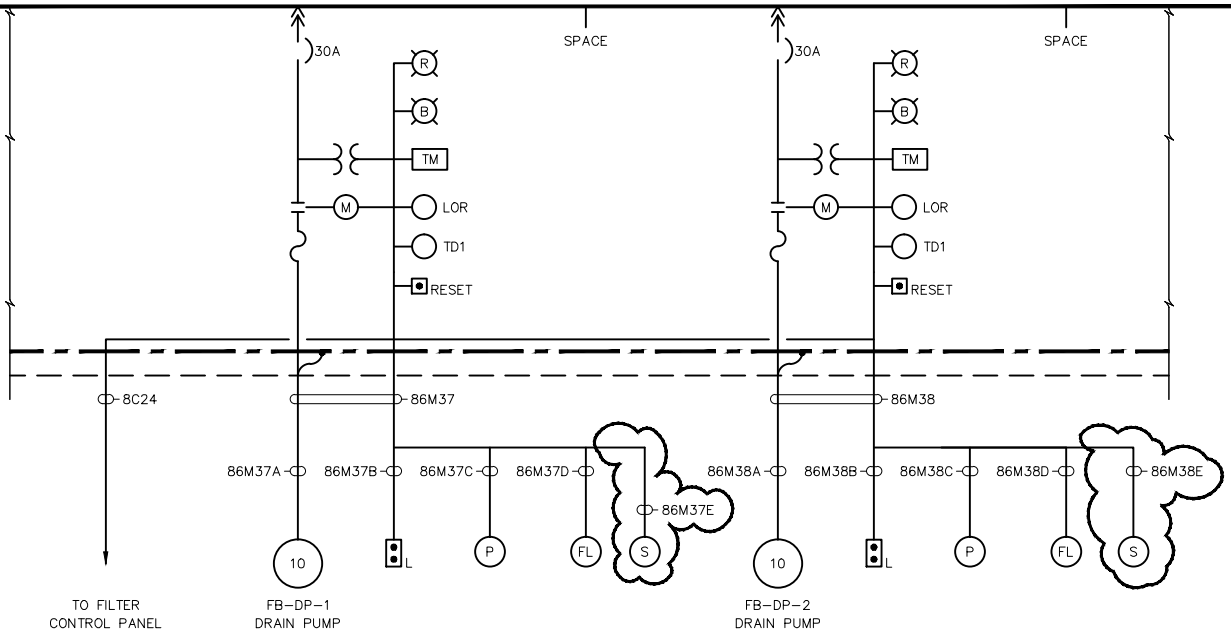

MCC-86 PARTIAL ONE LINE DIAGRAM

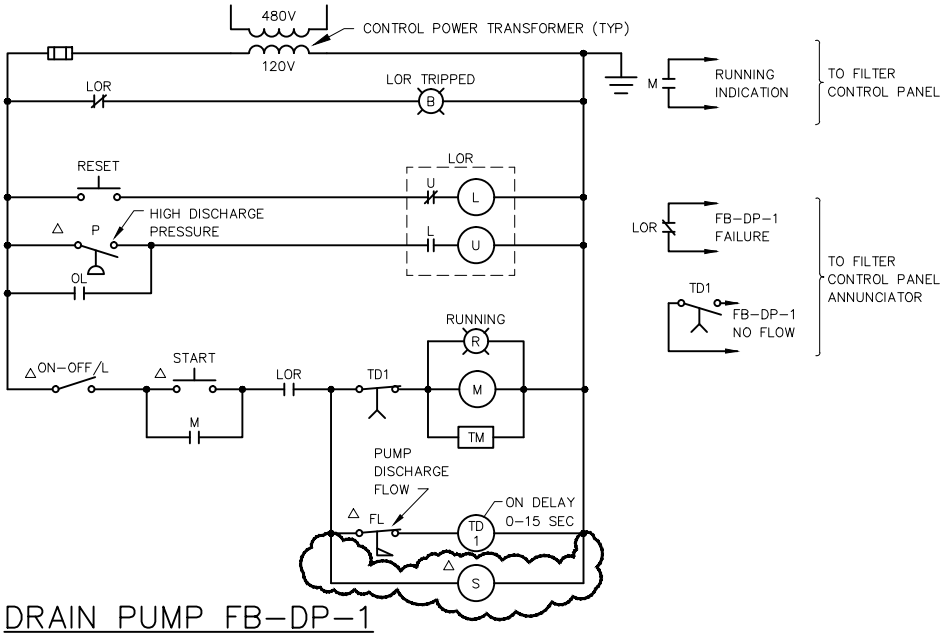

DRAIN PUMP FB-DP-1

SIMILAR FOR FB-DP-2

REVISES DWG AE14

DES MMN	CKD BBK					H.P.W.W.T.P.
DR GR	APPD					DIVISION 5H3B
GREELEY AND HANSEN ENGINEERS TAMPA, FLORIDA 34607						SD-44
		NO.	DATE	APPD	REVISION	DATE NOV 94 NO. 0

5H3B_0AE-014A

EXIT SIGN FIXTURE SCHEDULE

MARK	MANUFACTURER OR EQUAL	CATALOG NUMBER	VOLTS	LAMPS			MOUNTING		DESCRIPTION
				NO.	WATTS.	TYPE.			
XM	SURE LITES	EP-UMB-EX-RWFP-P	120	2	6	FLUORESCENT	SURFACE	WALL	NEMA 4X, 90 MINUTE CAPACITY, SEALED NICKEL CADMIUM BATTERY WITH 10 YEAR LIFE EXPECTANCY
XF	ALKCO	EAX-12-FL-12	120	2	8	FLUORESCENT F8T5	PENDANT	CLG	SINGLE FACE WITH DOWNLIGHT, INTEGRAL EMERGENCY BATTERY PACKAGE, GLASS PANEL, 6" RED LETTERS ON WHITE BACKROUND, DURONODIC 313 BRONZE FINISH

LIGHTING FIXTURE SCHEDULE

MARK	MANUFACTURER OR EQUAL	CATALOG NUMBER	VOLTS	LAMPS			MOUNTING		DESCRIPTION
				NO.	WATTS.	TYPE.			
EH	HOLOPHANE	EH-10-2C	277	2	35	12 VDC PAR 36	SURFACE	WALL	NEMA 4X, TWO ADJUSTABLE LAMP HEADS, 90 MINUTE CAPACITY SEALED BATTERY WET LOCATION
FB	METALUX	VT296DR-277-GL-WL-VR	277	2	60	FLUORESCENT F96T12/CW /WM	SURFACE	CLG	INDUSTRIAL VAPORTIGHT FLUORESCENT HIGH IMPACT LENS SUITABLE FOR WET LOCATIONS AND CHEMICAL RESISTANCE
FB1	METALUX	VT296DR-277-GL-EL4 -WL-VR	277	2	60	FLUORESCENT F96T12/CW /WM	SURFACE	CLG	INDUSTRIAL VAPORTIGHT FLUORESCENT HIGH IMPACT LENS SUITABLE FOR WET LOCATIONS AND CHEMICAL RESISTANCE WITH EMERGENCY BATTERY PACK
FH1	KENALL	7280-277-EL-9111(GLR)	277	2	34	FLUORESCENT F40T12/CW/WM	SURFACE	WALL	WALL BRACKET FLUORESCENT HIGH IMPACT LENS SUITABLE FOR WET LOCATIONS, WITH EMERGENCY BATTERY PACK
FG	METALUX	VT296DR-277-GL-WL-VR	277	2	60	FLUORESCENT F96T12/CW /WM	PENDANT	CLG	INDUSTRIAL VAPORTIGHT FLUORESCENT HIGH IMPACT LENS SUITABLE FOR WET LOCATIONS AND CHEMICAL RESISTANCE
FG1	METALUX	VT296DR-277-GL-EL4 -WL-VR	277	2	60	FLUORESCENT F96T12/CW /WM	PENDANT	CLG	INDUSTRIAL VAPORTIGHT FLUORESCENT HIGH IMPACT LENS SUITABLE FOR WET LOCATIONS AND CHEMICAL RESISTANCE WITH EMERGENCY BATTERY PACK
FK	LIGHTING FIXTURE: GENERAL ELECTRIC	PF4S-24-S-4-H-1-6X6-DB-F	277	1	250	HPS	POLE	20'	FLOOD TYPE LUMINAIRES MOUNTED ON 20' HIGH ALUMINUM POLE. AIM FIXTURES AT AN ANGLE OF 24° WITH HORIZONTAL PLANE. FIXTURE RATED FOR 110 MPH STEADY WINDS WITH 1.3 GUST
	POLE: UNION METAL	171-156-0640-200-F-BRZ							
GA	GENERAL ELECTRIC	W1LR-05-S-4H1LS-N4DB-F	277	1	50	HPS	SURFACE	WALL	WALL MOUNTED AREA LIGHT, WEATHERPROOF, LEXAN LENS
GM	HOLOPHANE	PTB-400MH-27-L-P-635-F1	277	1	400	MH	PENDANT	CLG	INDUSTRIAL FIXTURE WITH ENCLOSED PRISMATIC GLASS REFLECTOR, INTEGRAL BALLAST
GM1	HOLOPHANE	PTB-400MH-27-L-P-635-F1-EM	277	1	400	MH	PENDANT	CLG	INDUSTRIAL FIXTURE WITH ENCLOSED PRISMATIC GLASS REFLECTOR, INTEGRAL BALLAST HALOGEN STANDBY LAMP
CG	HUBBELL	EDL042R-EPDR-E4	277	2	34	FLUORESCENT F40T12/LW/ RS/WM11	SURFACE	CLG	48" LONG WRAPAROUND FIXTURE WITH MOLDED IMPACT RESISTANT ABS PLASTIC FULLY GASKETED HOUSING, ACRYLIC DIFFUSER
CH	HUBBELL	EDL042R-EPDR-E4	277	2	34	FLUORESCENT F40T12/LW/ RS/WM11	SURFACE	CLG	SIMILAR TO FIXTURE CG EXCEPT WITH EMERGENCY BATTERY PACK
HA	APPLETON	EHL100N	120	1	100W A-19	INCANDESCENT	–	–	EXPLOSION-PROOF PORTABLE HANDLAMP WITH 50 FEET OF 3/C#14 SO CORD
GL	HOLOPHANE	PTB-250MH-27-L-P-635-F1	277	1	400	MH	SURFACE	CLG	INDUSTRIAL FIXTURE WITH ENCLOSED PRISMATIC GLASS REFLECTOR, INTEGRAL BALLAST AND POWER HOOK

EMTEC Corporation
CONSULTING ENGINEERS
1723 W. KENNEDY BOULEVARD
SUITE 210
TAMPA, FLORIDA 33606

RECORD DRAWING

THIS RECORD DRAWING IS NOT WARRANTED BUT IS BELIEVED TO REPRESENT CONDITIONS UPON COMPLETION OF CONSTRUCTION WITHIN REASONABLE TOLERANCES, BASED UPON THE INFORMATION FURNISHED TO THE ENGINEER PERTAINING TO CHANGES MADE DURING CONSTRUCTION.

GREELEY AND HANSEN
ENGINEERS
1715 NORTH WESTSHORE BOULEVARD
TAMPA, FLORIDA 33607-4135

DESIGNED RG
DRAWN RG
CHECKED RJJ

APPROVED _____ DATE _____
_____ DATE _____
GREELEY AND HANSEN, ENGINEERS

NO.	DATE	APPD	REVISION
3	8/1/96		RECORD DWG REVISIONS

SCALE
8 0 8 16 FT
1/8"=1'-0"

CITY OF TAMPA, FLORIDA
HOOKERS POINT WASTEWATER TREATMENT PLANT
PLANT EXPANSION
PHASE I DIVISION 5H3B
STANDBY POWER AND SLUDGE STORAGE FACILITIES

ELECTRICALS
GENERAL
LIGHTING AND FIXTURE SCHEDULE

PROJ NO. 202G
DWG AE16
SHEET
DATE DECEMBER 1991 REV 3

5H3B_0AE-016

PLE: H3B-AE16 SCALE: 1:96 09/06, 1996 at 08:03 - *13_4in (Hardware Lock)*

CONDUIT NUMBER & SIZE		CONDUCTOR QUANTITY & SIZE	FROM	TO	REMARKS
			13.2 KV FEEDERS		
1H3B3	4	3–350MCM, 15 KV & 1#2, 600V GND	TRANSFORMER T–3B–2	TRANSFORMER T–3B–3	
1H9A2	4	3–350MCM, 15 KV & 1#2, 600V GND	MANHOLE MH–28	TRANSFORMER T–9A–2	
1H9B2	4	3–350MCM, 15 KV & 1#2, 600V GND	MANHOLE MH–28	TRANSFORMER T–9B–2	
3HS1A	4	3–500MCM, 15 KV & 1#1/0, 600V GND	13.2 KV SWGR NO. 3	EX. 13.2 KV SWGR NO. 1	BUS NO. 1
3HS1B	4	3–500MCM, 15 KV & 1#1/0, 600V GND	13.2 KV SWGR NO. 3	EX. 13.2 KV SWGR NO. 1	BUS NO. 1
3HS2A	4	3–500MCM, 15 KV & 1#1/0, 600V GND	13.2 KV SWGR NO. 3	EX. 13.2 KV SWGR NO. 1	BUS NO. 2
3HS2B	4	3–500MCM, 15 KV & 1#1/0, 600V GND	13.2 KV SWGR NO. 3	EX. 13.2 KV SWGR NO. 1	BUS NO. 2
			EXISTING 13.2 KV FEEDERS		
1H3B3		3–350MCM, 15 KV, AL & 1#4/0, 600V, AL GND	EX. 13.2KV SWGR NO. 1	EX. MANUAL TRANSFER SWITCH TS–3B–3	EXISTING CABLES TO BE REMOVED
1H3B3–TS		3–350MCM, 15 KV, AL & 1#4/0, 600V, AL GND	EX. MANUAL TRANSFER SWITCH TS–3B–3	EX TRANSFORMER T–3B–3	EXISTING CABLES TO BE REMOVED
1H9A1		3–350MCM, 15 KV & 1#2, 600V GND	EX. 13.2KV SWGR NO. 1	EX TRANSFORMER T–9A–3	EXISTING CABLES FOR INFORMATION ONLY
1H9B1		3–350MCM, 15 KV & 1#2, 600V GND	EX. 13.2KV SWGR NO. 1	EX TRANSFORMER T–9B–3	EXISTING CABLES FOR INFORMATION ONLY
2HS1		3–350MCM, 15 KV, AL & 1#4/0, 600V, AL GND	EX. 13.2KV SWGR NO. 2	EX. 13.2KV SWGR NO. 1	EXISTING CABLES TO BE REMOVED
2HS2		3–350MCM, 15 KV, AL & 1#4/0, 600V, AL GND	EX. 13.2KV SWGR NO. 2	EX. 13.2KV SWGR NO. 1	EXISTING CABLES TO BE REMOVED
2HS3		3#1/0, 15 KV, AL & 1#1/0, 600V, AL GND	EX. 13.2KV SWGR NO. 2	EX. MANUAL TRANSFER SWITCH TS–3B–3	EXISTING CABLES TO BE REMOVED

CONDUIT NUMBER & SIZE		CONDUCTOR QUANTITY & SIZE	FROM	TO	REMARKS
			MOTOR CONTROL CENTER MCC–86		
86M37	1–1/4	3#12, 7#14 & 1#12 GND	MCC–86	JB NEAR FB–DP–1	
86M37A	3/4	3#12 & 1#12 GND	JB NEAR FB–DP–1	FB–DP–1	
86M37B	3/4	2#14 & 1#12 GND	JB NEAR FB–DP–1	PUSHBUTTON STATION	
86M37C	3/4	2#14 & 1#12 GND	JB NEAR FB–DP–1	PRESSURE SWITCH	
86M37D	3/4	2#14 & 1#12 GND	JB NEAR FB–DP–1	FLOW SWITCH	
86M37E	3/4	2#14 & 1#12 GND	JB NEAR FB–DP–1	SOLENOID VALVE	
86M38	1–1/4	3#12, 7#14 & 1#12 GND	MCC–86	JB NEAR FB–DP–2	
86M38A	3/4	3#12 & 1#12 GND	JB NEAR FB–DP–2	FB–DP–2	
86M38B	3/4	2#14 & 1#12 GND	JB NEAR FB–DP–2	PUSHBUTTON STATION	
86M38C	3/4	2#14 & 1#12 GND	JB NEAR FB–DP–2	PRESSURE SWITCH	
86M38D	3/4	2#14 & 1#12 GND	JB NEAR FB–DP–2	FLOW SWITCH	
86M38E	3/4	2#14 & 1#12 GND	JB NEAR FB–DP–2	SOLENOID VALVE	
8C24	1–1/4	1–12/C#14 & 1#14 GND	MCC–86	FILTER CONTROL PANEL	
8C25	3/4	4#14 & 1#14 GND	EXIST FDV–21 LIMIT SW	FDV–21A LIMIT SWITCH	
8C26	3/4	4#14 & 1#14 GND	EXIST FDV–22 LIMIT SW	FDV–22A LIMIT SWITCH	
8C27	3/4	4#14 & 1#14 GND	EXIST FDV–23 LIMIT SW	FDV–23A LIMIT SWITCH	
8C28	3/4	4#14 & 1#14 GND	EXIST FDV–24 LIMIT SW	FDV–24A LIMIT SWITCH	
8C29	3/4	4#14 & 1#14 GND	EXIST FDV–25 LIMIT SW	FDV–25A LIMIT SWITCH	
8C30	3/4	4#14 & 1#14 GND	EXIST FDV–26 LIMIT SW	FDV–26A LIMIT SWITCH	
8C31	3/4	4#14 & 1#14 GND	EXIST FDV–31 LIMIT SW	FDV–31A LIMIT SWITCH	
8C32	3/4	4#14 & 1#14 GND	EXIST FDV–32 LIMIT SW	FDV–32A LIMIT SWITCH	
8C33	3/4	4#14 & 1#14 GND	EXIST FDV–33 LIMIT SW	FDV–33A LIMIT SWITCH	
8C34	3/4	4#14 & 1#14 GND	EXIST FDV–34 LIMIT SW	FDV–34A LIMIT SWITCH	
8C35	3/4	4#14 & 1#14 GND	EXIST FDV–35 LIMIT SW	FDV–35A LIMIT SWITCH	
8C36	3/4	4#14 & 1#14 GND	EXIST FDV–36 LIMIT SW	FDV–36A LIMIT SWITCH	

RECORD DRAWING

THIS RECORD DRAWING IS NOT WARRANTED BUT IS BELIEVED TO REPRESENT CONDITIONS UPON COMPLETION OF CONSTRUCTION WITHIN REASONABLE TOLERANCES, BASED UPON THE INFORMATION FURNISHED TO THE ENGINEER PERTAINING TO CHANGES MADE DURING CONSTRUCTION.

PLEE H3B-4617 SCALE: 1:1 09/06, 1996 at 08:11 – *13_4th (Hardware Lock)*

GREELEY AND HANSEN
ENGINEERS
1715 NORTH WESTSHORE BOULEVARD
TAMPA, FLORIDA 33607–4135

DESIGNED CSC
DRAWN BBK
CHECKED BBK

APPROVED
_____ DATE _____
_____ DATE _____
GREELEY AND HANSEN, ENGINEERS

NO.	DATE	APPD	REVISION
4	8/1/96		RECORD DWG REVISIONS

SCALE
NOT TO SCALE

CITY OF TAMPA, FLORIDA
HOOKERS POINT WASTEWATER TREATMENT PLANT
PLANT EXPANSION
PHASE I DIVISION 5H3B
STANDBY POWER AND SLUDGE STORAGE FACILITIES

GENERAL
ELECTRICAL
CONDUIT AND CABLE SCHEDULE

PROJ NO. 202G
DWG AE17
SHEET
DATE DECEMBER 1991 REV 4

5H3B_0AE-017

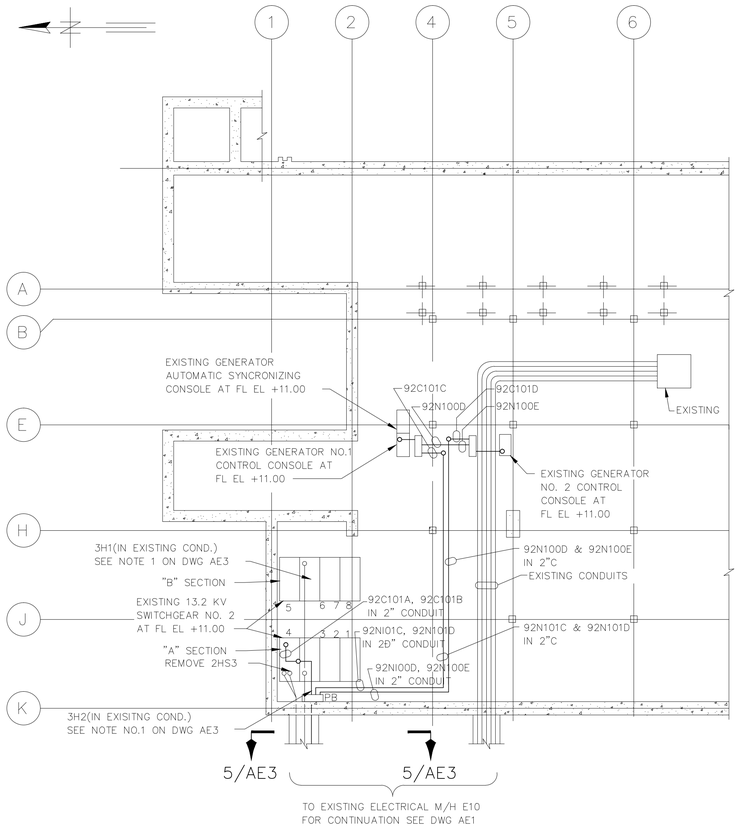

MAIN PUMPING STATION
PARTIAL PLAN AT EL −2.00

SCALE: ?3?32?=1'−0"

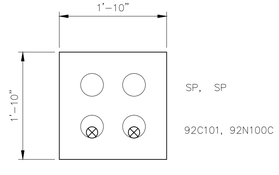

SECTION A

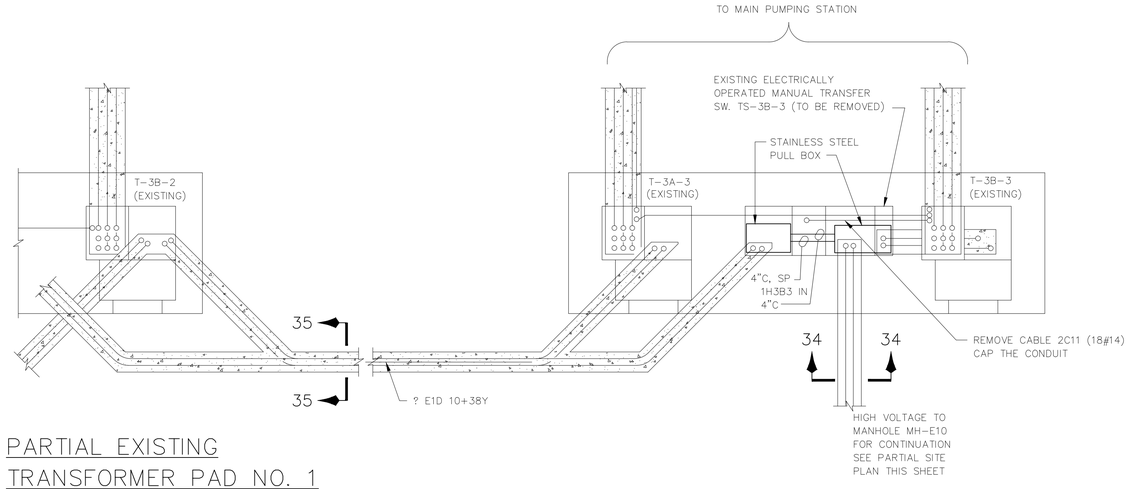

PARTIAL EXISTING
TRANSFORMER PAD NO. 1

SCALE: E""=1'−0"

EXISTING TRANSFORMER PAD NO. 2

SCALE: E""=1'−0"

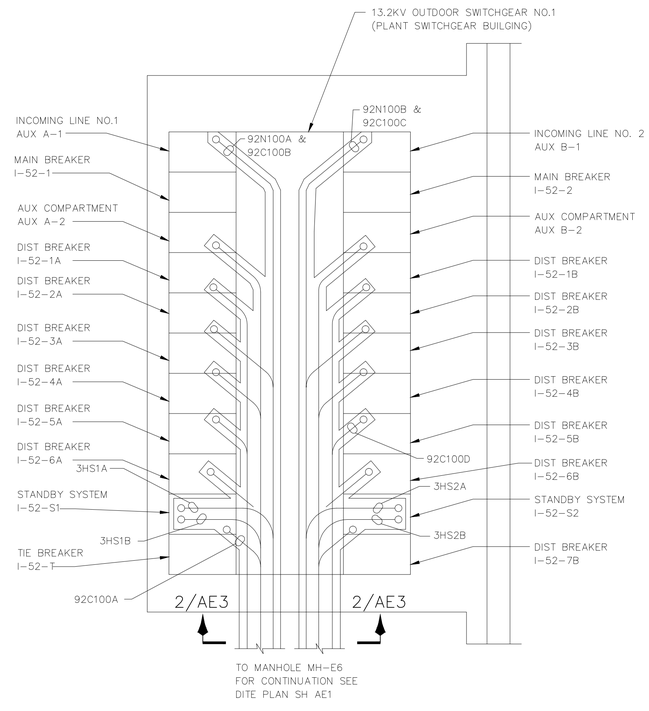

SECTIONAL PLAN−13.2KV
OUTDOOR SWITCHGEAR NO. 1

NOT TO SCALE

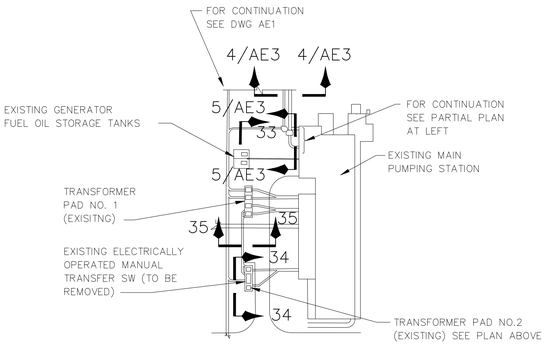

PARTIAL SITE PLAN

SCALE: 1"=100'

SECTION 33

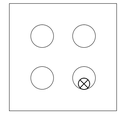

SECTION 35

SECTION 34

RECORD DRAWING

THIS RECORD DRAWING IS NOT WARRANTED BUT IS BELIEVED TO REPRESENT CONDITIONS UPON COMPLETION OF CONSTRUCTION WITHIN REASONABLE TOLERANCES, BASED UPON THE INFORMATION FURNISHED TO THE ENGINEER PERTAINING TO CHANGES MADE DURING CONSTRUCTION.

FILE: H3B−AE19.DWG 1:128 04/13/98 10:15 GH−A

GREELEY AND HANSEN
ENGINEERS
1715 NORTH WESTSHORE BOULEVARD
TAMPA, FLORIDA 33607−4135

DESIGNED GJ
DRAWN MSB
CHECKED BBK

APPROVED _____ DATE _____
_____ DATE _____
GREELEY AND HANSEN, ENGINEERS

NO.	DATE	APPD	REVISION
2	8/1/96		RECORD DWG REVISIONS

SCALE
8 0 8 16 24 FT 3/32"=1'−0"
4 0 4 8 12 FT 3/16"=1'−0"

CITY OF TAMPA, FLORIDA
HOOKERS POINT WASTEWATER TREATMENT PLANT
PLANT EXPANSION
PHASE I DIVISION 5H3B
STANDBY POWER AND SLUDGE STORAGE FACILITIES

GENERAL
ELECTRICAL
MISCELLANEOUS PLANS AND DETAILS

See Supplemental Drawing SD-54

PROJ NO. 202G
DWG AE19
SHEET
DATE DECEMBER 1991 REV 2

5H3B_0AE-019

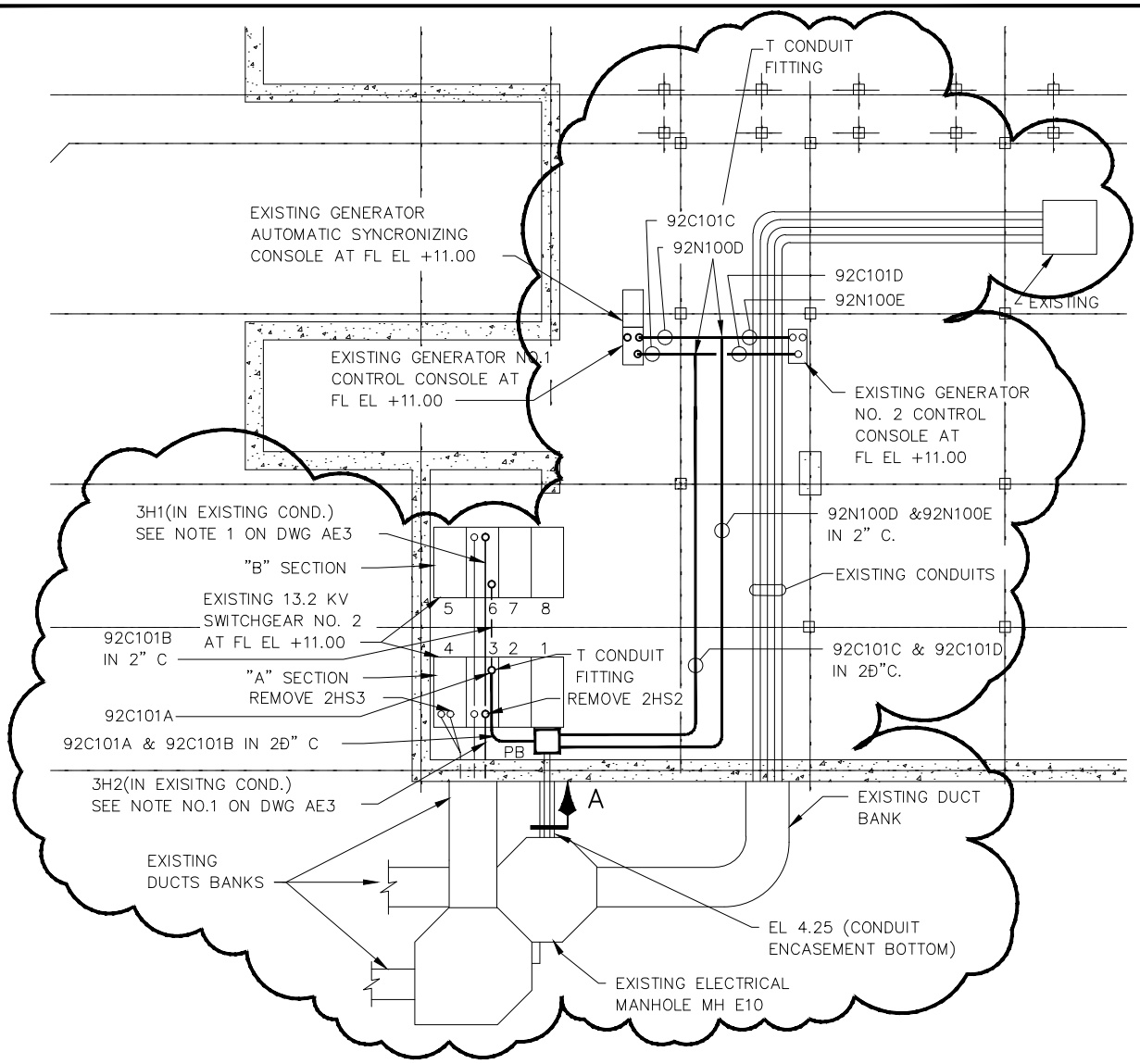

MAIN PUMPING STATION
PARTIAL PLAN AT EL −2.00

NOT TO SCALE

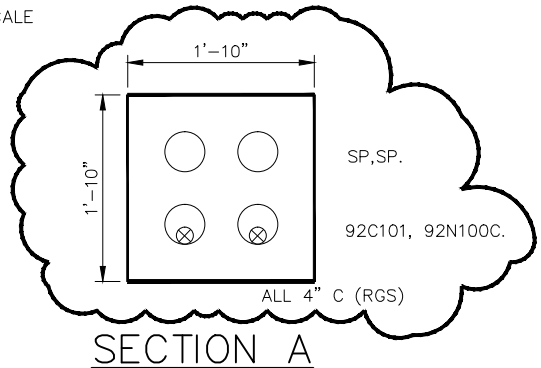

SECTION A

NOT TO SCALE

REVISES DWG AE19

DES BBK	CKD JG					H.P.W.W.T.P.	
DR GR	APPD					DIVISION 5H3B	
GREELEY AND HANSEN ENGINEERS TAMPA, FLORIDA 34607						SD−54	
		NO.	DATE	APPD	REVISION	DATE JAN 95	NO. 0

FILE: H:\AC\5H3B\SD\H3BSD54 SCALE: 1:11 01/23, 1995 at 09:21 *R11 c2*

5H3B_0AE-019A

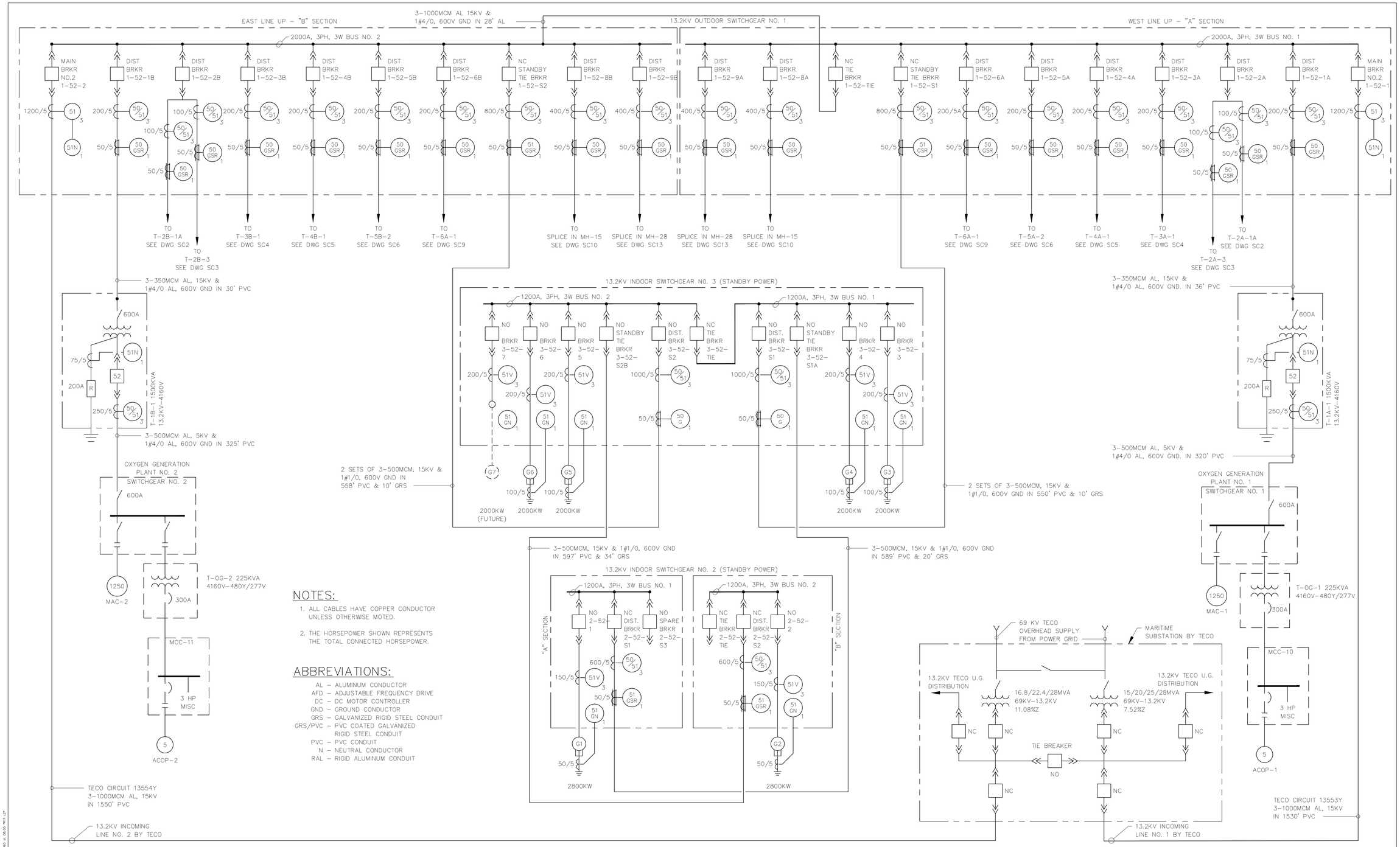

NOTES:

1. ALL CABLES HAVE COPPER CONDUCTOR UNLESS OTHERWISE MOTED.
2. THE HORSEPOWER SHOWN REPRESENTS THE TOTAL CONNECTED HORSEPOWER.

ABBREVIATIONS:

AL	– ALUMINUM CONDUCTOR
AFD	– ADJUSTABLE FREQUENCY DRIVE
DC	– DC MOTOR CONTROLLER
GND	– GROUND CONDUCTOR
GRS	– GALVANIZED RIGID STEEL CONDUIT
GRS/PVC	– PVC COATED GALVANIZED RIGID STEEL CONDUIT
PVC	– PVC CONDUIT
N	– NEUTRAL CONDUCTOR
RAL	– RIGID ALUMINUM CONDUIT

GREELEY AND HANSEN
ENGINEERS
4350 WEST CYPRESS STREET
TAMPA, FLORIDA 33607–4135

DESIGNED	BBK
DRAWN	BBK
CHECKED	BBK

APPROVED
_____ DATE _____
_____ DATE _____
GREELEY AND HANSEN, ENGINEERS

NO.	DATE	APPD	REVISION

SCALE
NO SCALE

CITY OF TAMPA, FLORIDA
HOOKERS POINT WASTEWATER TREATMENT PLANT
PLANT EXPANSION
PHASE I DIVISION 5H3B
STANDBY POWER AND SLUDGE STORAGE FACILITIES

ELECTRICAL
GENERAL
OVERALL ONE LINE DIAGRAM – PART A

PROJ NO. 202G
DWG SD–20
SHEET
DATE JANUARY 1993 REV 0

5H3B_0SD-020

FILE: TAMPA1A SCALE: 1=1 (1/2") 1993 at 08:05 "PRT1.d2"

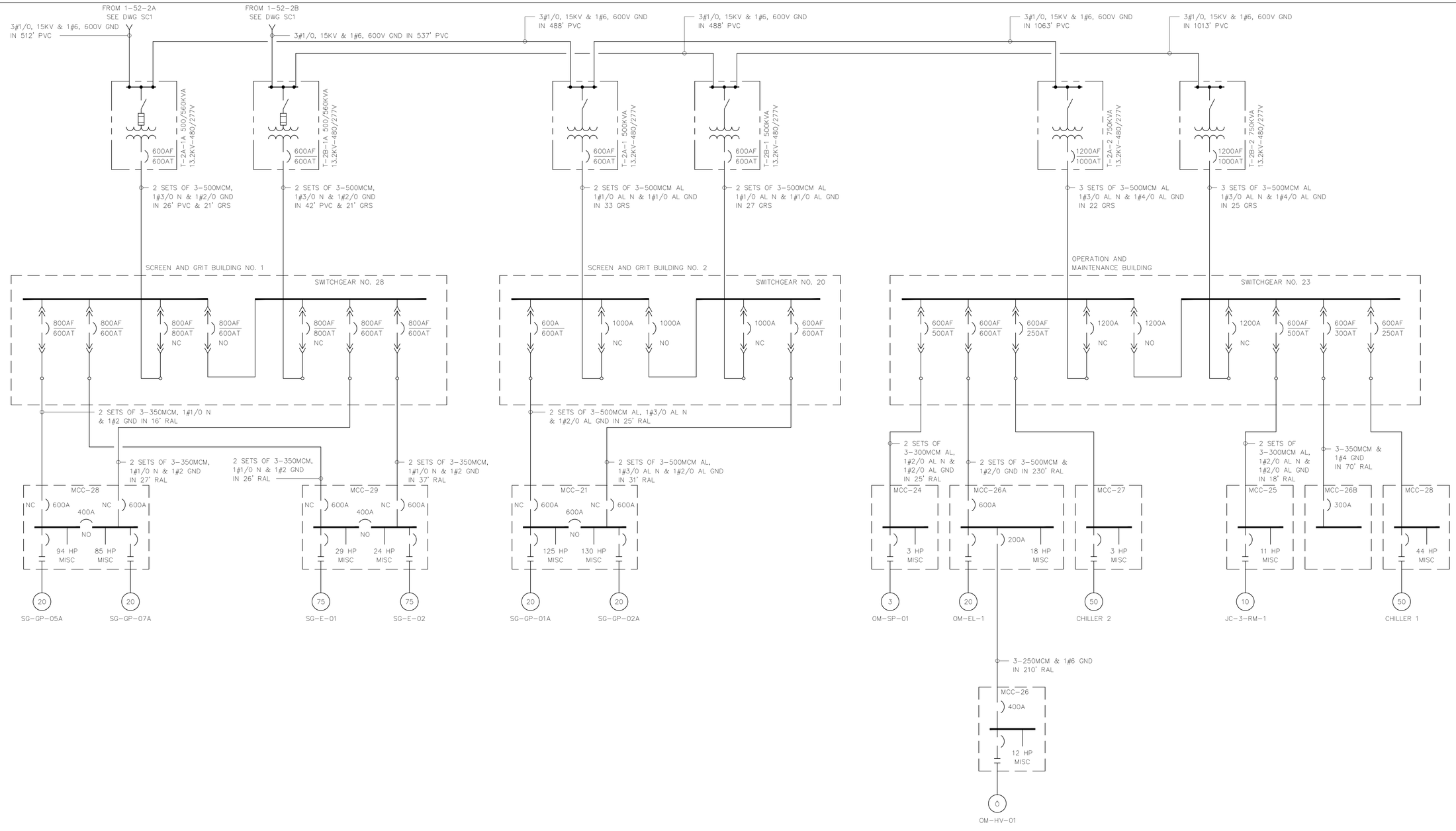

NOTE:

1. SEE DWG SC1 FOR NOTES AND ABBREVIATIONS

GREELEY AND HANSEN ENGINEERS 4350 WEST CYPRESS STREET TAMPA, FLORIDA 33607-4135	DESIGNED BBK DRAWN BBK CHECKED BBK	APPROVED _____ DATE _____ _____ DATE _____ GREELEY AND HANSEN, ENGINEERS	NO. / DATE / APPD / REVISION
SCALE NO SCALE	CITY OF TAMPA, FLORIDA HOOKERS POINT WASTEWATER TREATMENT PLANT PLANT EXPANSION PHASE I DIVISION 5H3B STANDBY POWER AND SLUDGE STORAGE FACILITIES	ELECTRICAL GENERAL OVERALL ONE LINE DIAGRAM – PART B1	PROJ NO. 202G DWG SD-21 SHEET DATE JANUARY 1993 REV 0

5H3B_0SD-021

FILE: TAMPA3R1 SCALE: 1.5 11/71, 1993 at 09:47 MST -07

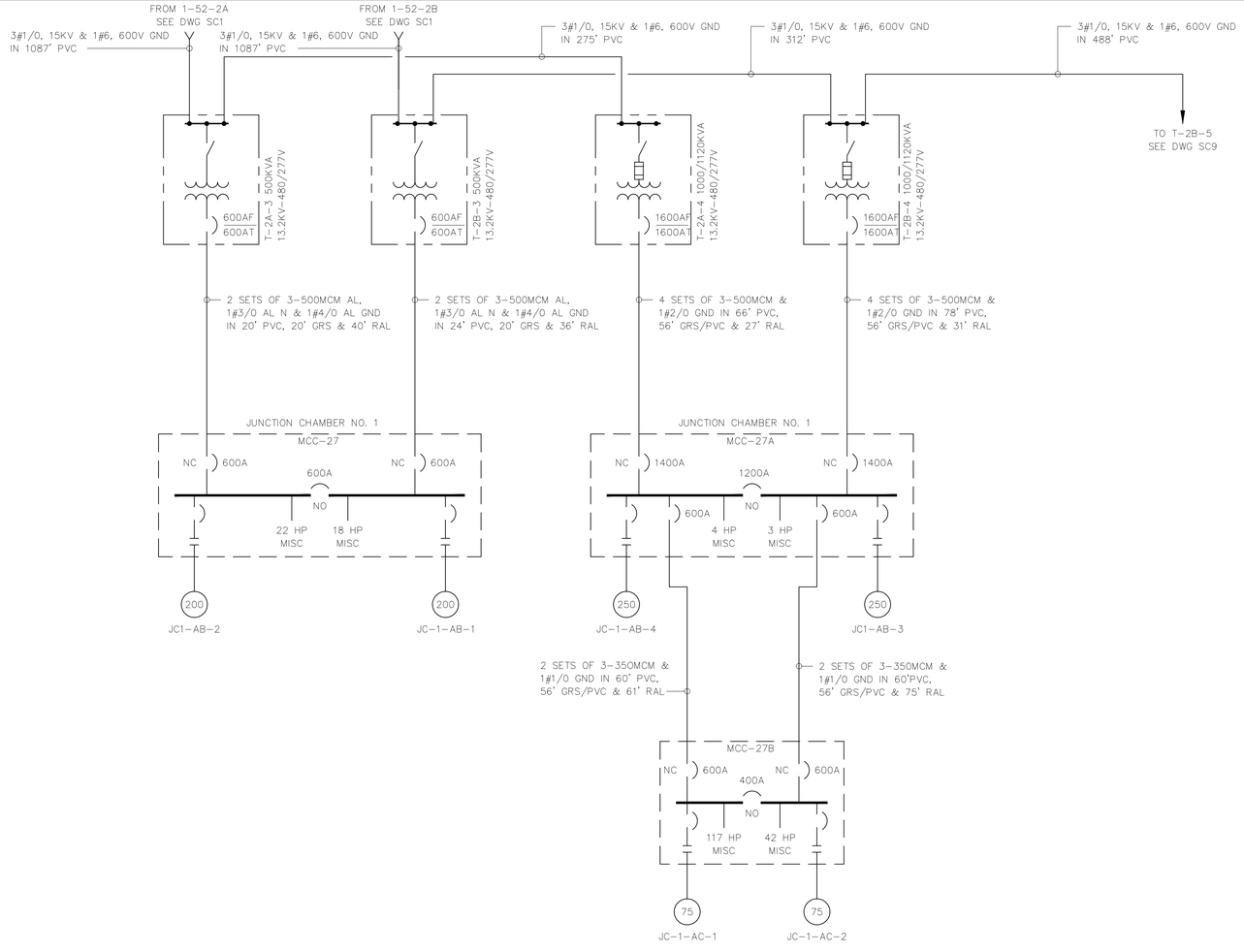

NOTE:

1. SEE DWG SC1 FOR NOTES AND ABBREVIATIONS

GREELEY AND HANSEN ENGINEERS 4350 WEST CYPRESS STREET TAMPA, FLORIDA 33607-4135	DESIGNED BBK DRAWN BBK CHECKED BBK	APPROVED DATE DATE GREELEY AND HANSEN, ENGINEERS	NO.	DATE	APPD	REVISION	SCALE NO SCALE

CITY OF TAMPA, FLORIDA
HOOKERS POINT WASTEWATER TREATMENT PLANT
PLANT EXPANSION
PHASE I DIVISION 5H3B
STANDBY POWER AND SLUDGE STORAGE FACILITIES

ELECTRICAL
GENERAL
OVERALL ONE LINE DIAGRAM – PATR B2

PROJ NO. 202G
DWG SD-22
SHEET
DATE JANUARY 1993 REV 0

5H3B_0SD-022

FILE: TAMP2B2 SCALE: 1:1 11/71, 1993 at 09:49 PRINT -2*

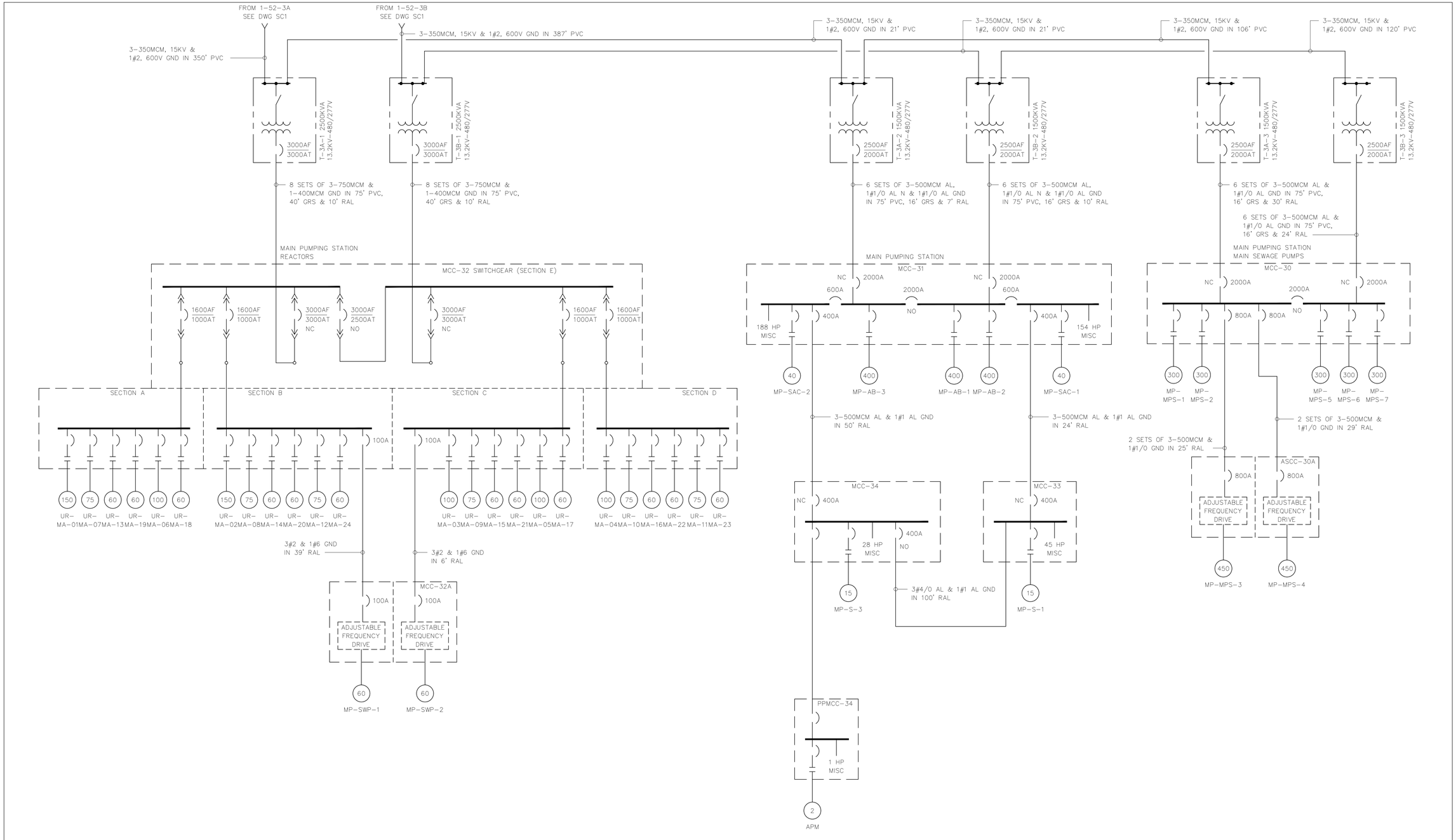

NOTE:

1. SEE DWG SC1 FOR NOTES AND ABBREVIATIONS

GREELEY AND HANSEN ENGINEERS 4350 WEST CYPRESS STREET TAMPA, FLORIDA 33607-4135	DESIGNED BBK DRAWN BBK CHECKED BBK	APPROVED _____ DATE _____ _____ DATE _____ GREELEY AND HANSEN, ENGINEERS	NO. / DATE / APPD / REVISION	SCALE NO SCALE	CITY OF TAMPA, FLORIDA HOOKERS POINT WASTEWATER TREATMENT PLANT PLANT EXPANSION PHASE I DIVISION 5H3B STANDBY POWER AND SLUDGE STORAGE FACILITIES	ELECTRICAL GENERAL OVERALL ONE LINE DIAGRAM - PART C	PROJ NO. 202G DWG SD-23 SHEET DATE JANUARY 1993 REV 0

FILE: 5H3BOSC SCALE

5H3B_0SD-023

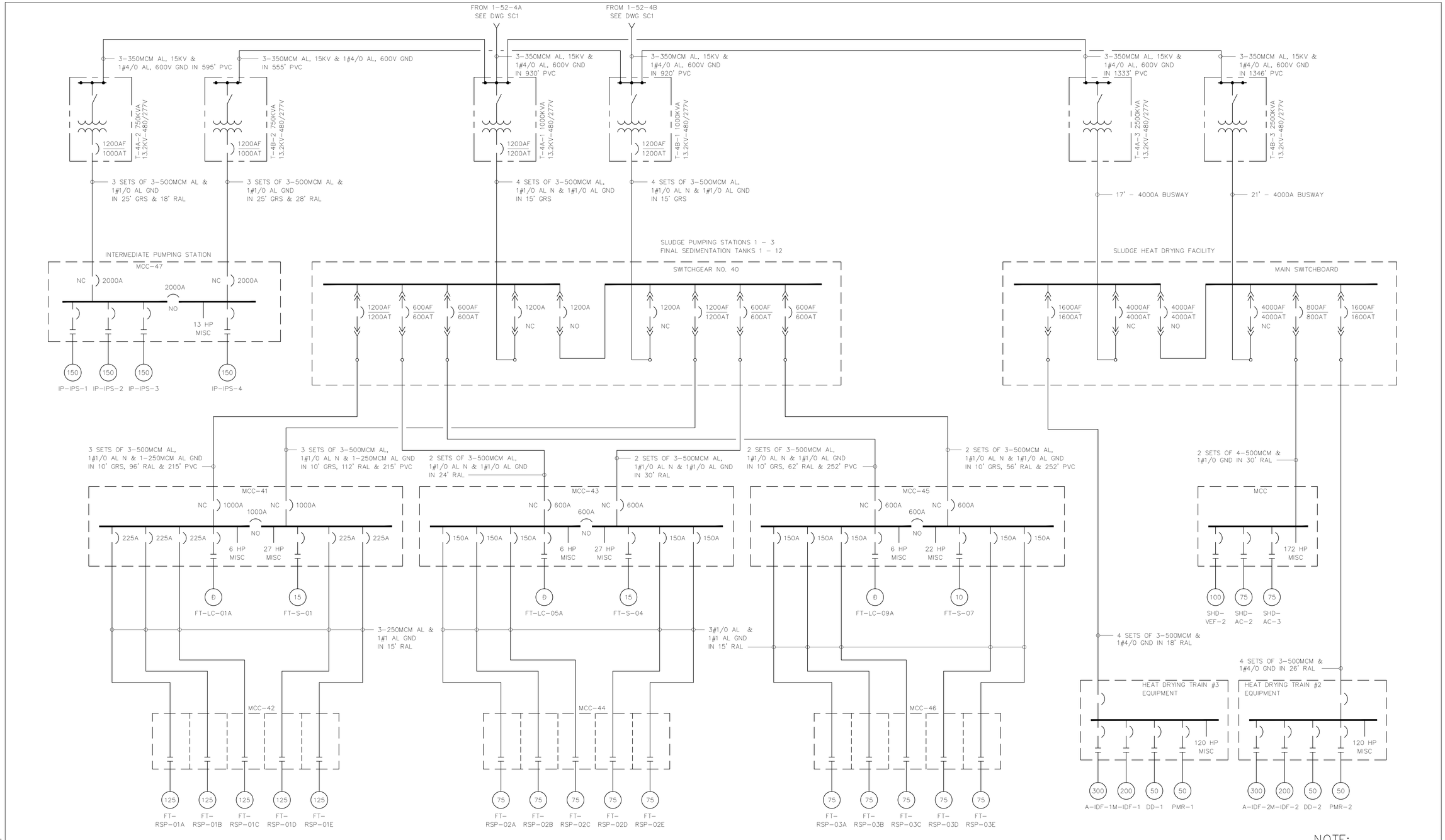

NOTE:

1. SEE DWG SC1 FOR NOTES AND ABBREVIATIONS

FILE: SWGDS SCALE: 11:11(7), 1993 at 09:56 PM1 -24"

GREELEY AND HANSEN ENGINEERS 4350 WEST CYPRESS STREET TAMPA, FLORIDA 33607-4135	DESIGNED BBK DRAWN BBK CHECKED BBK	APPROVED _____ DATE _____ _____ DATE _____ GREELEY AND HANSEN, ENGINEERS	NO. / DATE / APPD / REVISION	SCALE NO SCALE	CITY OF TAMPA, FLORIDA HOOKERS POINT WASTEWATER TREATMENT PLANT PLANT EXPANSION PHASE I DIVISION 5H3B STANDBY POWER AND SLUDGE STORAGE FACILITIES	ELECTRICAL GENERAL OVERALL ONE LINE DIAGRAM - PARTR D	PROJ NO. 202G DWG SD-24 SHEET DATE JANUARY 1993 REV 0

5H3B_0SD-024

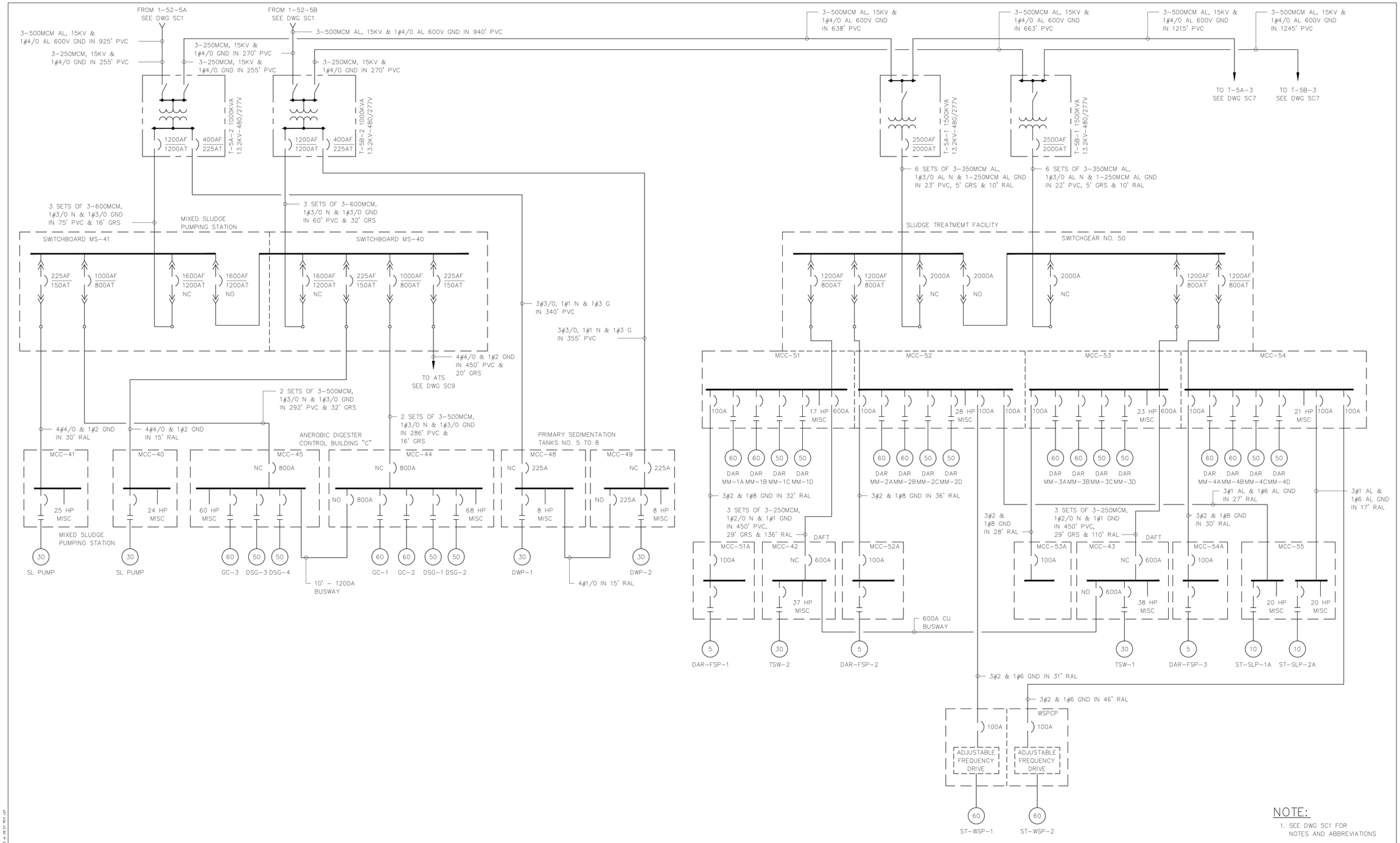

NOTE:

1. SEE DWG SC1 FOR NOTES AND ABBREVIATIONS

GREELEY AND HANSEN ENGINEERS 4350 WEST CYPRESS STREET TAMPA, FLORIDA 33607-4135	DESIGNED BBK DRAWN BBK CHECKED BBK	APPROVED DATE DATE GREELEY AND HANSEN, ENGINEERS	NO.	DATE	APPD	REVISION	SCALE NO SCALE

CITY OF TAMPA, FLORIDA
HOOKERS POINT WASTEWATER TREATMENT PLANT
PLANT EXPANSION
PHASE I DIVISION 5H3B
STANDBY POWER AND SLUDGE STORAGE FACILITIES

ELECTRICAL
GENERAL
OVERALL ONE LINE DIAGRAM - PART E1

PROJ NO. 202G
DWG SD-25
SHEET
DATE JANUARY 1993 REV 0

5H3B_0SD-025

FILE: TAMDGN1 SCALE: 1:1 TUTL: 1993 at 09:57 MST -24

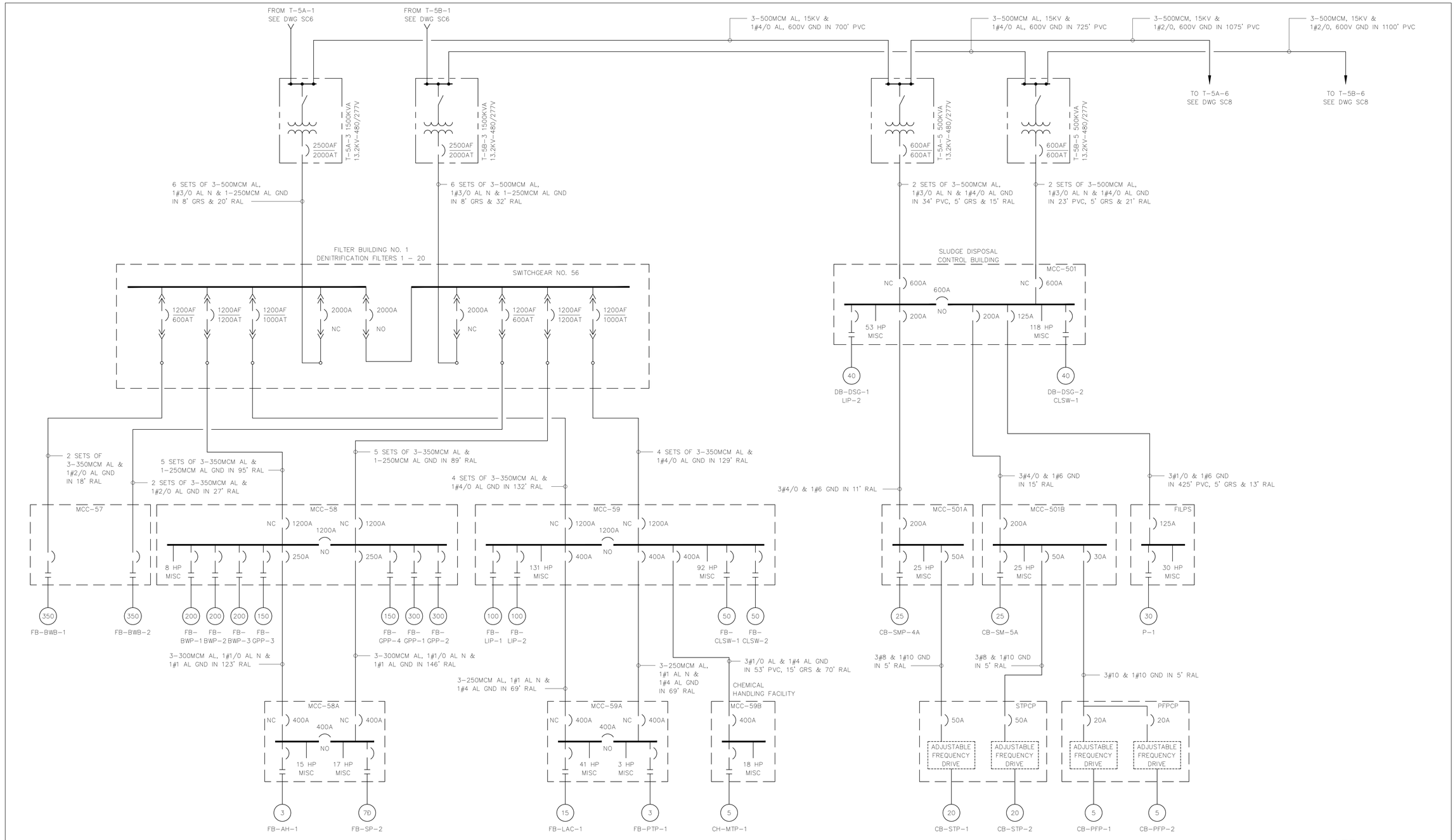

NOTE:

1. SEE DWG SC1 FOR NOTES AND ABBREVIATIONS

FILE: T:\MICROSTATION\5H3B\SD\5H3B_0SD-026.DGN SCALE: 1=1 (1/1), 1993 at 09:54 PM

GREELEY AND HANSEN ENGINEERS 4350 WEST CYPRESS STREET TAMPA, FLORIDA 33607-4135	DESIGNED BBK DRAWN BBK CHECKED BBK	APPROVED DATE DATE GREELEY AND HANSEN, ENGINEERS	NO.	DATE	APPD	REVISION	SCALE NO SCALE

CITY OF TAMPA, FLORIDA
HOOKERS POINT WASTEWATER TREATMENT PLANT
PLANT EXPANSION
PHASE I DIVISION 5H3B
STANDBY POWER AND SLUDGE STORAGE FACILITIES

ELECTRICAL
GENERAL
OVERALL ONE LINE DIAGRAM - PART E2

PROJ NO. 202G
DWG SD-26
SHEET
DATE JANUARY 1993 REV 0

5H3B_0SD-026

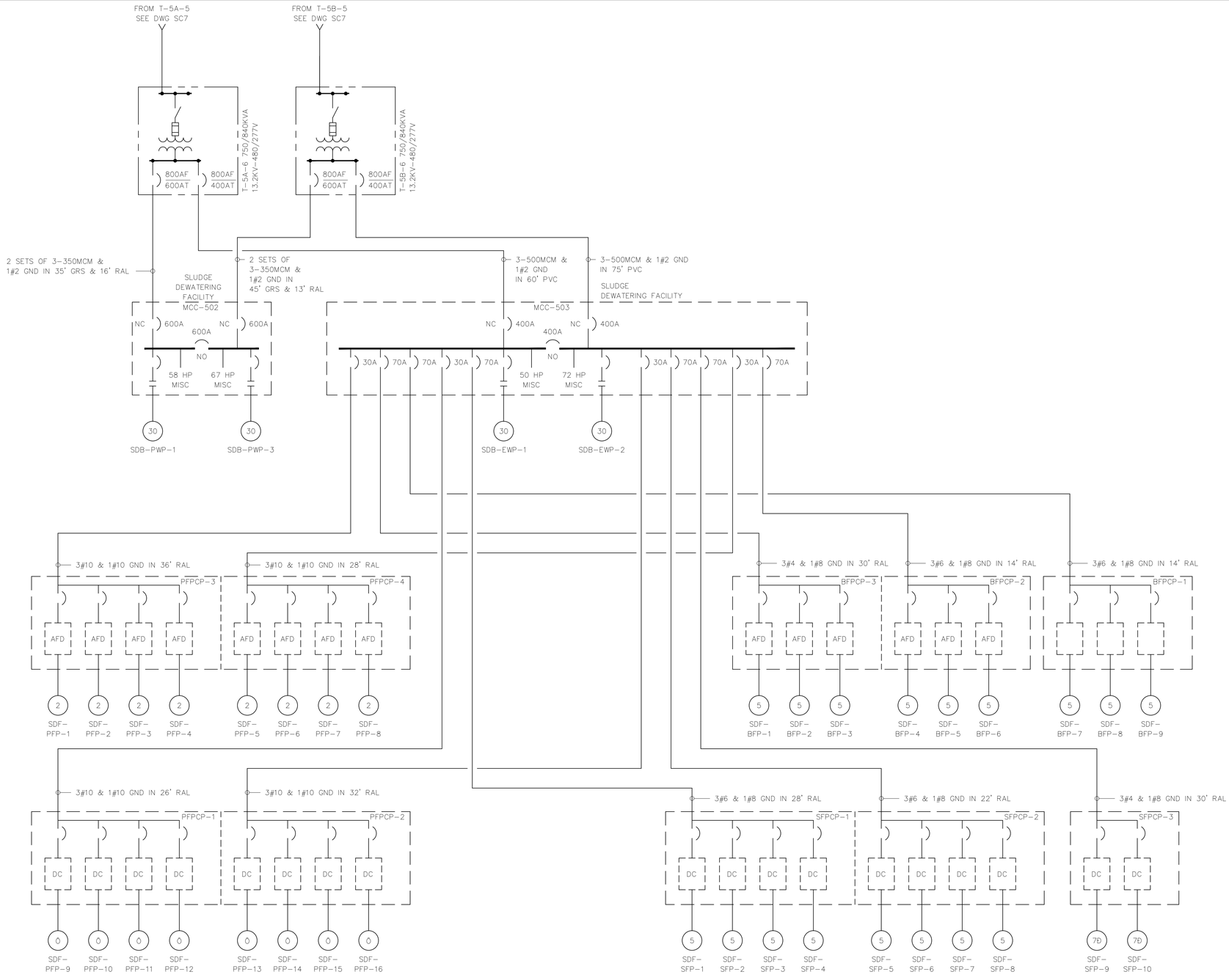

NOTE:

1. SEE DWG SC1 FOR NOTES AND ABBREVIATIONS

GREELEY AND HANSEN ENGINEERS 4350 WEST CYPRESS STREET TAMPA, FLORIDA 33607-4135	DESIGNED BBK DRAWN BBK CHECKED BBK	APPROVED _____ DATE _____ _____ DATE _____ GREELEY AND HANSEN, ENGINEERS	NO.	DATE	APPD	REVISION	SCALE NO SCALE

CITY OF TAMPA, FLORIDA
HOOKERS POINT WASTEWATER TREATMENT PLANT
PLANT EXPANSION
PHASE I DIVISION 5H3B
STANDBY POWER AND SLUDGE STORAGE FACILITIES

ELECTRICAL
GENERAL
OVERALL ONE LINE DIAGRAM – PART E3

PROJ NO. 202G
DWG SD-27
SHEET
DATE JANUARY 1993 REV 0

5H3B_0SD-027

FILE: TAMDGN3 SCALE: 1:1 11/71, 1993 at 10:02 MST1 JZ*

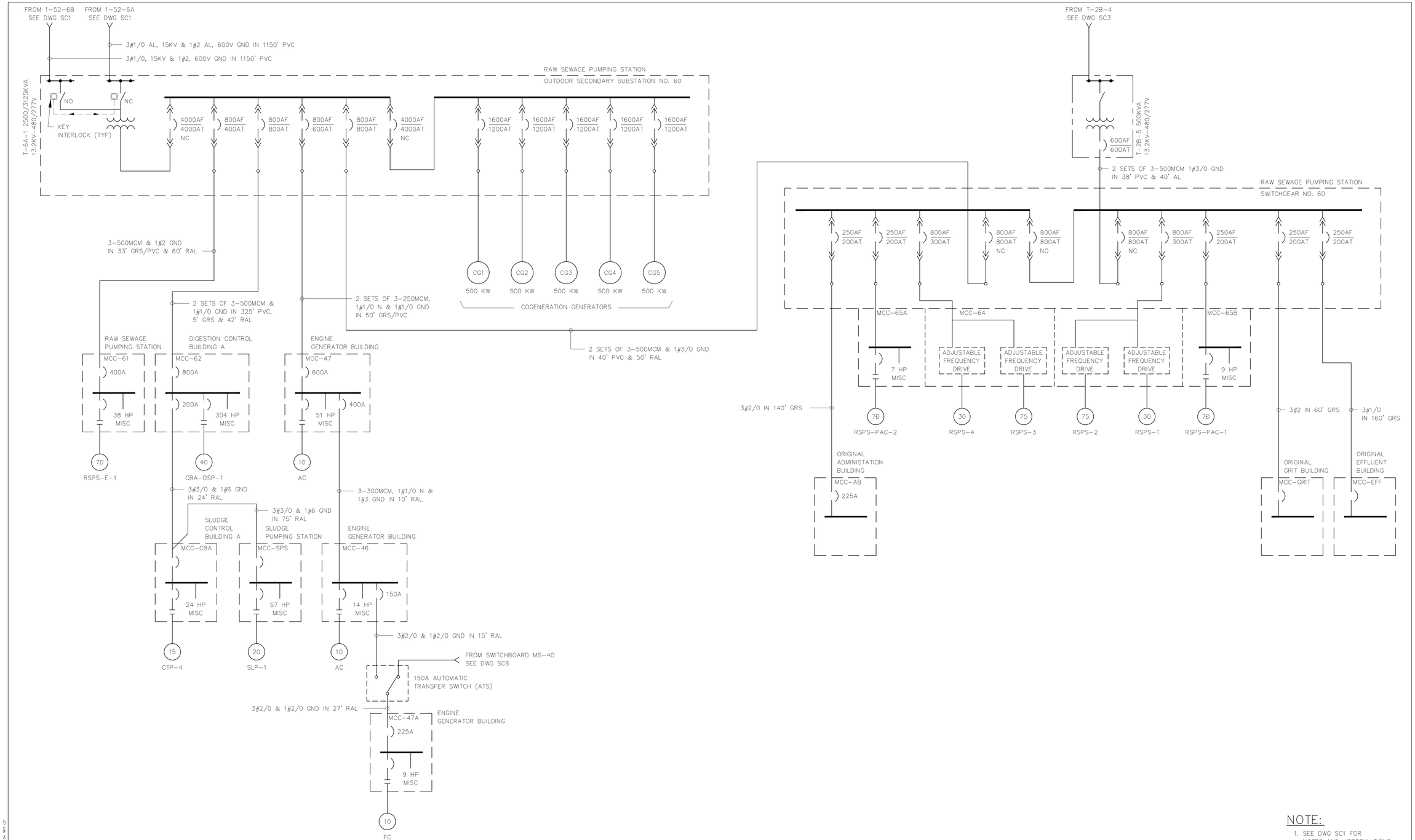

NOTE:

1. SEE DWG SC1 FOR NOTES AND ABBREVIATIONS

GREELEY AND HANSEN ENGINEERS 4350 WEST CYPRESS STREET TAMPA, FLORIDA 33607-4135	DESIGNED BBK DRAWN BBK CHECKED BBK	APPROVED DATE DATE GREELEY AND HANSEN, ENGINEERS	NO. DATE APPD REVISION	SCALE NO SCALE	CITY OF TAMPA, FLORIDA HOOKERS POINT WASTEWATER TREATMENT PLANT PLANT EXPANSION PHASE I DIVISION 5H3B STANDBY POWER AND SLUDGE STORAGE FACILITIES	ELECTRICAL GENERAL OVERALL ONE LINE DIAGRAM – PART F	PROJ NO. 202G DWG SD-28 SHEET DATE JANUARY 1993 REV 0

5H3B_0SD-028

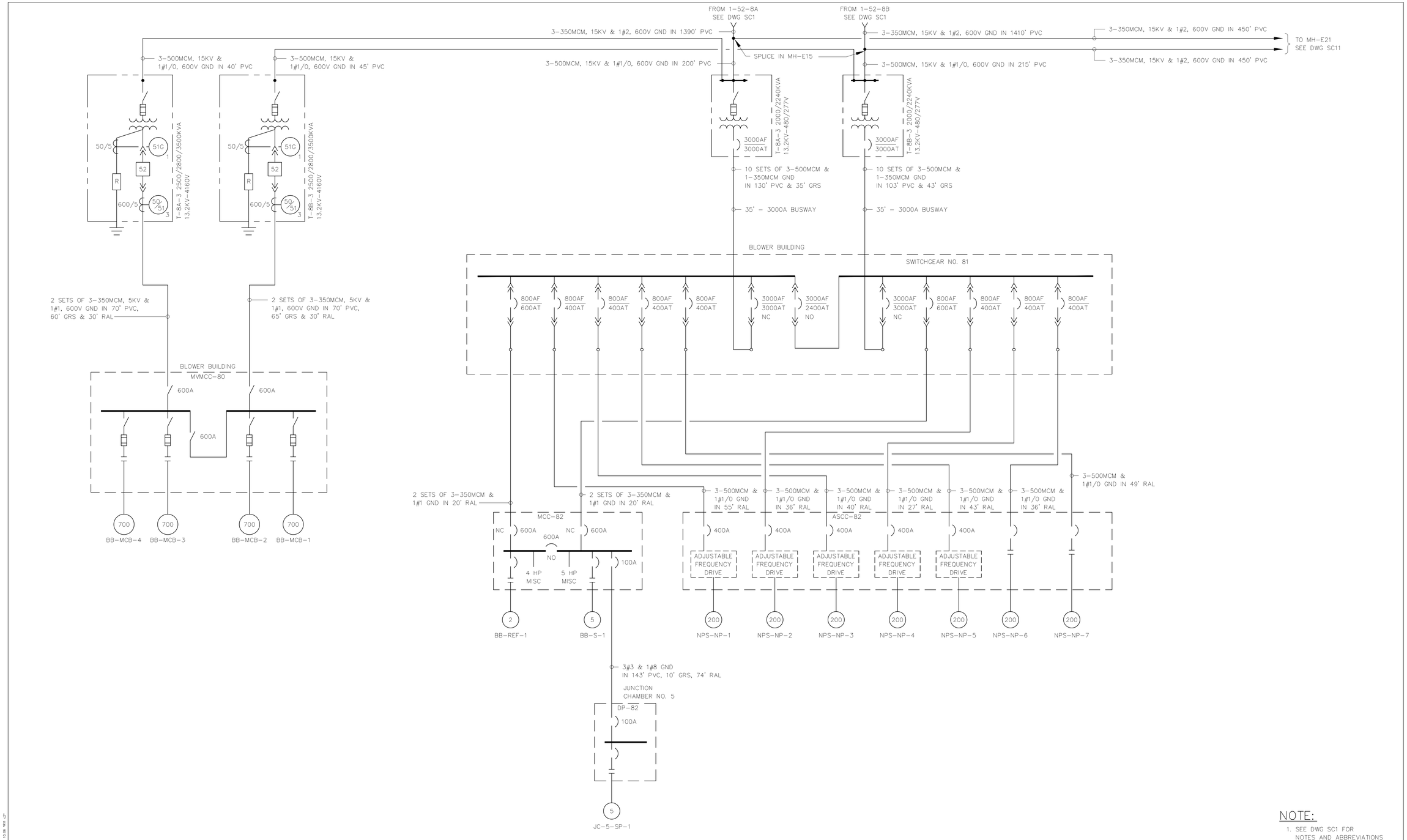

NOTE:

1. SEE DWG SC1 FOR NOTES AND ABBREVIATIONS

GREELEY AND HANSEN ENGINEERS 4350 WEST CYPRESS STREET TAMPA, FLORIDA 33607-4135	DESIGNED BBK DRAWN BBK CHECKED BBK	APPROVED DATE DATE GREELEY AND HANSEN, ENGINEERS	NO.	DATE	APPD	REVISION	SCALE NO SCALE	CITY OF TAMPA, FLORIDA HOOKERS POINT WASTEWATER TREATMENT PLANT PLANT EXPANSION PHASE I DIVISION 5H3B STANDBY POWER AND SLUDGE STORAGE FACILITIES	ELECTRICAL GENERAL OVERALL ONE LINE DIAGRAM - PART H1	PROJ NO. 202G DWG SD-29 SHEET DATE JANUARY 1993 REV 0

5H3B_0SD-029

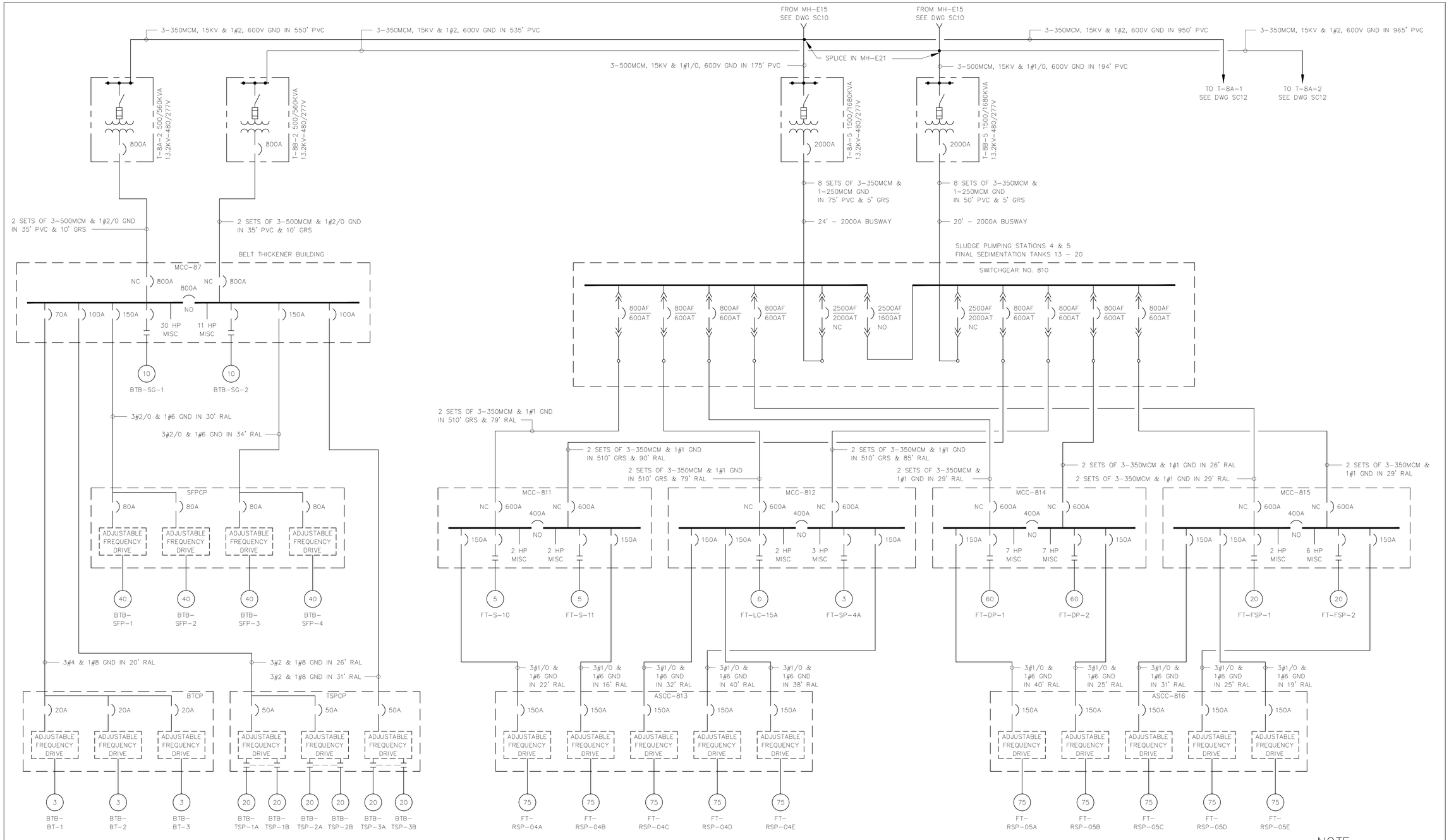

NOTE:

1. SEE DWG SC1 FOR NOTES AND ABBREVIATIONS

GREELEY AND HANSEN ENGINEERS 4350 WEST CYPRESS STREET TAMPA, FLORIDA 33607-4135	DESIGNED BBK DRAWN BBK CHECKED BBK	APPROVED _____ DATE _____ _____ DATE _____ GREELEY AND HANSEN, ENGINEERS	NO.	DATE	APPD	REVISION	SCALE NO SCALE

CITY OF TAMPA, FLORIDA
HOOKERS POINT WASTEWATER TREATMENT PLANT
PLANT EXPANSION
PHASE I DIVISION 5H3B
STANDBY POWER AND SLUDGE STORAGE FACILITIES

ELECTRICAL
GENERAL
OVERALL ONE LINE DIAGRAM - PART H2

PROJ NO. 202G
DWG SD-30
SHEET
DATE JANUARY 1993 REV 0

5H3B_0SD-030

FILE: TAMPA2NE SCALE: 1:1 11/71, 1993 at 10:09 PM by JP

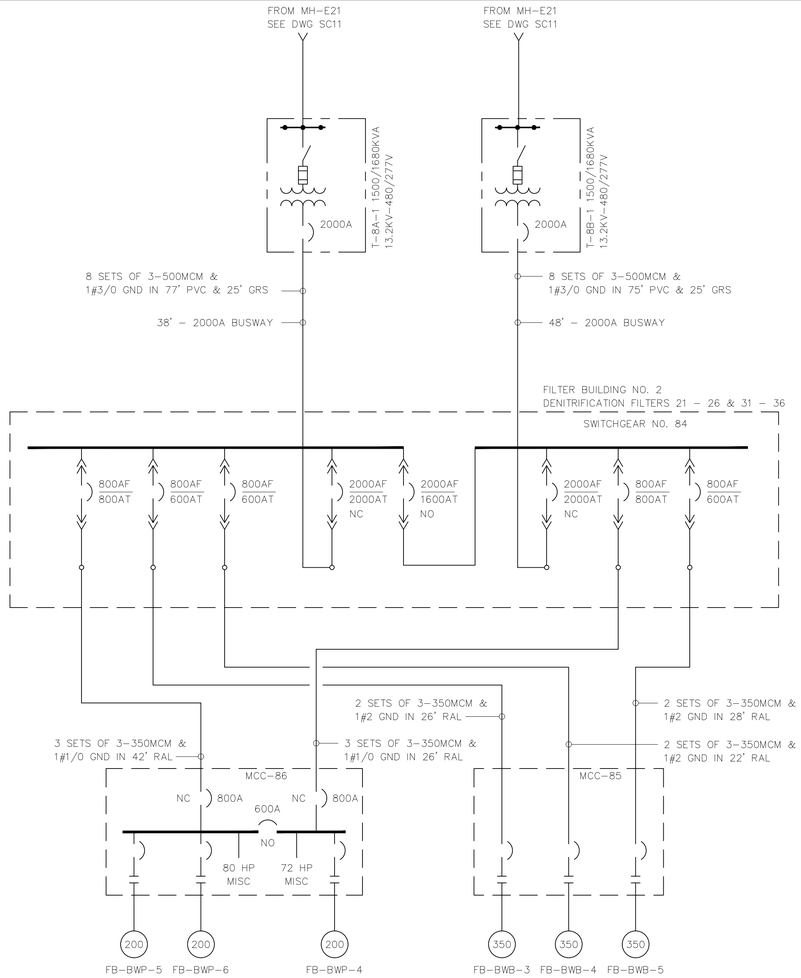

NOTE:

1. SEE DWG SC1 FOR NOTES AND ABBREVIATIONS

GREELEY AND HANSEN ENGINEERS 4350 WEST CYPRESS STREET TAMPA, FLORIDA 33607-4135	DESIGNED BBK DRAWN BBK CHECKED BBK	APPROVED DATE DATE GREELEY AND HANSEN, ENGINEERS	NO. DATE APPD REVISION	SCALE NO SCALE	CITY OF TAMPA, FLORIDA HOOKERS POINT WASTEWATER TREATMENT PLANT PLANT EXPANSION PHASE I DIVISION 5H3B STANDBY POWER AND SLUDGE STORAGE FACILITIES	ELECTRICAL GENERAL OVERALL ONE LINE DIAGRAM - PART H3	PROJ NO. 202G DWG SD-31 SHEET DATE JANUARY 1993 REV 0

5H3B_0SD-031

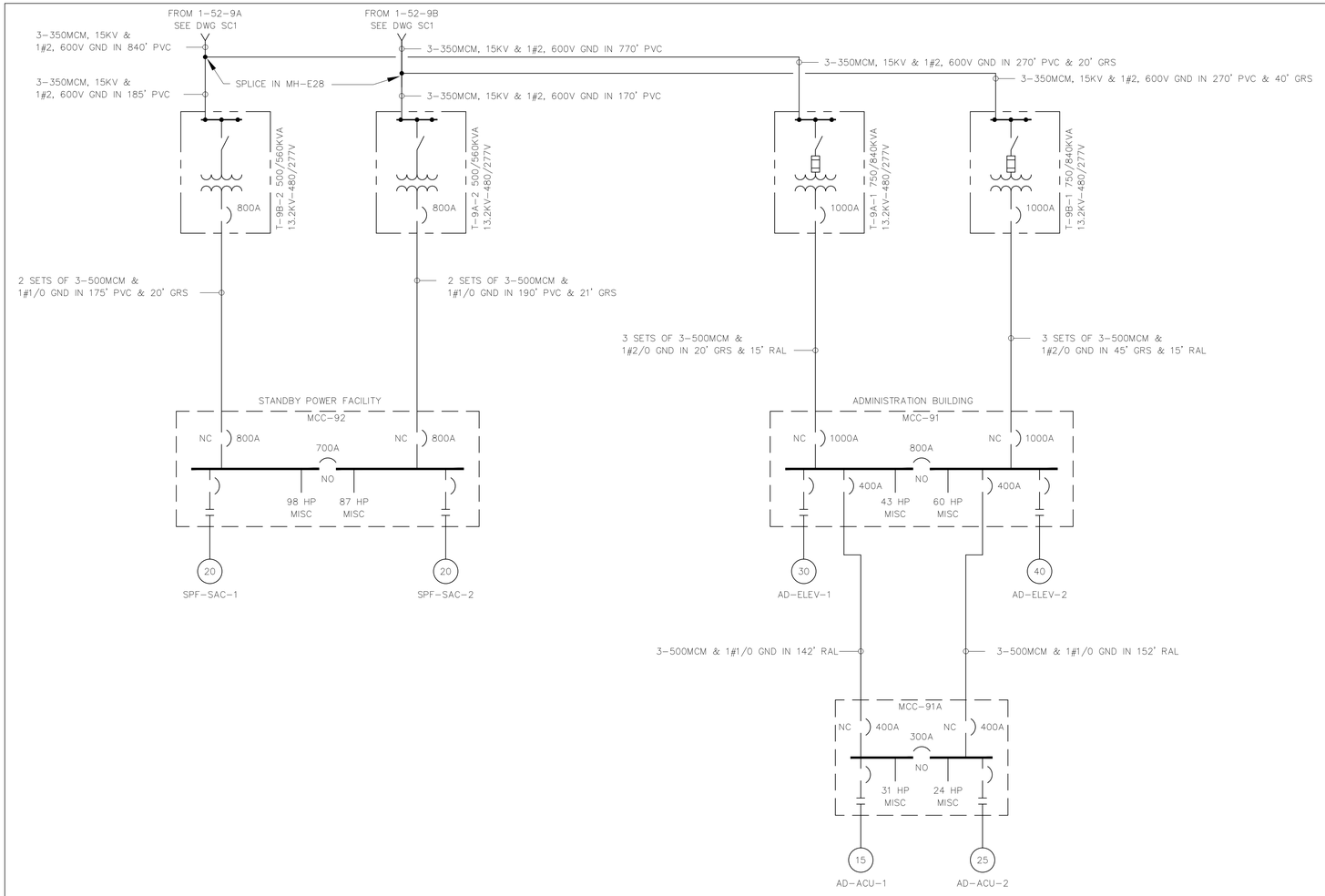

NOTE:

1. SEE DWG SC1 FOR NOTES AND ABBREVIATIONS

GREELEY AND HANSEN ENGINEERS 4350 WEST CYPRESS STREET TAMPA, FLORIDA 33607-4135	DESIGNED BBK DRAWN BBK CHECKED BBK	APPROVED DATE DATE GREELEY AND HANSEN, ENGINEERS	NO.	DATE	APPD	REVISION	SCALE NO SCALE	CITY OF TAMPA, FLORIDA HOOKERS POINT WASTEWATER TREATMENT PLANT PLANT EXPANSION PHASE I DIVISION 5H3B STANDBY POWER AND SLUDGE STORAGE FACILITIES	ELECTRICAL GENERAL OVERALL ONE LINE DIAGRAM – PART I	PROJ NO. 202G DWG SD-32 SHEET DATE JANUARY 1993 REV 0

5H3B_0SD-032

REVISED BEAM SCHEDULE

FOR REMAINDER OF BEAM SCHEDULE, SEE DRAWINGS TS7 & TS8

AREA	MARK	SIZE W X D	BOTT BARS	TOP BARS A	TOP BARS B	TOP BARS C	W OR S SUPPORT / E OR N SUPPORT	STIRRUPS SIZE	STIRRUPS SPA EA END	STIRRUPS TYPE	REMARKS
	GB1	30x52	6-#7	6-#7 A1		6-#7 C1		#4	@12 THROUGHOUT	S2	BEAM DEPTH TAKEN FROM EL 11'-5"
	GB11	30x52	6-#7	4-#7 A1		4-#7 C1		#4	@12	S2	BEAM DEPTH TAKEN FROM EL 11'-5"
	GB15	36x55	7-#7	5-#7 A1		5-#7 C1	COL B.7,1	#4	@6	S2	BEAM DEPTH TAKEN FROM LP EL 11'-5". SEE SEC 13/TS5
	GB16	24x62	6-#8*	6-#8 A1		6-#8 C1		#4	@6	S4	SEE DWG TS8 FOR GRADE BM SECTION
	GB17	24x62	6-#8*			6-#8 C1		#4	@6	S4	SEE DWG TS8 FOR GRADE BM SECTION
	GB18	24x62	6-#9*			6-#8 C1		#4	@6	S4	SEE DWG TS8 FOR GRADE BM SECTION
	GB19	24x62	6-#8*	6-#8 A1				#4	@6	S4	SEE DWG TS8 FOR GRADE BM SECTION
	GB20	36x55	7-#7	5-#7 A1				#4	@6	S2	BEAM DEPTH TAKEN FROM LP EL 11'-5". SEE SECT 13/TS5
	GB1A	24x52	6-#7	12 # A1			2'-6" / 2'-6"	#4	@6	S4	BEAM DEPTH TAKEN FROM EL 11'-5" 1/2 A1 EACH END
	2B8A	30x24	4-#8	6-#9 A1				#4	@8	S6	1/2 A1 EACH END

* LAP SPLICE 3 NOS BOTTOM BARS AT SUPPORTS

TYPE S4

NOTE:
PLAN, SECTIONS, BEAM SCHEDULE, COLUMN SCHEDULE AND OTHER DETAILS SHOWN HERE, SUPERSEDE THE RELEVANT DETAILS ON DRAWINGS TS1 THRU TS11.

COL. SCHEDULE

FOR REMAINDER OF COLUMN SCHEDULE, SEE DRAWING TS9

COLUMN MARK	A1.9 A1 B.7-1.9 B.7-1 E1.9 E1
HIGH ROOF EL 39'-6"	
LOW ROOF EL 26'-6"	
GROUND FLOOR HP EL 12'-0"	3-#9 / 20x30 8-#9T4
T/PILE CAP EL VARIES	

T4

REVISED PILE SCHEDULE

ITEM	MARK	NO. OF PILES	UPLIFT PILES	CUT-OFF ELEV.	REMARKS
		4	0	10'-8"	
		6	0	7'-2"	
		31	0	7'-3" (1)	
		17	0	8'-10	GENERATOR BASES (INCL. FUTURE BASE)
		8	0	7'-6	GENERATOR BASES
		6	0	-0'-10"	
		21	0	10'-4"	
		3	0	7'-8"	
		24	0	(-) 3'-4"	
		24	0	5'-0"	
		93	0	4'-6"	
		10	0	4'-0"	
		23	0	6'-11"	

TOTAL NUMBER OF PILES THIS SCHEDULE = 270

FILE: H:\VCSHJB\SDV\B5D003 SCALE: 1:1 PLOT: 1993 at 14:28 PRT: LP

KLEIN AND HOFFMAN, INC.
CONSULTING ENGINEERS
4350 W. CYPRESS STREET
TAMPA, FLORIDA 33607 - 4135
PROJECT NO. 4187

GREELEY AND HANSEN
ENGINEERS
4350 WEST CYPRESS STREET
TAMPA, FLORIDA 33607-4135

DESIGNED JVT
DRAWN SKC
CHECKED SKC

APPROVED _____ DATE _____
_____ DATE _____
GREELEY AND HANSEN, ENGINEERS

NO.	DATE	APPD	REVISION
1	6/4/93	SKC	PILE SCHED. CUT-OFF ELEV.

SCALE
8 0 8 16 FT 1/8"=1'-0"
1 0 1 2 3 4 5 6 7 FT 3/8"=1'-0"

CITY OF TAMPA, FLORIDA
HOOKERS POINT WASTEWATER TREATMENT PLANT
PLANT EXPANSION
PHASE I DIVISION 5H3B
STANDBY POWER AND SLUDGE STORAGE FACILITIES

STANDBY POWER FACILITY
STRUCTURAL
REVISED PLANS, SECTIONS AND SCHEDULES

REVISES DRAWING NO. TS1-TS11

PROJ NO. 202G
DWG SD-3
SHEET
DATE MAY 1993 REV 1

5H3B_0TS-001B

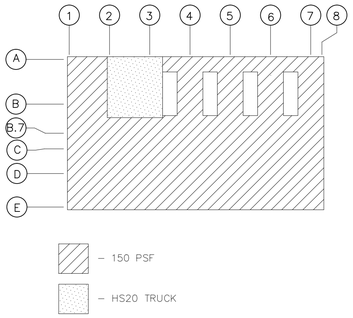

LOADING DIAGRAM

NOTE: WHEN CONSTRUCTING UNDERGROUND FUEL STORAGE TANKS, THE CONTRACTOR MUST ABSOLUTELY CONTROL GROUND WATER LEVEL AT ALL TIMES UNTIL ALL BACKFILL IS COMPLETELY IN PLACE. THE BASE SLAB ALONE WILL NOT PROVIDE SUFFICIENT WEIGHT TO PREVENT TANKS FROM FLOATING.

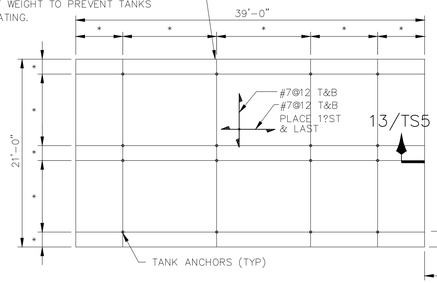

* LOCATIONS, DIMENSIONS & DETAILS OF TANK ANCHORS TO BE DETERMINED AFTER SELECTION OF TANK.

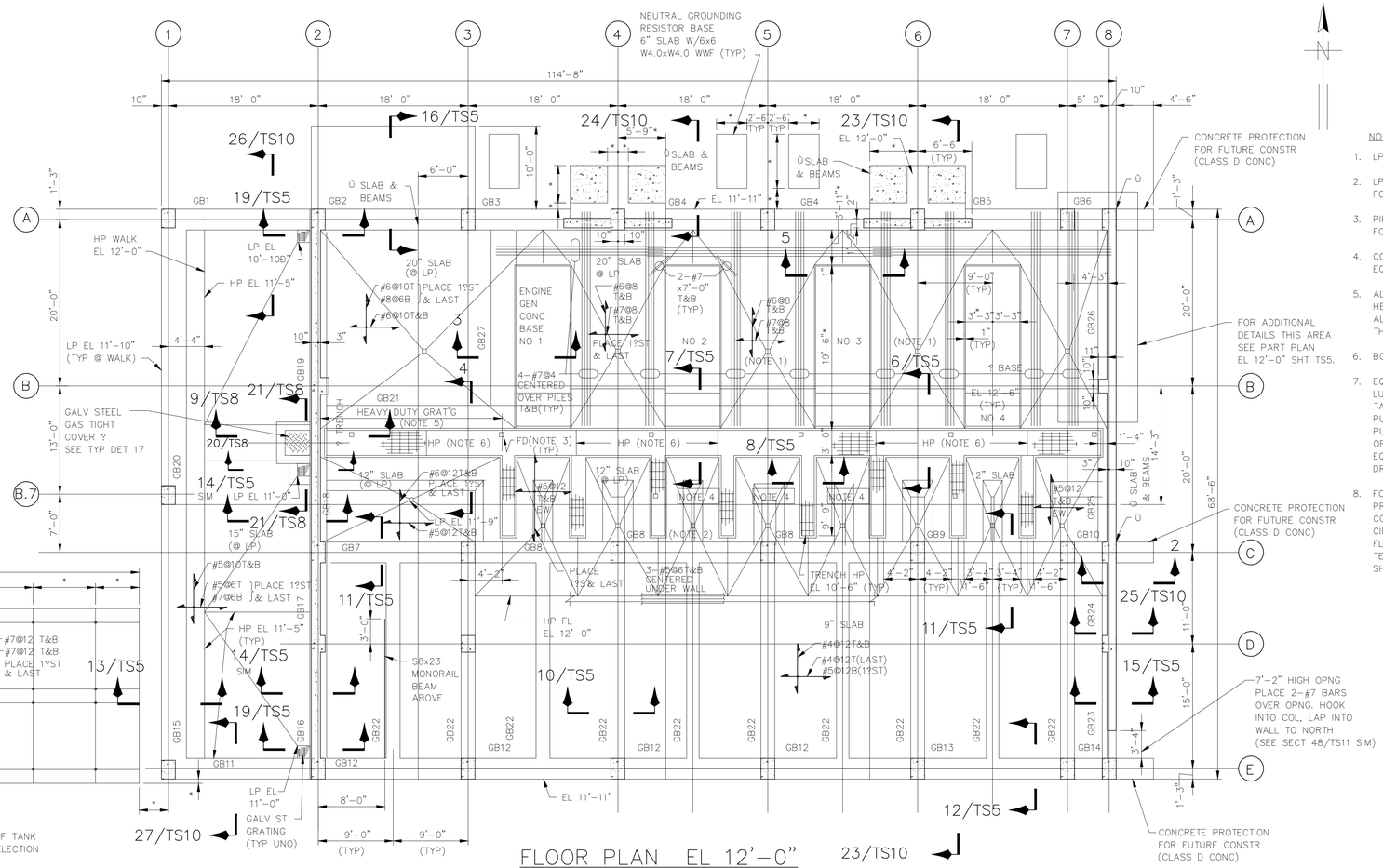

FLOOR PLAN EL 12'–0"

SCALE: 1"=1'–0"

NOTES:

1. LP FLOOR ELEVATION AT FLOOR DRAIN EL 11'–8" (TYP).
2. LP FLOOR ELEVATION AT FLOOR DRAIN EL 11'–9Ð" (TYP). FOR FLOOR DRAIN LOCATIONS SEE DWG TM8.
3. PIPE TRENCH BOTTOM ELEVATION AT DRAIN EL 8'–3" (TYP). FOR DRAIN LOCATIONS SEE DWG TM8.
4. CONCRETE PUMP BASE SIZE TO BE DETERMINED AFTER EQUIPMENT SELECTION.
5. ALL OPEN GRATING SHALL BE GALVANIZED STEEL. HEAVY DUTY GRATING SHALL BEAR H20 TRUCK TRAFFIC. ALL OTHER GRATING SHALL BE DESIGNED FOR NOT LESS THAN 150 LBS PER SQ FT LIVE LOAD
6. BOTTOM PIPE TRENCH HP EL 8'–6" (TYP).
7. EQUIPMENT PADS SHALL BE PROVIDED FOR THE WASTE LUBE OIL STORAGE TANK, FRESH LUBE OIL STORAGE TANKS, WASTE LUBE OIL PUMP, FRESH LUBE OIL PUMP, DAY TANK, FUEL OIL COOLER, AND FUEL OIL PUMPS SHOWN ON DRAWING TM1. THE TOP ELEVATION OF THE PADS SHALL BE ELEVATION 12'–0". THE EQUIPMENT PAD DETAIL SHALL BE AS SHOWN ON DRAWING AS1.
8. FOUR–INCH MINIMUM HEIGHT EQUIPMENT PADS SHALL BE PROVIDED FOR THE GENERATOR INSTRUMENT PANEL, AIR COMPRESSORS, AIR RECEIVER TANKS, AND JACKET WATER CIRCULATING PUMPS SHOWN ON DRAWING TM1 AND ALL FLOOR–MOUNTED ELECTRICAL GEAR SHOWN ON DRAWINGS TE13, TE14, AND TE15. THE EQUIPMENT PAD DETAIL SHALL BE AS SHOWN ON DRAWING AS1.

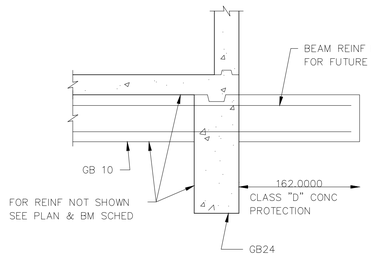

SECTION 2

SCALE 1"=1'–0"

NOTE: SEE ARCH DWGS FOR DOVETAIL SLOT REQUIREMENTS SEE ARCH DWGS FOR MASONRY SIZES, LOCATIONS & REINFORCING

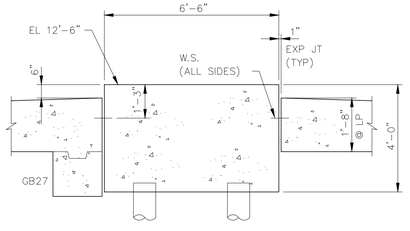

SECTION 3

SCALE 1"=1'–0"

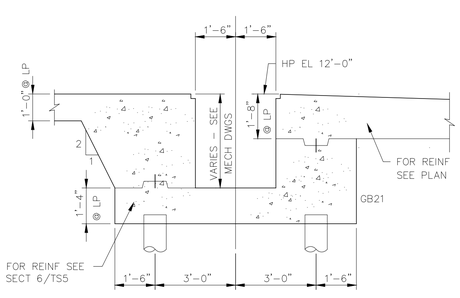

SECTION 4

SCALE 1"=1'–0"

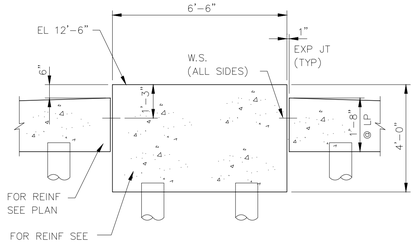

SECTION 5

SCALE 1"=1'–0"

See Supplemental Drawing SD-2 and SD-3

RECORD DRAWING

THIS RECORD DRAWING IS NOT WARRANTED BUT IS BELIEVED TO REPRESENT CONDITIONS UPON COMPLETION OF CONSTRUCTION WITHIN REASONABLE TOLERANCES, BASED UPON THE INFORMATION FURNISHED TO THE ENGINEER PERTAINING TO CHANGES MADE DURING CONSTRUCTION.

KLEIN AND HOFFMAN, INC.
CONSULTING ENGINEERS
4350 W. CYPRESS STREET
TAMPA, FLORIDA 33607 – 4135
PROJECT NO. 4187

GREELEY AND HANSEN
ENGINEERS
1715 NORTH WESTSHORE BOULEVARD
TAMPA, FLORIDA 33607–4135

DESIGNED	WRC, JAH
DRAWN	KCS
CHECKED	WRC

APPROVED _____ DATE _____

_____ DATE _____
GREELEY AND HANSEN, ENGINEERS

NO.	DATE	APPD	REVISION
3	8/1/96		RECORD DWG REVISIONS.

SCALE
8 0 8 16 FT
1 0 1 2 3 4 5 6 7 FT
1/8"=1'–0"
3/8"=1'–0"

CITY OF TAMPA, FLORIDA
HOOKERS POINT WASTEWATER TREATMENT PLANT
PLANT EXPANSION
PHASE I DIVISION 5H3B
STANDBY POWER AND SLUDGE STORAGE FACILITIES

STANDBY POWER FACILITY
STRUCTURAL
PLAN EL 12'–0" AND SECTIONS

PROJ NO. 202G
DWG TS2
SHEET
DATE DECEMBER 1991 REV 3

5H3B_0TS-002

FILE: H3B-TS02 SCALE: 1:96 09/06, 1996 at 13:33 – *13_c4h (Hardware Lock)*

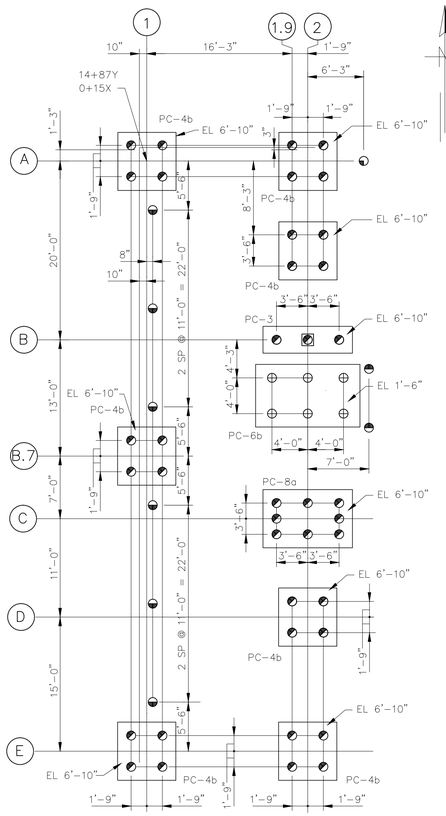

FOR REMAINDER OF PLAN, SEE DRAWING TS1

REVISED PILE PLAN

SCALE: 1"=1'-0"

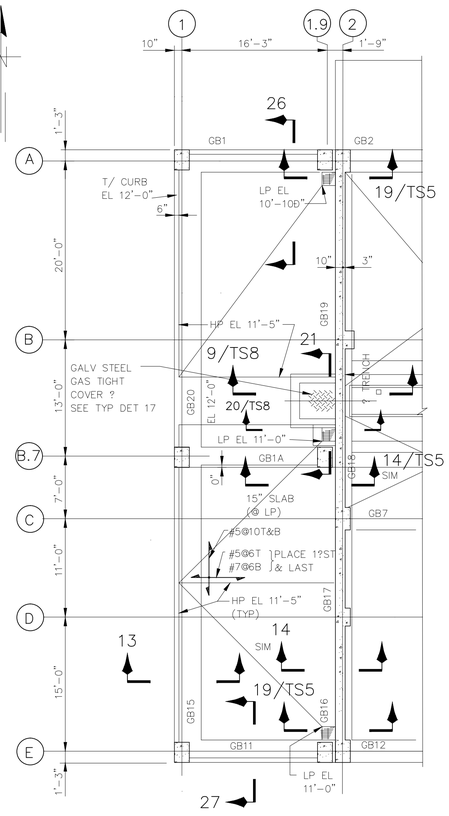

FOR REMAINDER OF PLAN, SEE DRAWING TS2

REVISED PLAN AT EL 12'-0"

SCALE: 1"=1'-0"

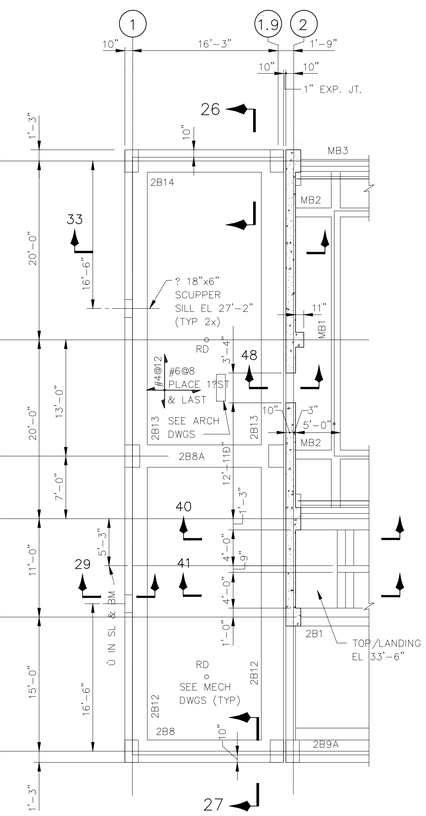

FOR REMAINDER OF PLAN, SEE DRAWING TS3

REVISED PLAN AT EL 35'-0"

SCALE: 1"=1'-0"

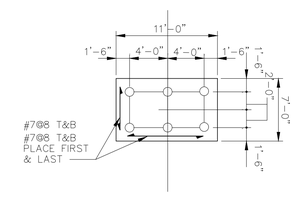

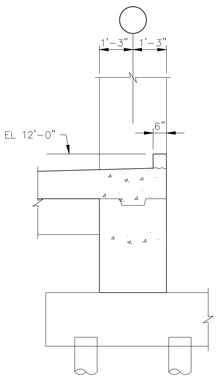

FOR REMAINDER OF SECTION, SEE DRAWING TS10

REVISED SECTION 26 (SHOWN)
REVISED SECTION 27 (OPP HAND)

SCALE: 1"=1'-0"

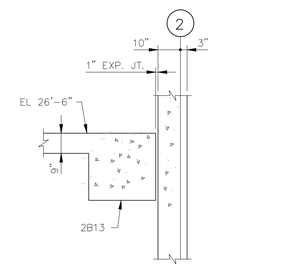

FOR REMAINDER OF SECTION, SEE DRAWING TS4

REVISED SECTION 33

SCALE: 1"=1'-0"

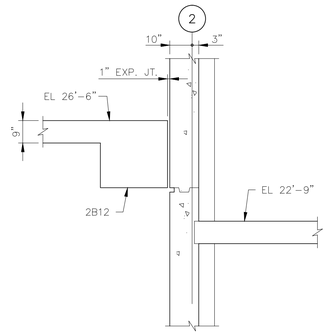

FOR REMAINDER OF SECTION, SEE DRAWING TS9

REVISED SECTION 40
REVISED SECTION 41

SCALE: 1"=1'-0"

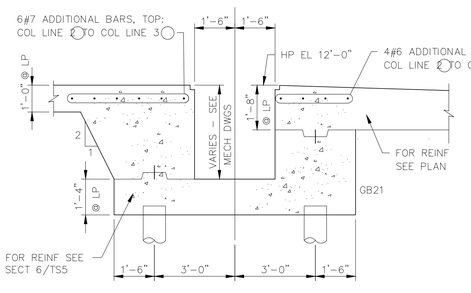

REPLACES SECTION ON DRAWING TS2

REVISED SECTION 4

SCALE: 1"=1'-0"

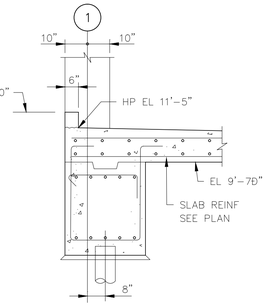

REPLACES SECTION ON DRAWING TS5

REVISED SECTION 13

SCALE: 1"=1'-0"

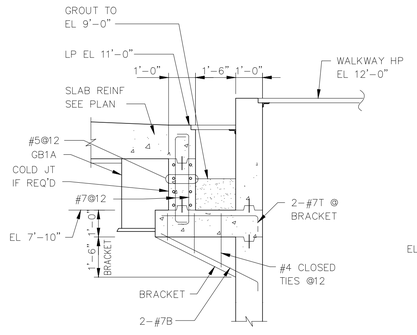

FOR REMAINDER OF SECTION, SEE DRAWING TS8

REVISED SECTION 21

SCALE: 1"=1'-0"

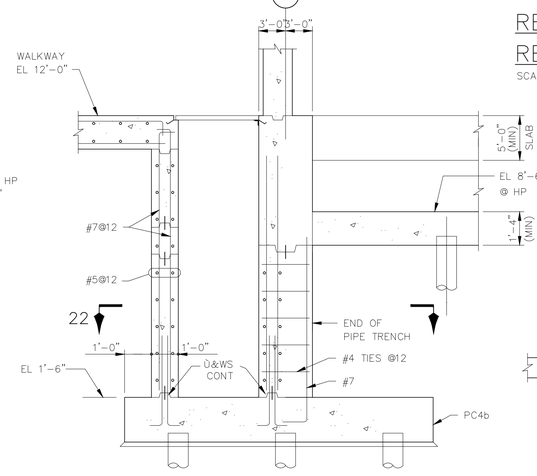

REPLACES SECTION ON DRAWING TS8

REVISED SECTION 9

SCALE: 1"=1'-0"

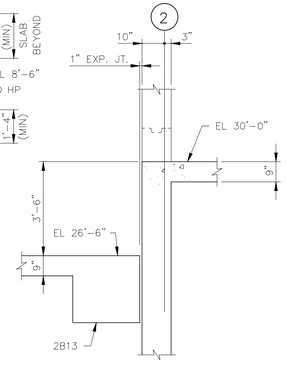

FOR REMAINDER OF SECTION, SEE DRAWING TS11

REVISED SECTION 48

SCALE: 1"=1'-0"

REVISES DRAWING NO. TS1-TS11

KLEIN AND HOFFMAN, INC.
CONSULTING ENGINEERS
4350 W. CYPRESS STREET
TAMPA, FLORIDA 33607 - 4135
PROJECT NO. 4187

GREELEY AND HANSEN
ENGINEERS
4350 WEST CYPRESS STREET
TAMPA, FLORIDA 33607-4135

DESIGNED JVT
DRAWN SKC
CHECKED SKC

APPROVED _____ DATE _____
_____ DATE _____
GREELEY AND HANSEN, ENGINEERS

NO.	DATE	APPD	REVISION

SCALE
8 0 8 16 FT 1/8"=1'-0"
1 0 1 2 3 4 5 6 7 FT 3/8"=1'-0"

CITY OF TAMPA, FLORIDA
HOOKERS POINT WASTEWATER TREATMENT PLANT
PLANT EXPANSION
PHASE I DIVISION 5H3B
STANDBY POWER AND SLUDGE STORAGE FACILITIES

STANDBY POWER FACILITY
STRUCTURAL
REVISED PLANS, SECTIONS AND SCHEDULES

PROJ NO. 202G
DWG SD-2
SHEET
DATE MAY 1993 REV 0

5H3B_0TS-002A

FILE: H3B0002 SCALE: 1:96 05/10, 1993 at 09:18 #01.2*

REVISED BEAM SCHEDULE

FOR REMAINDER OF BEAM SCHEDULE, SEE DRAWINGS TS7 & TS8

AREA	MARK	SIZE W X D	BOTT BARS	TOP BARS A	TOP BARS B	TOP BARS C	W OR S SUPPORT / E OR N SUPPORT	STIRRUPS SIZE	STIRRUPS SPA EA END	STIRRUPS TYPE	REMARKS
	GB1	30x52	6-#7	6-#7 A1		6-#7 C1		#4	@12 THROUGHOUT	S2	BEAM DEPTH TAKEN FROM EL 11'-5"
	GB11	30x52	6-#7	4-#7 A1		4-#7 C1		#4	@12	S2	BEAM DEPTH TAKEN FROM EL 11'-5"
	GB15	36x55	7-#7	5-#7 A1		5-#7 C1	COL B.7,1	#4	@6	S2	BEAM DEPTH TAKEN FROM LP EL 11'-5". SEE SEC 13/TS5
	GB16	24x62	6-#8*	6-#8 A1		6-#8 C1		#4	@6	S4	SEE DWG TS8 FOR GRADE BM SECTION
	GB17	24x62	6-#8*			6-#8 C1		#4	@6	S4	SEE DWG TS8 FOR GRADE BM SECTION
	GB18	24x62	6-#9*			6-#8 C1		#4	@6	S4	SEE DWG TS8 FOR GRADE BM SECTION
	GB19	24x62	6-#8*	6-#8 A1				#4	@6	S4	SEE DWG TS8 FOR GRADE BM SECTION
	GB20	36x55	7-#7	5-#7 A1				#4	@6	S2	BEAM DEPTH TAKEN FROM LP EL 11'-5". SEE SECT 13/TS5
	GB1A	24x52	6-#7	12 # A1			2'-6" / 2'-6"	#4	@6	S4	BEAM DEPTH TAKEN FROM EL 11'-5" 1/2 A1 EACH END
	2B8A	30x24	4-#8	6-#9 A1				#4	@8	S6	1/2 A1 EACH END

* LAP SPLICE 3 NOS BOTTOM BARS AT SUPPORTS

TYPE S4

NOTE:
PLAN, SECTIONS, BEAM SCHEDULE, COLUMN SCHEDULE AND OTHER DETAILS SHOWN HERE, SUPERSEDE THE RELEVANT DETAILS ON DRAWINGS TS1 THRU TS11.

COL. SCHEDULE

FOR REMAINDER OF COLUMN SCHEDULE, SEE DRAWING TS9

COLUMN MARK	A1.9 A1 B.7-1.9 B.7-1 E1.9 E1
HIGH ROOF EL 39'-6"	
LOW ROOF EL 26'-6"	
GROUND FLOOR HP EL 12'-0"	3-#9 / 20x30 8-#9T4
T/PILE CAP EL VARIES	

T4

REVISED PILE SCHEDULE

ITEM	MARK	NO. OF PILES	UPLIFT PILES	CUT-OFF ELEV.	REMARKS
		4	0	10'-8"	
		6	0	7'-2"	
		31	0	7'-3" (1)	
		17	0	8'-10	GENERATOR BASES (INCL. FUTURE BASE)
		8	0	7'-6	GENERATOR BASES
		6	0	-0'-10"	
		21	0	10'-4"	
		3	0	7'-8"	
		24	0	(-) 3'-4"	
		24	0	5'-0"	
		93	0	4'-6"	
		10	0	4'-0"	
		23	0	6'-11"	

TOTAL NUMBER OF PILES THIS SCHEDULE = 270

FILE: H:\VCSHJW\SDV\B95003.SCALE: 1:1 PLOT: MAY 14, 1993 at 14:28 "PDT -12"

KLEIN AND HOFFMAN, INC.
CONSULTING ENGINEERS
4350 W. CYPRESS STREET
TAMPA, FLORIDA 33607 - 4135
PROJECT NO. 4187

GREELEY AND HANSEN
ENGINEERS
4350 WEST CYPRESS STREET
TAMPA, FLORIDA 33607-4135

DESIGNED JVT
DRAWN SKC
CHECKED SKC

APPROVED _____ DATE _____
_____ DATE _____
GREELEY AND HANSEN, ENGINEERS

NO.	DATE	APPD	REVISION
1	6/4/93	SKC	PILE SCHED. CUT-OFF ELEV.

SCALE
8 0 8 16 FT 1/8"=1'-0"
1 0 1 2 3 4 5 6 7 FT 3/8"=1'-0"

CITY OF TAMPA, FLORIDA
HOOKERS POINT WASTEWATER TREATMENT PLANT
PLANT EXPANSION
PHASE I DIVISION 5H3B
STANDBY POWER AND SLUDGE STORAGE FACILITIES

STANDBY POWER FACILITY
STRUCTURAL
REVISED PLANS, SECTIONS AND SCHEDULES

REVISES DRAWING NO. TS1-TS11

PROJ NO. 202G
DWG SD-3
SHEET
DATE MAY 1993 REV 1

5H3B_0TS-002B

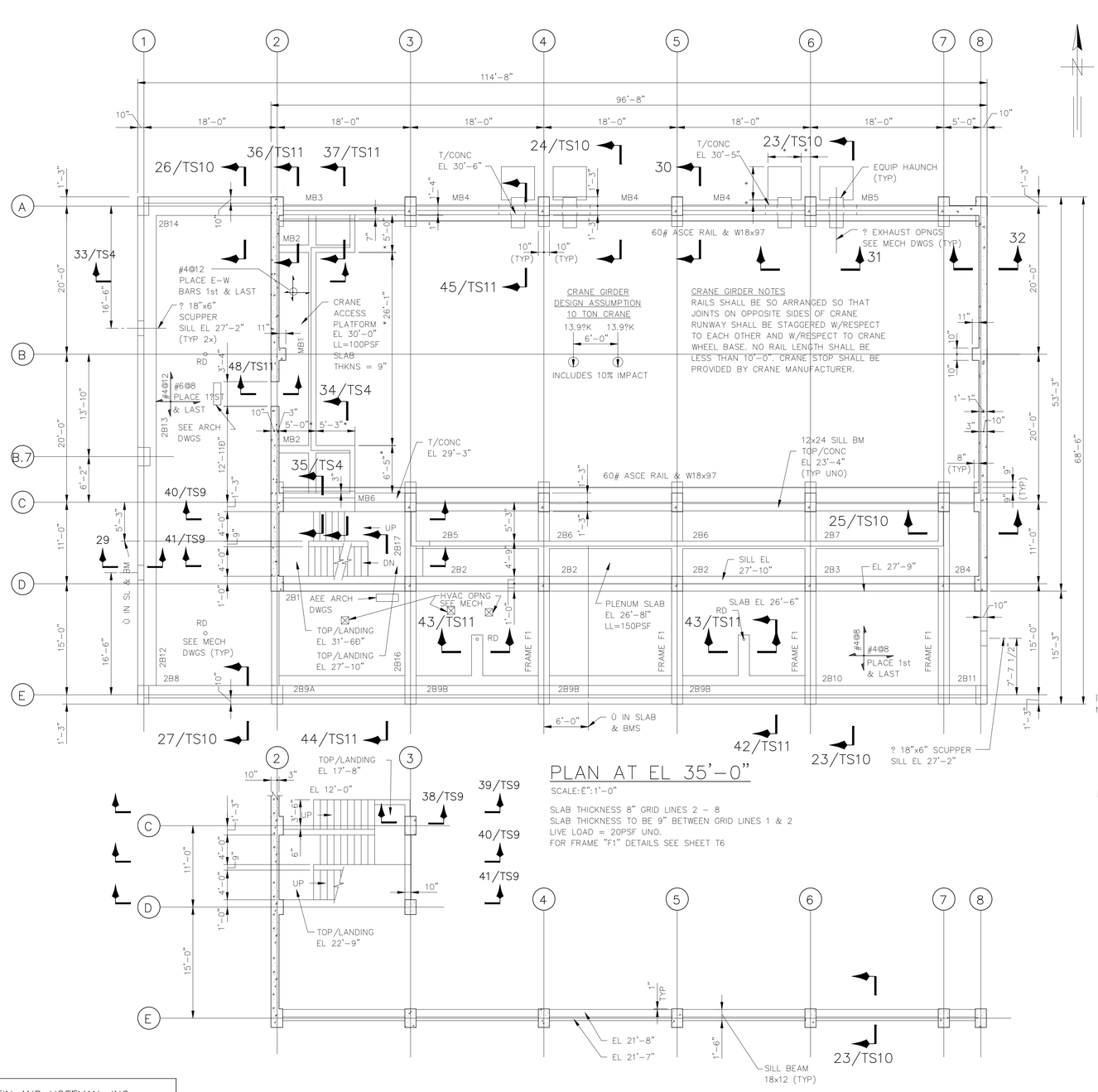

PLAN AT EL 35'-0"

SCALE: Ê": 1'-0"

SLAB THICKNESS 8" GRID LINES 2 – 8
SLAB THICKNESS TO BE 9" BETWEEN GRID LINES 1 & 2
LIVE LOAD = 20PSF UNO.
FOR FRAME "F1" DETAILS SEE SHEET T6

PART PLAN AT EL 23'-6"

SCALE: Ê": 1'-0"

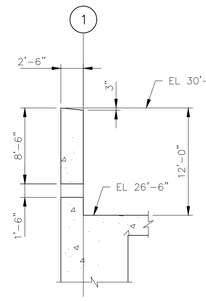

SECTION 29

SCALE: 1"=1'-0"

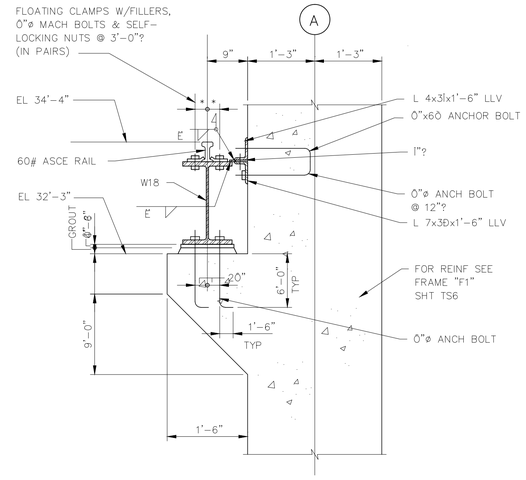

SECTION 30

SCALE: Ø"=1'-0"

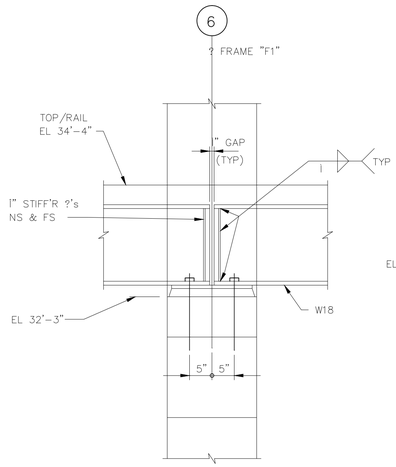

SECTION 31

SCALE: Ø"=1'-0"

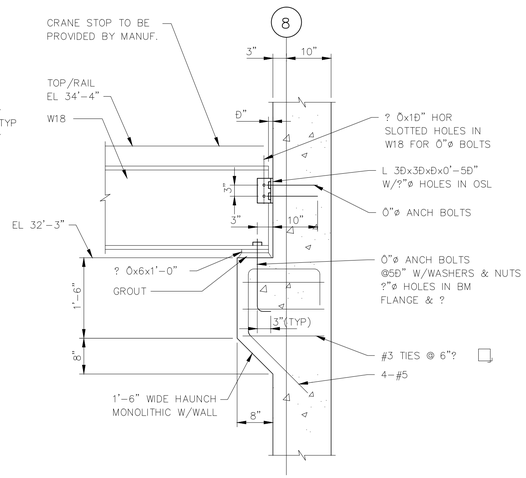

SECTION 32

SCALE: Ø"=1'-0"

See Supplemental Drawing SD-2 and SD-3

RECORD DRAWING

THIS RECORD DRAWING IS NOT WARRANTED BUT IS BELIEVED TO REPRESENT CONDITIONS UPON COMPLETION OF CONSTRUCTION WITHIN REASONABLE TOLERANCES, BASED UPON THE INFORMATION FURNISHED TO THE ENGINEER PERTAINING TO CHANGES MADE DURING CONSTRUCTION.

KLEIN AND HOFFMAN, INC.
CONSULTING ENGINEERS
4350 W. CYPRESS STREET
TAMPA, FLORIDA 33607 – 4135
PROJECT NO. 4187

GREELEY AND HANSEN
ENGINEERS
1715 NORTH WESTSHORE BOULEVARD
TAMPA, FLORIDA 33607–4135

DESIGNED WRC, JAH
DRAWN KCS
CHECKED WRC

APPROVED _____ DATE _____
_____ DATE _____
GREELEY AND HANSEN, ENGINEERS

NO.	DATE	APPD	REVISION
2	8/13/96		RECORD DWG REVISIONS

SCALE
1/8"=1'-0"
3/8"=1'-0"
3/4"=1'-0"

CITY OF TAMPA, FLORIDA
HOOKERS POINT WASTEWATER TREATMENT PLANT
PLANT EXPANSION
PHASE I DIVISION 5H3B
STANDBY POWER AND SLUDGE STORAGE FACILITIES

STANDBY POWER FACILITY
STRUCTURAL
PLAN AT EL 35'-0", EL 23'-6" AND SECTIONS

PROJ NO. 202G
DWG TS3
SHEET
DATE DECEMBER 1991 REV 2

5H3B_0TS-003

FILE: H3B-TS03 SCALE: 1:1 09/17, 1996 at 07:22 – *13_c4h (Hardware Lock)*

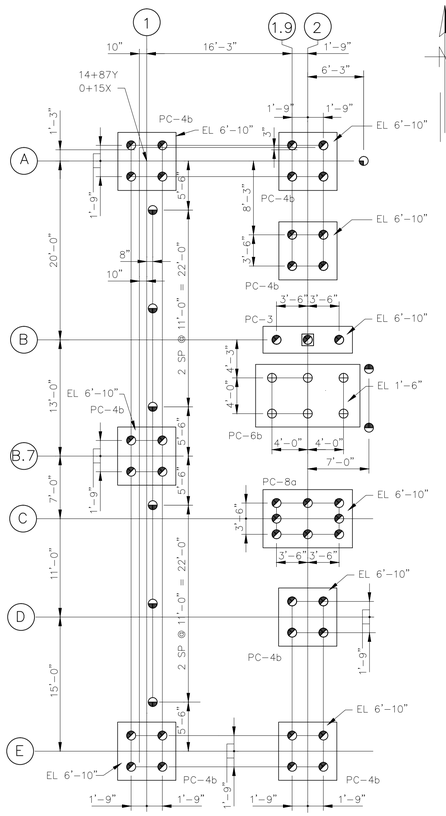

FOR REMAINDER OF PLAN, SEE DRAWING TS1

REVISED PILE PLAN

SCALE: 1"=1'-0"

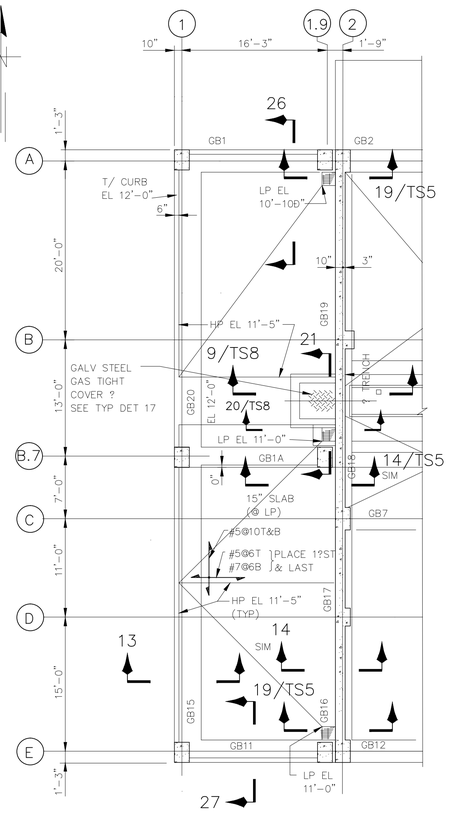

FOR REMAINDER OF PLAN, SEE DRAWING TS2

REVISED PLAN AT EL 12'-0"

SCALE: 1"=1'-0"

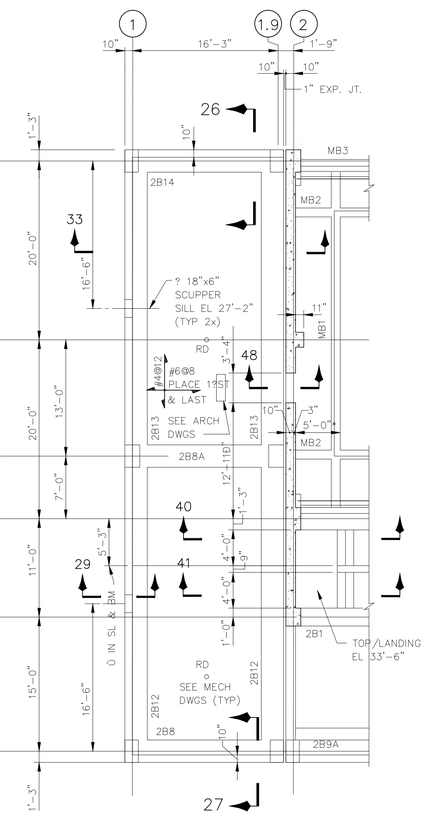

FOR REMAINDER OF PLAN, SEE DRAWING TS3

REVISED PLAN AT EL 35'-0"

SCALE: 1"=1'-0"

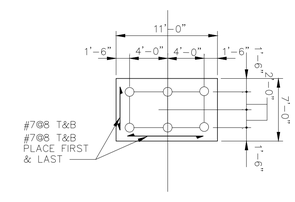

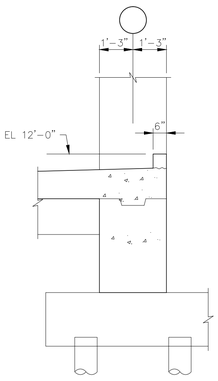

FOR REMAINDER OF SECTION, SEE DRAWING TS10

REVISED SECTION 26 (SHOWN)
REVISED SECTION 27 (OPP HAND)

SCALE: 1"=1'-0"

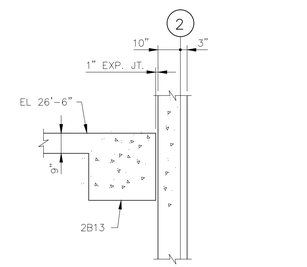

FOR REMAINDER OF SECTION, SEE DRAWING TS4

REVISED SECTION 33

SCALE: 1"=1'-0"

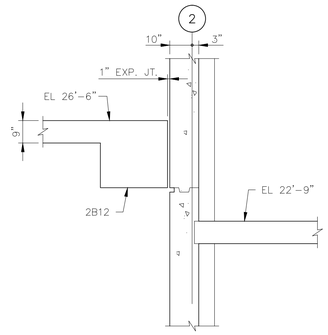

FOR REMAINDER OF SECTION, SEE DRAWING TS9

REVISED SECTION 40
REVISED SECTION 41

SCALE: 1"=1'-0"

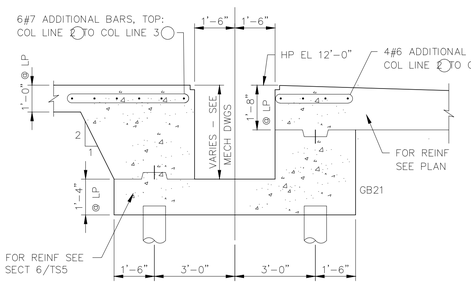

REPLACES SECTION ON DRAWING TS2

REVISED SECTION 4

SCALE: 1"=1'-0"

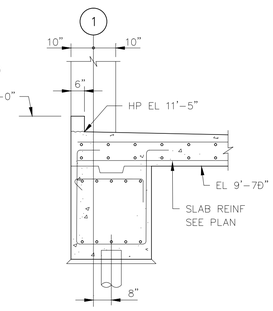

REPLACES SECTION ON DRAWING TS5

REVISED SECTION 13

SCALE: 1"=1'-0"

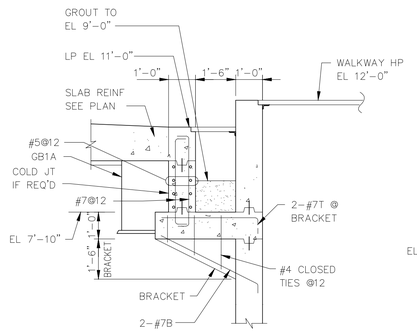

FOR REMAINDER OF SECTION, SEE DRAWING TS8

REVISED SECTION 21

SCALE: 1"=1'-0"

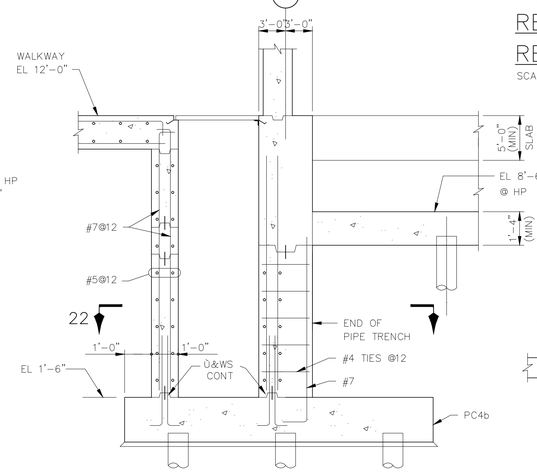

REPLACES SECTION ON DRAWING TS8

REVISED SECTION 9

SCALE: 1"=1'-0"

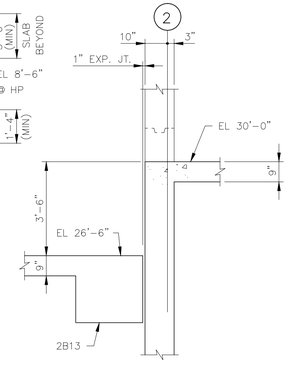

FOR REMAINDER OF SECTION, SEE DRAWING TS11

REVISED SECTION 48

SCALE: 1"=1'-0"

REVISES DRAWING NO. TS1-TS11

KLEIN AND HOFFMAN, INC.
CONSULTING ENGINEERS
4350 W. CYPRESS STREET
TAMPA, FLORIDA 33607 - 4135
PROJECT NO. 4187

GREELEY AND HANSEN
ENGINEERS
4350 WEST CYPRESS STREET
TAMPA, FLORIDA 33607-4135

DESIGNED JVT
DRAWN SKC
CHECKED SKC

APPROVED
DATE
DATE
GREELEY AND HANSEN, ENGINEERS

NO.	DATE	APPD	REVISION

SCALE
8 0 8 16 FT 1/8"=1'-0"
1 0 1 2 3 4 5 6 7 FT 3/8"=1'-0"

CITY OF TAMPA, FLORIDA
HOOKERS POINT WASTEWATER TREATMENT PLANT
PLANT EXPANSION
PHASE I DIVISION 5H3B
STANDBY POWER AND SLUDGE STORAGE FACILITIES

STANDBY POWER FACILITY
STRUCTURAL
REVISED PLANS, SECTIONS AND SCHEDULES

PROJ NO. 202G
DWG SD-2
SHEET
DATE MAY 1993 REV 0

5H3B_0TS-003A

FILE: H3B0002 SCALE: 1:96 05/10, 1993 at 09:18 #01.2*

REVISED BEAM SCHEDULE

FOR REMAINDER OF BEAM SCHEDULE, SEE DRAWINGS TS7 & TS8

AREA	MARK	SIZE W X D	BOTT BARS	TOP BARS A	TOP BARS B	TOP BARS C	W OR S SUPPORT / E OR N SUPPORT	STIRRUPS SIZE	STIRRUPS SPA EA END	STIRRUPS TYPE	REMARKS
	GB1	30x52	6-#7	6-#7 A1		6-#7 C1		#4	@12 THROUGHOUT	S2	BEAM DEPTH TAKEN FROM EL 11'-5"
	GB11	30x52	6-#7	4-#7 A1		4-#7 C1		#4	@12	S2	BEAM DEPTH TAKEN FROM EL 11'-5"
	GB15	36x55	7-#7	5-#7 A1		5-#7 C1	COL B.7,1	#4	@6	S2	BEAM DEPTH TAKEN FROM LP EL 11'-5". SEE SEC 13/TS5
	GB16	24x62	6-#8*	6-#8 A1		6-#8 C1		#4	@6	S4	SEE DWG TS8 FOR GRADE BM SECTION
	GB17	24x62	6-#8*			6-#8 C1		#4	@6	S4	SEE DWG TS8 FOR GRADE BM SECTION
	GB18	24x62	6-#9*			6-#8 C1		#4	@6	S4	SEE DWG TS8 FOR GRADE BM SECTION
	GB19	24x62	6-#8*	6-#8 A1				#4	@6	S4	SEE DWG TS8 FOR GRADE BM SECTION
	GB20	36x55	7-#7	5-#7 A1				#4	@6	S2	BEAM DEPTH TAKEN FROM LP EL 11'-5". SEE SECT 13/TS5
	GB1A	24x52	6-#7	12 # A1			2'-6" / 2'-6"	#4	@6	S4	BEAM DEPTH TAKEN FROM EL 11'-5" 1/2 A1 EACH END
	2B8A	30x24	4-#8	6-#9 A1				#4	@8	S6	1/2 A1 EACH END

* LAP SPLICE 3 NOS BOTTOM BARS AT SUPPORTS

TYPE S4

NOTE:
PLAN, SECTIONS, BEAM SCHEDULE, COLUMN SCHEDULE AND OTHER DETAILS SHOWN HERE, SUPERSEDE THE RELEVANT DETAILS ON DRAWINGS TS1 THRU TS11.

COL. SCHEDULE

FOR REMAINDER OF COLUMN SCHEDULE, SEE DRAWING TS9

COLUMN MARK	A1.9 A1 B.7-1.9 B.7-1 E1.9 E1
HIGH ROOF EL 39'-6"	
LOW ROOF EL 26'-6"	
GROUND FLOOR HP EL 12'-0"	3-#9 / 20x30 / 8-#9T4
T/PILE CAP EL VARIES	

T4

REVISED PILE SCHEDULE

ITEM	MARK	NO. OF PILES	UPLIFT PILES	CUT-OFF ELEV.	REMARKS
		4	0	10'-8"	
		6	0	7'-2"	
		31	0	7'-3" (1)	
		17	0	8'-10	GENERATOR BASES (INCL. FUTURE BASE)
		8	0	7'-6	GENERATOR BASES
		6	0	-0'-10"	
		21	0	10'-4"	
		3	0	7'-8"	
		24	0	(-) 3'-4"	
		24	0	5'-0"	
		93	0	4'-6"	
		10	0	4'-0"	
		23	0	6'-11"	

TOTAL NUMBER OF PILES THIS SCHEDULE = 270

KLEIN AND HOFFMAN, INC.
CONSULTING ENGINEERS
4350 W. CYPRESS STREET
TAMPA, FLORIDA 33607 - 4135
PROJECT NO. 4187

GREELEY AND HANSEN
ENGINEERS
4350 WEST CYPRESS STREET
TAMPA, FLORIDA 33607-4135

DESIGNED JVT
DRAWN SKC
CHECKED SKC

APPROVED _____ DATE _____
_____ DATE _____
GREELEY AND HANSEN, ENGINEERS

NO.	DATE	APPD	REVISION
1	6/4/93	SKC	PILE SCHED. CUT-OFF ELEV.

SCALE
8 0 8 16 FT 1/8"=1'-0"
1 0 1 2 3 4 5 6 7 FT 3/8"=1'-0"

CITY OF TAMPA, FLORIDA
HOOKERS POINT WASTEWATER TREATMENT PLANT
PLANT EXPANSION
PHASE I DIVISION 5H3B
STANDBY POWER AND SLUDGE STORAGE FACILITIES

STANDBY POWER FACILITY
STRUCTURAL
REVISED PLANS, SECTIONS AND SCHEDULES

PROJ NO. 202G
DWG SD-3
SHEET
DATE MAY 1993 REV 1

REVISES DRAWING NO. TS1-TS11

FILE: H:\VCSH\5H3\DWG\5H3003 SCALE: 1:1 PLOT: MAY 14, 1993 at 14:28 "RT1 +2"

5H3B_0TS-003B

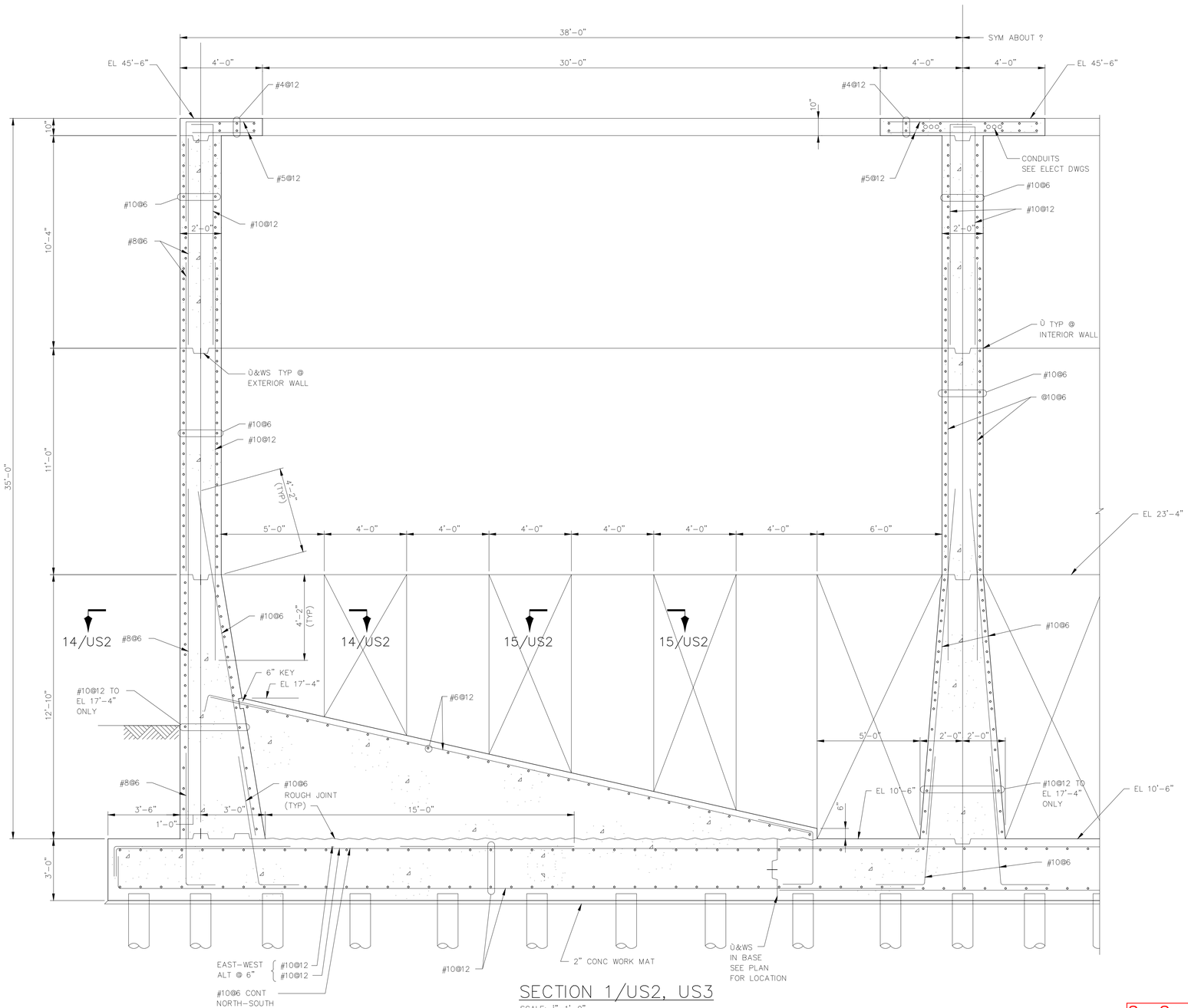

SECTION 1/US2, US3

SCALE: 1"=1'-0"

NOTES:

1. NORTH-SOUTH INTERIOR WALL IS NOT DESIGNED FOR FUTURE IN-FILL OF OPENINGS.
2. FOR PIPE PENETRATIONS SEE MECHANICAL DRAWINGS.

See Supplemental Drawing SD-2 and SD-3

RECORD DRAWING

THIS RECORD DRAWING IS NOT WARRANTED BUT IS BELIEVED TO REPRESENT CONDITIONS UPON COMPLETION OF CONSTRUCTION WITHIN REASONABLE TOLERANCES, BASED UPON THE INFORMATION FURNISHED TO THE ENGINEER PERTAINING TO CHANGES MADE DURING CONSTRUCTION.

FILE: H3B-7504 SCALE: 1:32 09/06, 1996 at 11:22 -- "13_s4h (Hardware Lock)"

KLEIN AND HOFFMAN, INC.
CONSULTING ENGINEERS
4350 W. CYPRESS STREET
TAMPA, FLORIDA 33607 - 4135
PROJECT NO. 4187

GREELEY AND HANSEN
ENGINEERS
1715 NORTH WESTSHORE BOULEVARD
TAMPA, FLORIDA 33607-4135

DESIGNED WRC, JAH
DRAWN KCS
CHECKED WRC

APPROVED _____ DATE _____
_____ DATE _____
GREELEY AND HANSEN, ENGINEERS

NO.	DATE	APPD	REVISION
2	8/15/96		RECORD DWG REVISIONS

SCALE
SCALE
1 0 1 2 3 4 5 6 7 FT
3/8"=1'-0"

CITY OF TAMPA, FLORIDA
HOOKERS POINT WASTEWATER TREATMENT PLANT
PLANT EXPANSION
PHASE I DIVISION 5H3B
STANDBY POWER AND SLUDGE STORAGE FACILITIES

STANDBY POWER FACILITY
STRUCTURAL
HIGH ROOF PLAN AND SECTIONS

PROJ NO. 202G
DWG TS4
SHEET
DATE DECEMBER 1991 REV 2

5H3B_0TS-004

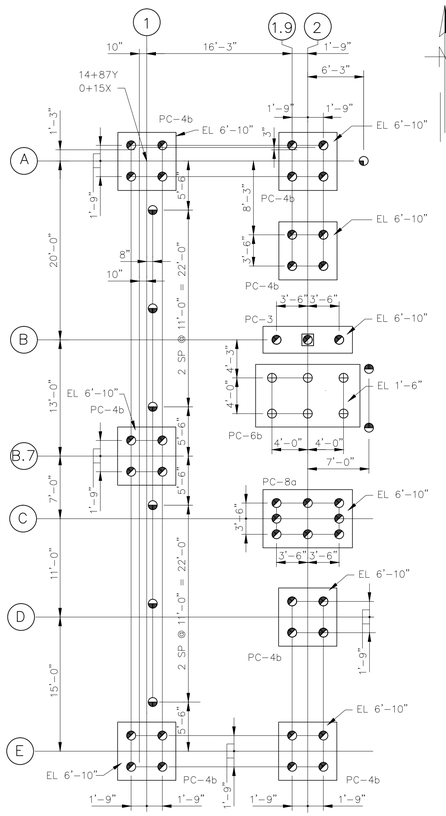

FOR REMAINDER OF PLAN, SEE DRAWING TS1

REVISED PILE PLAN

SCALE: 1"=1'-0"

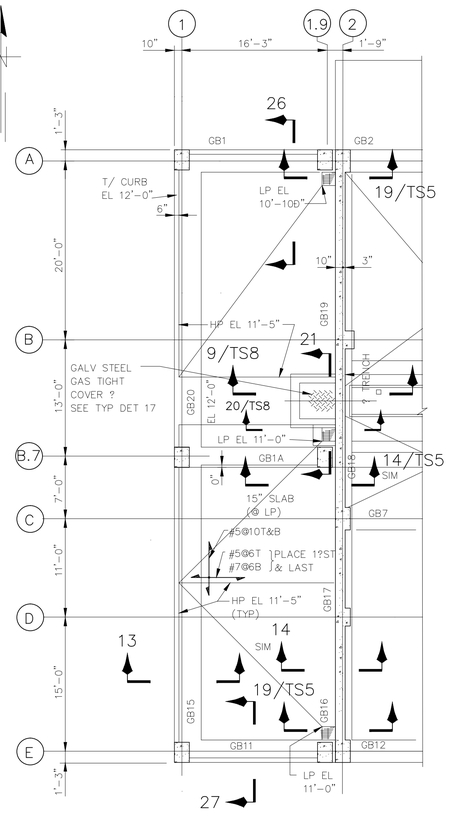

FOR REMAINDER OF PLAN, SEE DRAWING TS2

REVISED PLAN AT EL 12'-0"

SCALE: 1"=1'-0"

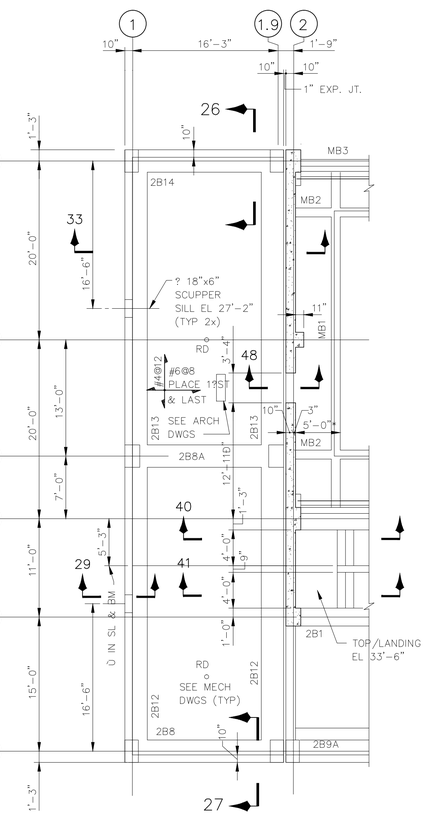

FOR REMAINDER OF PLAN, SEE DRAWING TS3

REVISED PLAN AT EL 35'-0"

SCALE: 1"=1'-0"

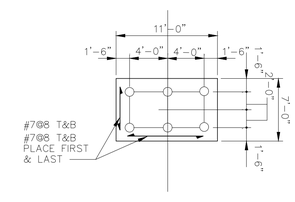

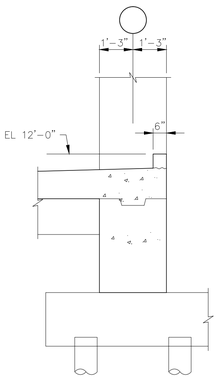

FOR REMAINDER OF SECTION, SEE DRAWING TS10

REVISED SECTION 26 (SHOWN)
REVISED SECTION 27 (OPP HAND)

SCALE: 1"=1'-0"

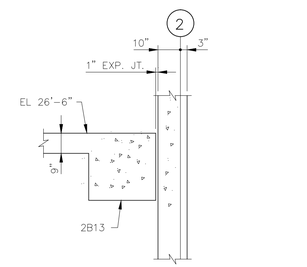

FOR REMAINDER OF SECTION, SEE DRAWING TS4

REVISED SECTION 33

SCALE: 1"=1'-0"

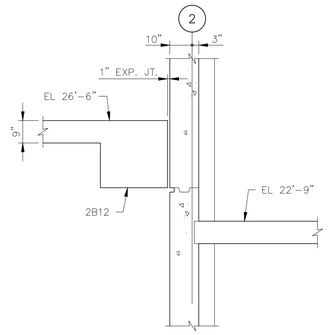

FOR REMAINDER OF SECTION, SEE DRAWING TS9

REVISED SECTION 40
REVISED SECTION 41

SCALE: 1"=1'-0"

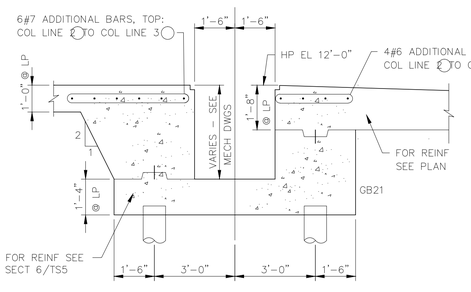

REPLACES SECTION ON DRAWING TS2

REVISED SECTION 4

SCALE: 1"=1'-0"

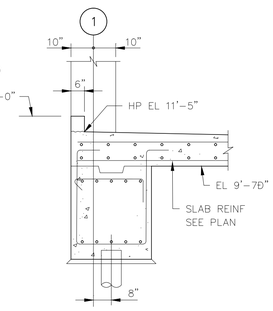

REPLACES SECTION ON DRAWING TS5

REVISED SECTION 13

SCALE: 1"=1'-0"

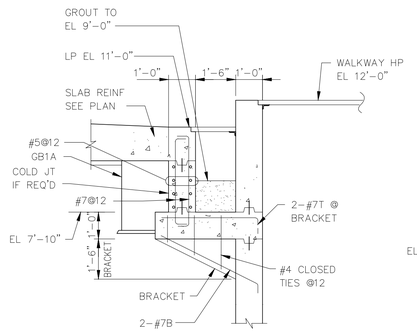

FOR REMAINDER OF SECTION, SEE DRAWING TS8

REVISED SECTION 21

SCALE: 1"=1'-0"

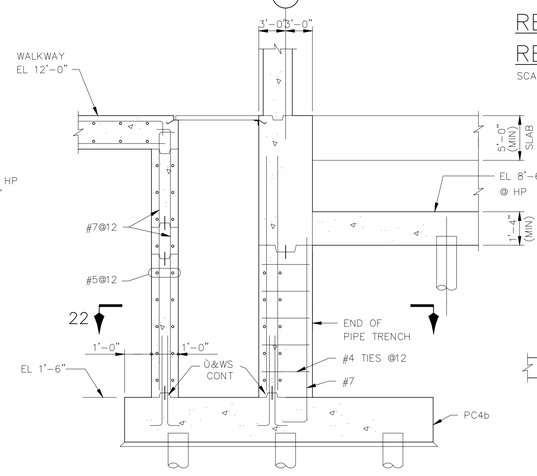

REPLACES SECTION ON DRAWING TS8

REVISED SECTION 9

SCALE: 1"=1'-0"

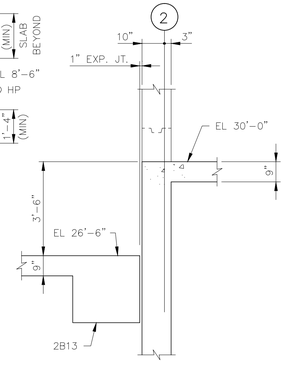

FOR REMAINDER OF SECTION, SEE DRAWING TS11

REVISED SECTION 48

SCALE: 1"=1'-0"

REVISES DRAWING NO. TS1-TS11

KLEIN AND HOFFMAN, INC.
CONSULTING ENGINEERS
4350 W. CYPRESS STREET
TAMPA, FLORIDA 33607 - 4135
PROJECT NO. 4187

GREELEY AND HANSEN
ENGINEERS
4350 WEST CYPRESS STREET
TAMPA, FLORIDA 33607-4135

DESIGNED JVT
DRAWN SKC
CHECKED SKC

APPROVED _____ DATE _____
_____ DATE _____
GREELEY AND HANSEN, ENGINEERS

NO.	DATE	APPD	REVISION

SCALE
8 0 8 16 FT 1/8"=1'-0"
1 0 1 2 3 4 5 6 7 FT 3/8"=1'-0"

CITY OF TAMPA, FLORIDA
HOOKERS POINT WASTEWATER TREATMENT PLANT
PLANT EXPANSION
PHASE I DIVISION 5H3B
STANDBY POWER AND SLUDGE STORAGE FACILITIES

STANDBY POWER FACILITY
STRUCTURAL
REVISED PLANS, SECTIONS AND SCHEDULES

PROJ NO. 202G
DWG SD-2
SHEET
DATE MAY 1993 REV 0

5H3B_0TS-004A

FILE: H3B0002 SCALE: 1:96 05/10, 1993 at 09:18 #01.2#

REVISED BEAM SCHEDULE

FOR REMAINDER OF BEAM SCHEDULE, SEE DRAWINGS TS7 & TS8

AREA	MARK	SIZE W X D	BOTT BARS	TOP BARS A	TOP BARS B	TOP BARS C	W OR S SUPPORT / E OR N SUPPORT	STIRRUPS SIZE	STIRRUPS SPA EA END	STIRRUPS TYPE	REMARKS
	GB1	30x52	6-#7	6-#7 A1		6-#7 C1		#4	@12 THROUGHOUT	S2	BEAM DEPTH TAKEN FROM EL 11'-5"
	GB11	30x52	6-#7	4-#7 A1		4-#7 C1		#4	@12	S2	BEAM DEPTH TAKEN FROM EL 11'-5"
	GB15	36x55	7-#7	5-#7 A1		5-#7 C1	COL B.7,1	#4	@6	S2	BEAM DEPTH TAKEN FROM LP EL 11'-5". SEE SEC 13/TS5
	GB16	24x62	6-#8*	6-#8 A1		6-#8 C1		#4	@6	S4	SEE DWG TS8 FOR GRADE BM SECTION
	GB17	24x62	6-#8*			6-#8 C1		#4	@6	S4	SEE DWG TS8 FOR GRADE BM SECTION
	GB18	24x62	6-#9*			6-#8 C1		#4	@6	S4	SEE DWG TS8 FOR GRADE BM SECTION
	GB19	24x62	6-#8*	6-#8 A1				#4	@6	S4	SEE DWG TS8 FOR GRADE BM SECTION
	GB20	36x55	7-#7	5-#7 A1				#4	@6	S2	BEAM DEPTH TAKEN FROM LP EL 11'-5". SEE SECT 13/TS5
	GB1A	24x52	6-#7	12 # A1			2'-6" / 2'-6"	#4	@6	S4	BEAM DEPTH TAKEN FROM EL 11'-5" 1/2 A1 EACH END
	2B8A	30x24	4-#8	6-#9 A1				#4	@8	S6	1/2 A1 EACH END

* LAP SPLICE 3 NOS BOTTOM BARS AT SUPPORTS

TYPE S4

NOTE:
PLAN, SECTIONS, BEAM SCHEDULE, COLUMN SCHEDULE AND OTHER DETAILS SHOWN HERE, SUPERSEDE THE RELEVANT DETAILS ON DRAWINGS TS1 THRU TS11.

COL. SCHEDULE

FOR REMAINDER OF COLUMN SCHEDULE, SEE DRAWING TS9

COLUMN MARK	A1.9 A1 B.7-1.9 B.7-1 E1.9 E1
HIGH ROOF EL 39'-6"	
LOW ROOF EL 26'-6"	
GROUND FLOOR HP EL 12'-0"	3-#9 / 20x30 8-#9T4
T/PILE CAP EL VARIES	

T4

REVISED PILE SCHEDULE

ITEM	MARK	NO. OF PILES	UPLIFT PILES	CUT-OFF ELEV.	REMARKS
		4	0	10'-8"	
		6	0	7'-2"	
		31	0	7'-3" (1)	
		17	0	8'-10	GENERATOR BASES (INCL. FUTURE BASE)
		8	0	7'-6	GENERATOR BASES
		6	0	-0'-10"	
		21	0	10'-4"	
		3	0	7'-8"	
		24	0	(-) 3'-4"	
		24	0	5'-0"	
		93	0	4'-6"	
		10	0	4'-0"	
		23	0	6'-11"	

TOTAL NUMBER OF PILES THIS SCHEDULE = 270

KLEIN AND HOFFMAN, INC.
CONSULTING ENGINEERS
4350 W. CYPRESS STREET
TAMPA, FLORIDA 33607 - 4135
PROJECT NO. 4187

GREELEY AND HANSEN
ENGINEERS
4350 WEST CYPRESS STREET
TAMPA, FLORIDA 33607-4135

DESIGNED JVT
DRAWN SKC
CHECKED SKC

APPROVED _____ DATE _____
_____ DATE _____
GREELEY AND HANSEN, ENGINEERS

NO.	DATE	APPD	REVISION
1	6/4/93	SKC	PILE SCHED. CUT-OFF ELEV.

SCALE
8 0 8 16 FT 1/8"=1'-0"
1 0 1 2 3 4 5 6 7 FT 3/8"=1'-0"

CITY OF TAMPA, FLORIDA
HOOKERS POINT WASTEWATER TREATMENT PLANT
PLANT EXPANSION
PHASE I DIVISION 5H3B
STANDBY POWER AND SLUDGE STORAGE FACILITIES

STANDBY POWER FACILITY
STRUCTURAL
REVISED PLANS, SECTIONS AND SCHEDULES

PROJ NO. 202G
DWG SD-3
SHEET
DATE MAY 1993 REV 1

REVISES DRAWING NO. TS1-TS11

FILE: H:\VCSH\SW\SD\SD0003 SCALE: 1:1 PLOT: MAY 14, 1993 at 14:28 "PDT -12"

5H3B_0TS-004B

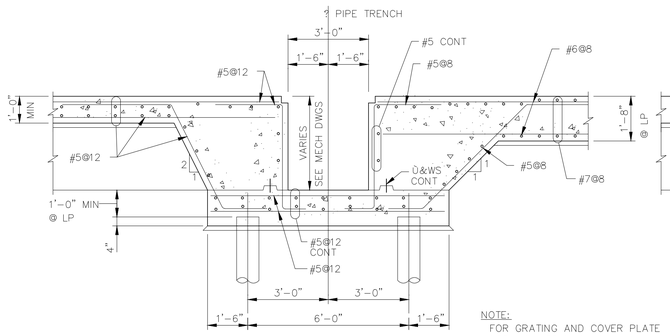

NOTE:
FOR GRATING AND COVER PLATE DETAILS, SEE DWG AS2

SECTION 6/TS2
SCALE: 1"=1'-0"

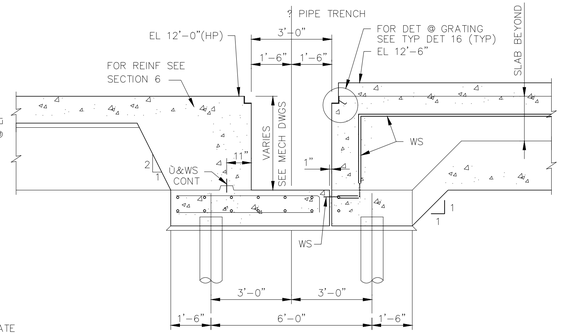

SECTION 7/TS2
SCALE: 1"=1'-0"

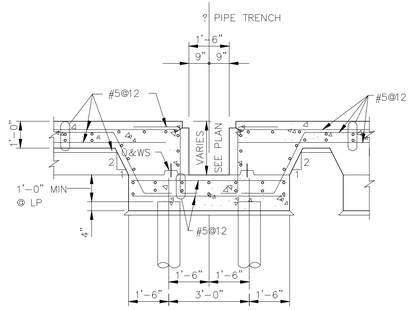

SECTION 8/TS2
SCALE: 1"=1'-0"

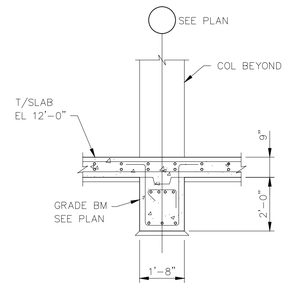

SECTION 10/TS2
SCALE: 1"=1'-0"

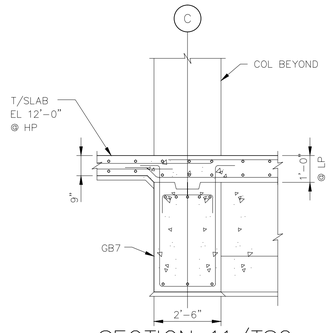

SECTION 11/TS2
SCALE: 1"=1'-0"

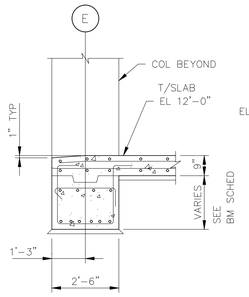

SECTION 12/TS2
SCALE: 1"=1'-0"

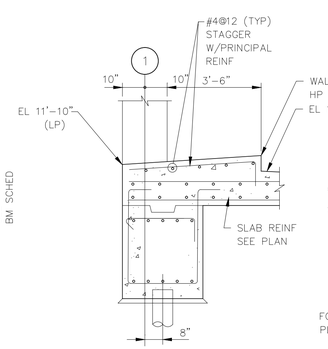

SECTION 13/TS2
SCALE: 1"=1'-0"

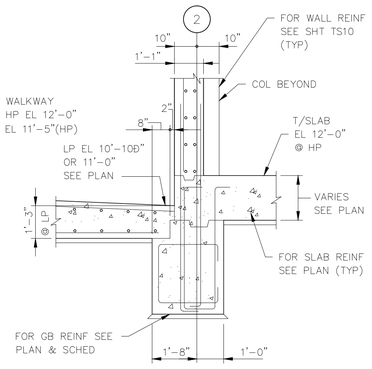

SECTION 14/TS2
SCALE: 1"=1'-0"

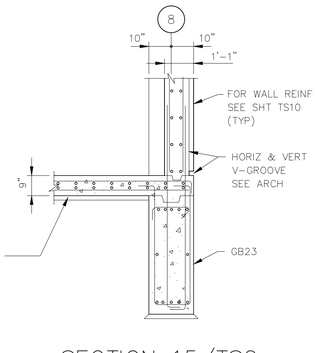

SECTION 15/TS2
SCALE: 1"=1'-0"

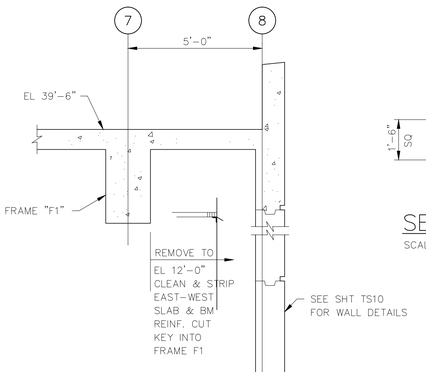

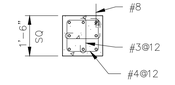

SECTION 51
SCALE: 1"=1'-0"

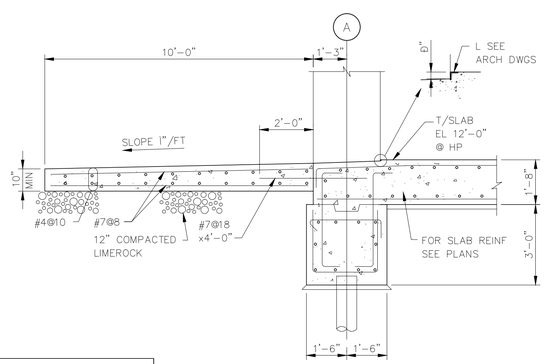

SECTION 16/TS2
SCALE: 1"=1'-0"

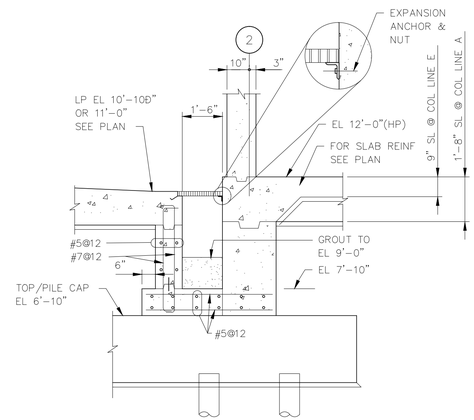

SECTION 19/TS2
SCALE: 1"=1'-0"

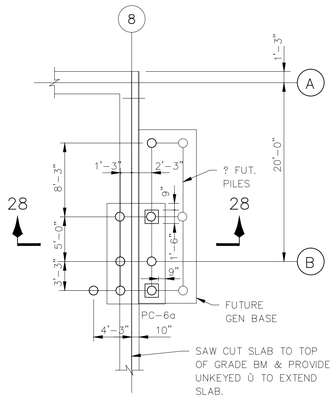

PART PLAN – EL 12'-0"
SCALE: £"=1'-0"

See Supplemental Drawing SD-2 and SD-3

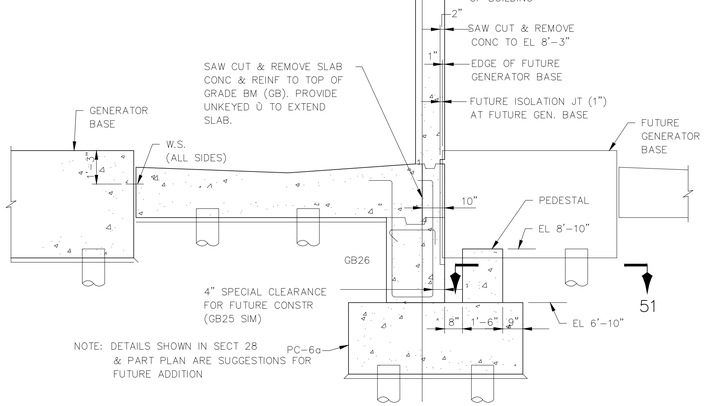

SECTION 28
SCALE: 1"=1'-0"

RECORD DRAWING
THIS RECORD DRAWING IS NOT WARRANTED BUT IS BELIEVED TO REPRESENT CONDITIONS UPON COMPLETION OF CONSTRUCTION WITHIN REASONABLE TOLERANCES, BASED UPON THE INFORMATION FURNISHED TO THE ENGINEER PERTAINING TO CHANGES MADE DURING CONSTRUCTION.

KLEIN AND HOFFMAN, INC.
CONSULTING ENGINEERS
4350 W. CYPRESS STREET
TAMPA, FLORIDA 33607 – 4135
PROJECT NO. 4187

GREELEY AND HANSEN
ENGINEERS
1715 NORTH WESTSHORE BOULEVARD
TAMPA, FLORIDA 33607-4135

DESIGNED	WRC, JAH
DRAWN	KCS
CHECKED	WRC

APPROVED _____ DATE _____
_____ DATE _____
GREELEY AND HANSEN, ENGINEERS

NO.	DATE	APPD	REVISION
3	8/1/96		RECORD DWG REVISIONS

SCALE
8 0 8 16 FT 1/8"=1'-0"
1 0 1 2 3 4 5 6 7 FT 3/8"=1'-0"

CITY OF TAMPA, FLORIDA
HOOKERS POINT WASTEWATER TREATMENT PLANT
PLANT EXPANSION
PHASE I DIVISION 5H3B
STANDBY POWER AND SLUDGE STORAGE FACILITIES

STANDBY POWER FACILITY
STRUCTURAL
SECTIONS

PROJ NO. 202G
DWG TS5
SHEET
DATE DECEMBER 1991 REV 3

5H3B_0TS-005

FILE: H3B-TS05 SCALE: 1.32 09/06, 1996 at 11:37 – *13_cdh (Hardware Lock)*

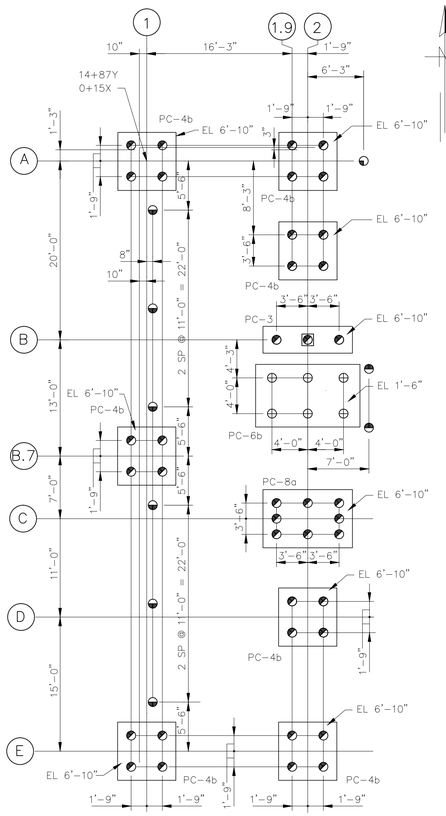

FOR REMAINDER OF PLAN, SEE DRAWING TS1

REVISED PILE PLAN

SCALE: 1"=1'-0"

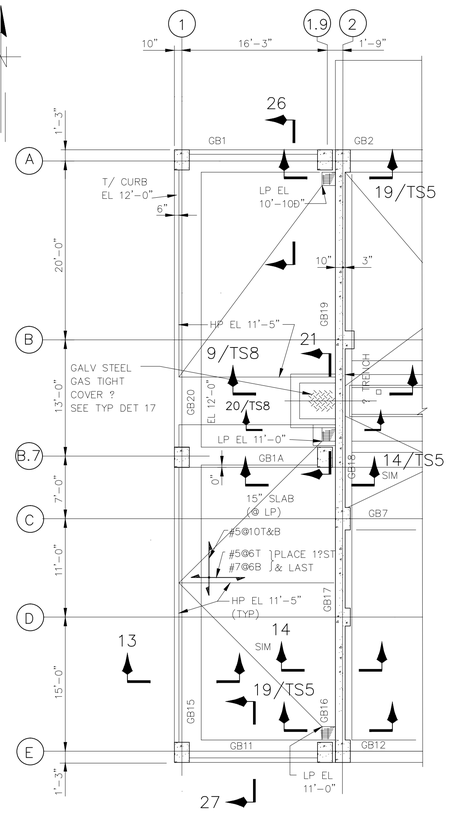

FOR REMAINDER OF PLAN, SEE DRAWING TS2

REVISED PLAN AT EL 12'-0"

SCALE: 1"=1'-0"

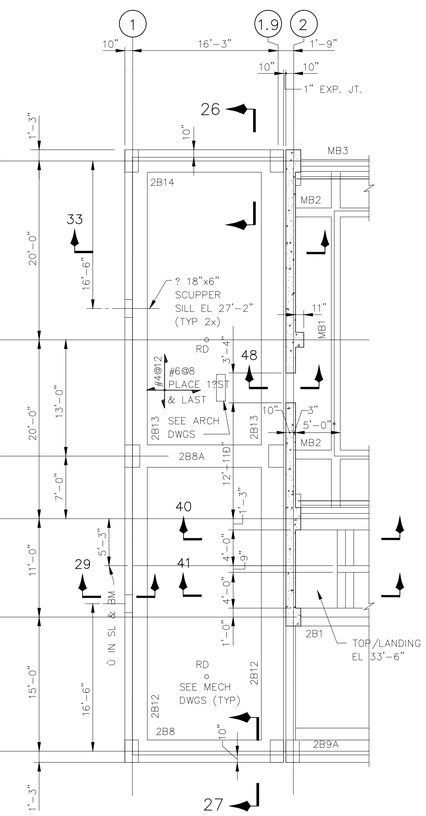

FOR REMAINDER OF PLAN, SEE DRAWING TS3

REVISED PLAN AT EL 35'-0"

SCALE: 1"=1'-0"

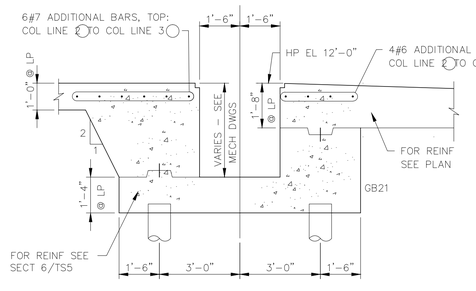

REPLACES SECTION ON DRAWING TS2

REVISED SECTION 4

SCALE: 1"=1'-0"

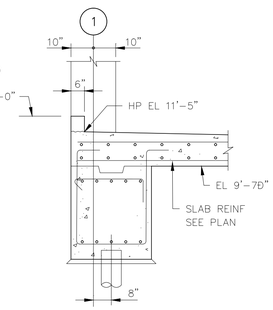

REPLACES SECTION ON DRAWING TS5

REVISED SECTION 13

SCALE: 1"=1'-0"

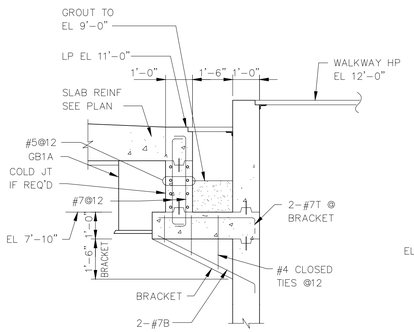

FOR REMAINDER OF SECTION, SEE DRAWING TS8

REVISED SECTION 21

SCALE: 1"=1'-0"

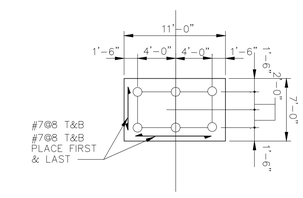

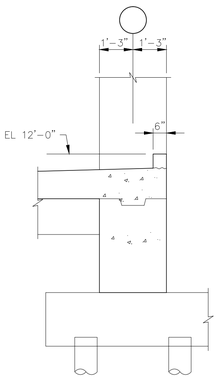

FOR REMAINDER OF SECTION, SEE DRAWING TS10

REVISED SECTION 26 (SHOWN)

REVISED SECTION 27 (OPP HAND)

SCALE: 1"=1'-0"

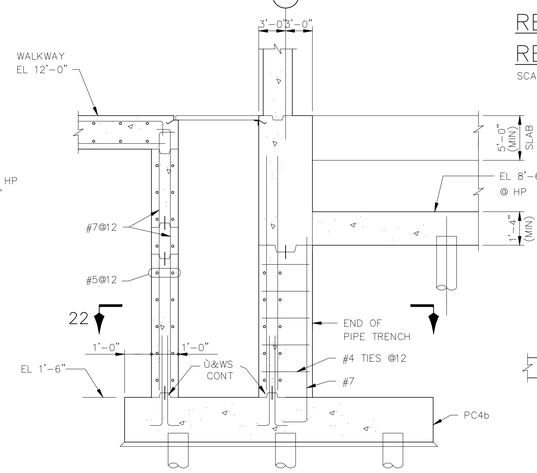

REPLACES SECTION ON DRAWING TS8

REVISED SECTION 9

SCALE: 1"=1'-0"

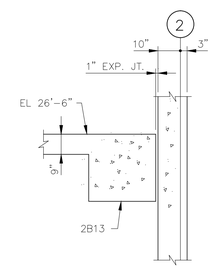

FOR REMAINDER OF SECTION, SEE DRAWING TS4

REVISED SECTION 33

SCALE: 1"=1'-0"

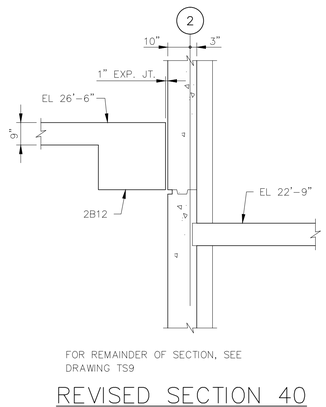

FOR REMAINDER OF SECTION, SEE DRAWING TS9

REVISED SECTION 40

REVISED SECTION 41

SCALE: 1"=1'-0"

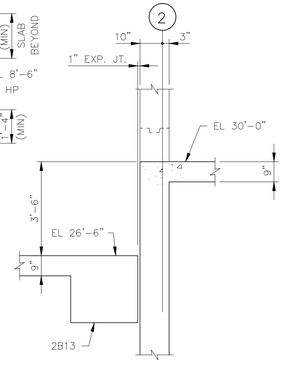

FOR REMAINDER OF SECTION, SEE DRAWING TS11

REVISED SECTION 48

SCALE: 1"=1'-0"

REVISES DRAWING NO. TS1-TS11

KLEIN AND HOFFMAN, INC.
CONSULTING ENGINEERS
4350 W. CYPRESS STREET
TAMPA, FLORIDA 33607 - 4135
PROJECT NO. 4187

GREELEY AND HANSEN
ENGINEERS
4350 WEST CYPRESS STREET
TAMPA, FLORIDA 33607-4135

DESIGNED JVT
DRAWN SKC
CHECKED SKC

APPROVED
DATE
DATE
GREELEY AND HANSEN, ENGINEERS

NO.	DATE	APPD	REVISION

SCALE
8 0 8 16 FT 1/8"=1'-0"
1 0 1 2 3 4 5 6 7 FT 3/8"=1'-0"

CITY OF TAMPA, FLORIDA
HOOKERS POINT WASTEWATER TREATMENT PLANT
PLANT EXPANSION
PHASE I DIVISION 5H3B
STANDBY POWER AND SLUDGE STORAGE FACILITIES

STANDBY POWER FACILITY
STRUCTURAL
REVISED PLANS, SECTIONS AND SCHEDULES

PROJ NO. 202G
DWG SD-2
SHEET
DATE MAY 1993 REV 0

5H3B_0TS-005A

FILE: H3B0002 SCALE: 1:96 05/10, 1993 at 09:18 #01.2*

REVISED BEAM SCHEDULE

FOR REMAINDER OF BEAM SCHEDULE, SEE DRAWINGS TS7 & TS8

AREA	MARK	SIZE W X D	BOTT BARS	TOP BARS A	TOP BARS B	TOP BARS C	W OR S SUPPORT / E OR N SUPPORT	STIRRUPS SIZE	STIRRUPS SPA EA END	STIRRUPS TYPE	REMARKS
	GB1	30x52	6-#7	6-#7 A1		6-#7 C1		#4	@12 THROUGHOUT	S2	BEAM DEPTH TAKEN FROM EL 11'-5"
	GB11	30x52	6-#7	4-#7 A1		4-#7 C1		#4	@12	S2	BEAM DEPTH TAKEN FROM EL 11'-5"
	GB15	36x55	7-#7	5-#7 A1		5-#7 C1	COL B.7,1	#4	@6	S2	BEAM DEPTH TAKEN FROM LP EL 11'-5". SEE SEC 13/TS5
	GB16	24x62	6-#8*	6-#8 A1		6-#8 C1		#4	@6	S4	SEE DWG TS8 FOR GRADE BM SECTION
	GB17	24x62	6-#8*			6-#8 C1		#4	@6	S4	SEE DWG TS8 FOR GRADE BM SECTION
	GB18	24x62	6-#9*			6-#8 C1		#4	@6	S4	SEE DWG TS8 FOR GRADE BM SECTION
	GB19	24x62	6-#8*	6-#8 A1				#4	@6	S4	SEE DWG TS8 FOR GRADE BM SECTION
	GB20	36x55	7-#7	5-#7 A1				#4	@6	S2	BEAM DEPTH TAKEN FROM LP EL 11'-5". SEE SECT 13/TS5
	GB1A	24x52	6-#7	12 # A1			2'-6" / 2'-6"	#4	@6	S4	BEAM DEPTH TAKEN FROM EL 11'-5" 1/2 A1 EACH END
	2B8A	30x24	4-#8	6-#9 A1				#4	@8	S6	1/2 A1 EACH END

* LAP SPLICE 3 NOS BOTTOM BARS AT SUPPORTS

TYPE S4

NOTE:
PLAN, SECTIONS, BEAM SCHEDULE, COLUMN SCHEDULE AND OTHER DETAILS SHOWN HERE, SUPERSEDE THE RELEVANT DETAILS ON DRAWINGS TS1 THRU TS11.

COL. SCHEDULE

FOR REMAINDER OF COLUMN SCHEDULE, SEE DRAWING TS9

COLUMN MARK	A1.9 A1 B.7-1.9 B.7-1 E1.9 E1
HIGH ROOF EL 39'-6"	
LOW ROOF EL 26'-6"	
GROUND FLOOR HP EL 12'-0"	3-#9 / 20x30 8-#9T4
T/PILE CAP EL VARIES	

T4

REVISED PILE SCHEDULE

ITEM	MARK	NO. OF PILES	UPLIFT PILES	CUT-OFF ELEV.	REMARKS
		4	0	10'-8"	
		6	0	7'-2"	
		31	0	7'-3" (1)	
		17	0	8'-10	GENERATOR BASES (INCL. FUTURE BASE)
		8	0	7'-6	GENERATOR BASES
		6	0	-0'-10"	
		21	0	10'-4"	
		3	0	7'-8"	
		24	0	(-) 3'-4"	
		24	0	5'-0"	
		93	0	4'-6"	
		10	0	4'-0"	
		23	0	6'-11"	

TOTAL NUMBER OF PILES THIS SCHEDULE = 270

KLEIN AND HOFFMAN, INC.
CONSULTING ENGINEERS
4350 W. CYPRESS STREET
TAMPA, FLORIDA 33607 - 4135
PROJECT NO. 4187

GREELEY AND HANSEN
ENGINEERS
4350 WEST CYPRESS STREET
TAMPA, FLORIDA 33607-4135

DESIGNED JVT
DRAWN SKC
CHECKED SKC

APPROVED _____ DATE _____
_____ DATE _____
GREELEY AND HANSEN, ENGINEERS

NO.	DATE	APPD	REVISION
1	6/4/93	SKC	PILE SCHED. CUT-OFF ELEV.

SCALE
8 0 8 16 FT 1/8"=1'-0"
1 0 1 2 3 4 5 6 7 FT 3/8"=1'-0"

CITY OF TAMPA, FLORIDA
HOOKERS POINT WASTEWATER TREATMENT PLANT
PLANT EXPANSION
PHASE I DIVISION 5H3B
STANDBY POWER AND SLUDGE STORAGE FACILITIES

STANDBY POWER FACILITY
STRUCTURAL
REVISED PLANS, SECTIONS AND SCHEDULES

PROJ NO. 202G
DWG SD-3
SHEET
DATE MAY 1993 REV 1

REVISES DRAWING NO. TS1-TS11

FILE: H:\VCSH\5H3\DWG\5H3003 SCALE: 1:1 PLOT: MAY 14, 1993 at 14:28 "RT1.12"

5H3B_0TS-005B

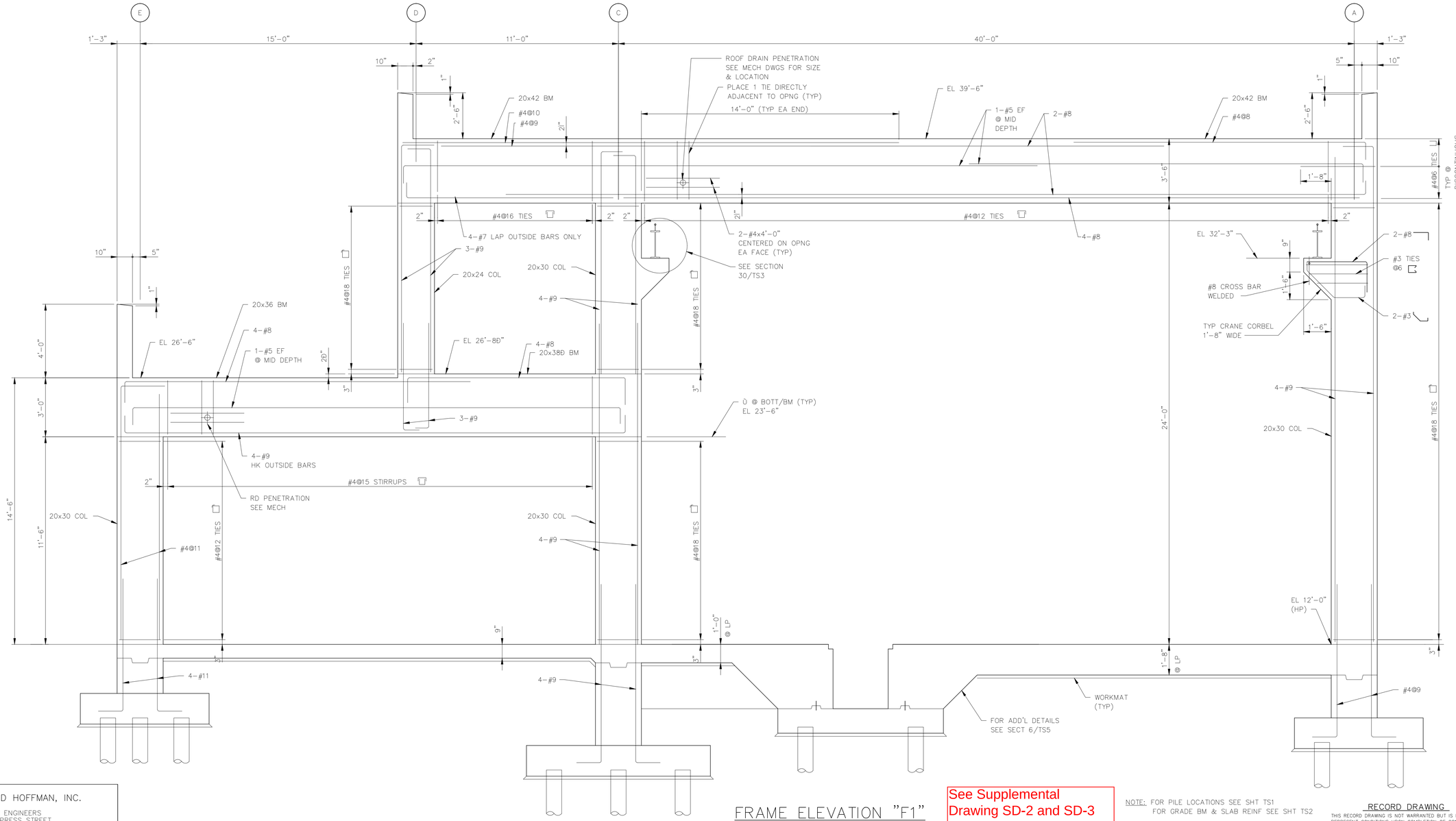

FRAME ELEVATION "F1"

SCALE: 1"=1'-0"

See Supplemental Drawing SD-2 and SD-3

NOTE: FOR PILE LOCATIONS SEE SHT TS1
FOR GRADE BM & SLAB REINF SEE SHT TS2

RECORD DRAWING

THIS RECORD DRAWING IS NOT WARRANTED BUT IS BELIEVED TO REPRESENT CONDITIONS UPON COMPLETION OF CONSTRUCTION WITHIN REASONABLE TOLERANCES, BASED UPON THE INFORMATION FURNISHED TO THE ENGINEER PERTAINING TO CHANGES MADE DURING CONSTRUCTION.

KLEIN AND HOFFMAN, INC.
CONSULTING ENGINEERS
4350 W. CYPRESS STREET
TAMPA, FLORIDA 33607 – 4135
PROJECT NO. 4187

GREELEY AND HANSEN
ENGINEERS
1715 NORTH WESTSHORE BOULEVARD
TAMPA, FLORIDA 33607-4135

DESIGNED WRC, JAH
DRAWN KCS
CHECKED WRC

APPROVED _____ DATE _____
_____ DATE _____
GREELEY AND HANSEN, ENGINEERS

NO.	DATE	APPD	REVISION
2	8/15/96		RECORD DWG REVISIONS

SCALE
SCALE
1 0 1 2 3 4 5 6 7 FT
3/8"=1'-0"

CITY OF TAMPA, FLORIDA
HOOKERS POINT WASTEWATER TREATMENT PLANT
PLANT EXPANSION
PHASE I DIVISION 5H3B
STANDBY POWER AND SLUDGE STORAGE FACILITIES

STANDBY POWER FACILITY
STRUCTURAL
FRAME ELEVATION DETAILS

PROJ NO. 202G
DWG TS6
SHEET
DATE DECEMBER 1991 REV 2

5H3B_0TS-006

FILE: H3B-TS06 SCALE: 1:32 09/06, 1996 at 11:54 – *13_cah (Hardware Lock)*

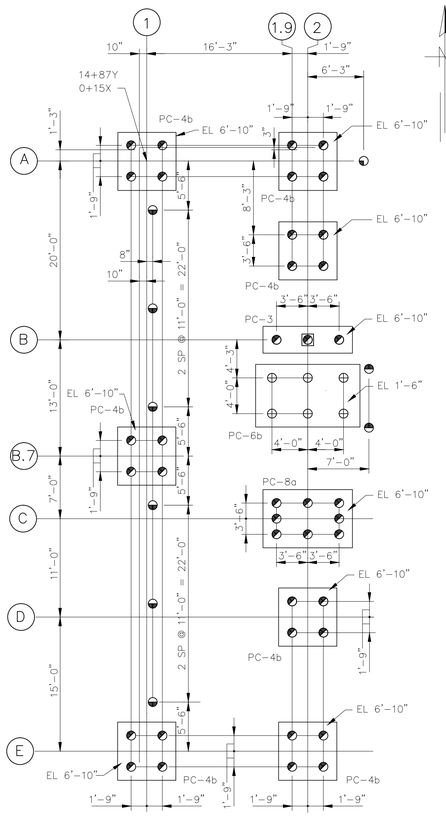

FOR REMAINDER OF PLAN, SEE DRAWING TS1

REVISED PILE PLAN

SCALE: 1/8"=1'-0"

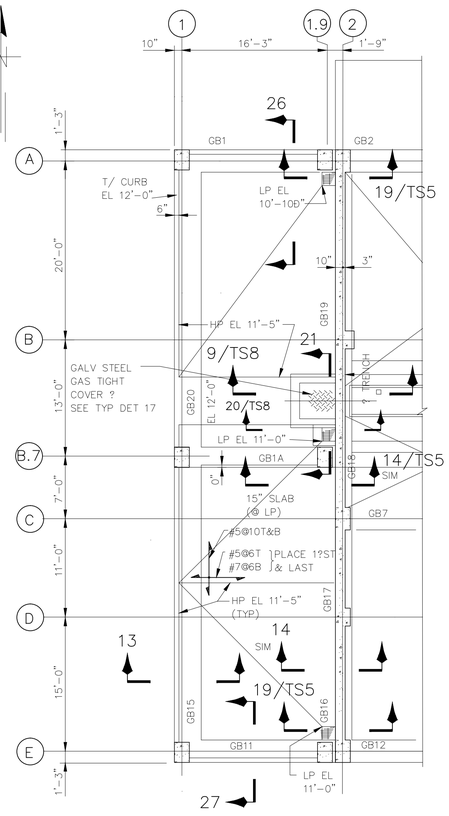

FOR REMAINDER OF PLAN, SEE DRAWING TS2

REVISED PLAN AT EL 12'-0"

SCALE: 1/8"=1'-0"

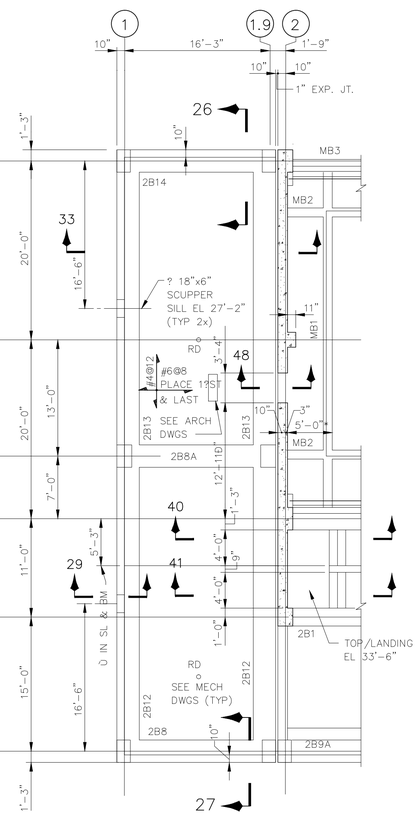

FOR REMAINDER OF PLAN, SEE DRAWING TS3

REVISED PLAN AT EL 35'-0"

SCALE: 1/8"=1'-0"

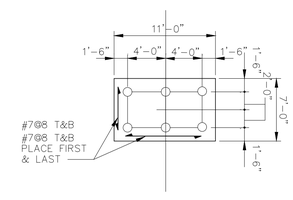

PC-6b
H=2'-8"

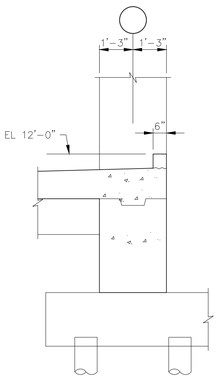

FOR REMAINDER OF SECTION, SEE DRAWING TS10

REVISED SECTION 26 (SHOWN)
REVISED SECTION 27 (OPP HAND)

SCALE: 1"=1'-0"

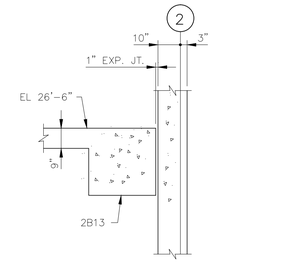

FOR REMAINDER OF SECTION, SEE DRAWING TS4

REVISED SECTION 33

SCALE: 1"=1'-0"

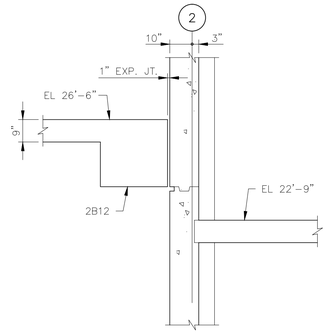

FOR REMAINDER OF SECTION, SEE DRAWING TS9

REVISED SECTION 40
REVISED SECTION 41

SCALE: 1"=1'-0"

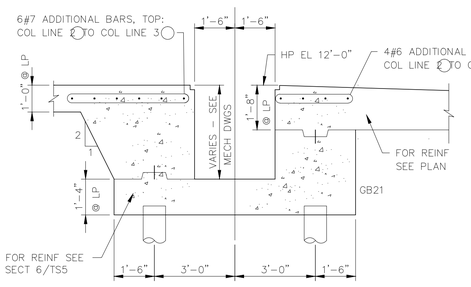

REPLACES SECTION ON DRAWING TS2

REVISED SECTION 4

SCALE: 1"=1'-0"

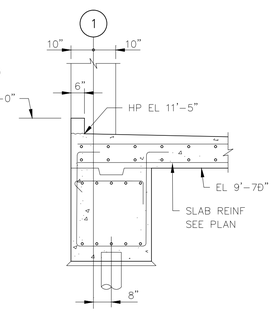

REPLACES SECTION ON DRAWING TS5

REVISED SECTION 13

SCALE: 1"=1'-0"

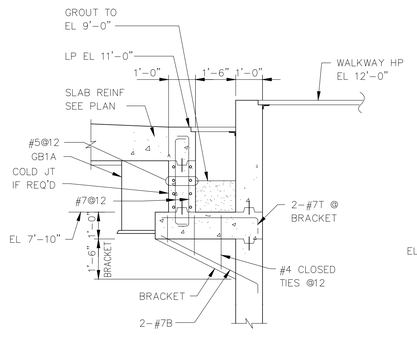

FOR REMAINDER OF SECTION, SEE DRAWING TS8

REVISED SECTION 21

SCALE: 1"=1'-0"

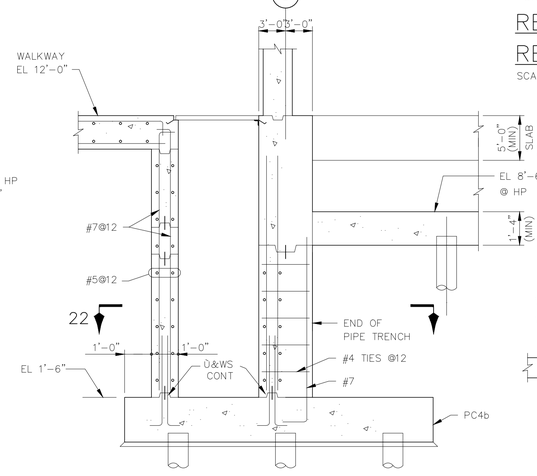

REPLACES SECTION ON DRAWING TS8

REVISED SECTION 9

SCALE: 1"=1'-0"

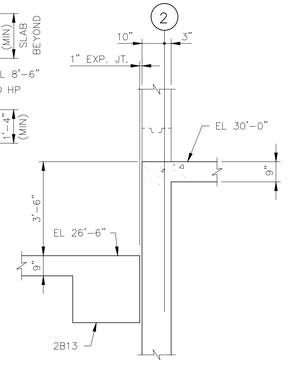

FOR REMAINDER OF SECTION, SEE DRAWING TS11

REVISED SECTION 48

SCALE: 1"=1'-0"

REVISES DRAWING NO. TS1-TS11

KLEIN AND HOFFMAN, INC.
CONSULTING ENGINEERS
4350 W. CYPRESS STREET
TAMPA, FLORIDA 33607 - 4135
PROJECT NO. 4187

GREELEY AND HANSEN
ENGINEERS
4350 WEST CYPRESS STREET
TAMPA, FLORIDA 33607-4135

DESIGNED JVT
DRAWN SKC
CHECKED SKC

APPROVED _____ DATE _____
_____ DATE _____
GREELEY AND HANSEN, ENGINEERS

NO.	DATE	APPD	REVISION

SCALE
8 0 8 16 FT 1/8"=1'-0"
1 0 1 2 3 4 5 6 7 FT 3/8"=1'-0"

CITY OF TAMPA, FLORIDA
HOOKERS POINT WASTEWATER TREATMENT PLANT
PLANT EXPANSION
PHASE I DIVISION 5H3B
STANDBY POWER AND SLUDGE STORAGE FACILITIES

STANDBY POWER FACILITY
STRUCTURAL
REVISED PLANS, SECTIONS AND SCHEDULES

PROJ NO. 202G
DWG SD-2
SHEET
DATE MAY 1993 REV 0

5H3B_0TS-006A

FILE: H3B0002 SCALE: 1:96 05/10, 1993 at 09:18 491.2"

REVISED BEAM SCHEDULE

FOR REMAINDER OF BEAM SCHEDULE, SEE DRAWINGS TS7 & TS8

AREA	MARK	SIZE W X D	BOTT BARS	TOP BARS A	TOP BARS B	TOP BARS C	W OR S SUPPORT / E OR N SUPPORT	STIRRUPS SIZE	STIRRUPS SPA EA END	STIRRUPS TYPE	REMARKS
	GB1	30x52	6-#7	6-#7 A1		6-#7 C1		#4	@12 THROUGHOUT	S2	BEAM DEPTH TAKEN FROM EL 11'-5"
	GB11	30x52	6-#7	4-#7 A1		4-#7 C1		#4	@12	S2	BEAM DEPTH TAKEN FROM EL 11'-5"
	GB15	36x55	7-#7	5-#7 A1		5-#7 C1	COL B.7,1	#4	@6	S2	BEAM DEPTH TAKEN FROM LP EL 11'-5". SEE SEC 13/TS5
	GB16	24x62	6-#8*	6-#8 A1		6-#8 C1		#4	@6	S4	SEE DWG TS8 FOR GRADE BM SECTION
	GB17	24x62	6-#8*			6-#8 C1		#4	@6	S4	SEE DWG TS8 FOR GRADE BM SECTION
	GB18	24x62	6-#9*			6-#8 C1		#4	@6	S4	SEE DWG TS8 FOR GRADE BM SECTION
	GB19	24x62	6-#8*	6-#8 A1				#4	@6	S4	SEE DWG TS8 FOR GRADE BM SECTION
	GB20	36x55	7-#7	5-#7 A1				#4	@6	S2	BEAM DEPTH TAKEN FROM LP EL 11'-5". SEE SECT 13/TS5
	GB1A	24x52	6-#7	12 # A1			2'-6" / 2'-6"	#4	@6	S4	BEAM DEPTH TAKEN FROM EL 11'-5" 1/2 A1 EACH END
	2B8A	30x24	4-#8	6-#9 A1				#4	@8	S6	1/2 A1 EACH END

* LAP SPLICE 3 NOS BOTTOM BARS AT SUPPORTS

TYPE S4

NOTE:
PLAN, SECTIONS, BEAM SCHEDULE, COLUMN SCHEDULE AND OTHER DETAILS SHOWN HERE, SUPERSEDE THE RELEVANT DETAILS ON DRAWINGS TS1 THRU TS11.

COL. SCHEDULE

FOR REMAINDER OF COLUMN SCHEDULE, SEE DRAWING TS9

COLUMN MARK	A1.9 A1 B.7-1.9 B.7-1 E1.9 E1
HIGH ROOF EL 39'-6"	
LOW ROOF EL 26'-6"	
GROUND FLOOR HP EL 12'-0"	3-#9 / 20x30 8-#9T4
T/PILE CAP EL VARIES	

T4

REVISED PILE SCHEDULE

ITEM	MARK	NO. OF PILES	UPLIFT PILES	CUT-OFF ELEV.	REMARKS
		4	0	10'-8"	
		6	0	7'-2"	
		31	0	7'-3" (1)	
		17	0	8'-10	GENERATOR BASES (INCL. FUTURE BASE)
		8	0	7'-6	GENERATOR BASES
		6	0	-0'-10"	
		21	0	10'-4"	
		3	0	7'-8"	
		24	0	(-) 3'-4"	
		24	0	5'-0"	
		93	0	4'-6"	
		10	0	4'-0"	
		23	0	6'-11"	

TOTAL NUMBER OF PILES THIS SCHEDULE = 270

FILE: H:\VCSH\5H3\DWG\5H3003 SCALE: 1:1 PLOT: MAY 14, 1993 at 14:28 PRT1 =2=

KLEIN AND HOFFMAN, INC.
CONSULTING ENGINEERS
4350 W. CYPRESS STREET
TAMPA, FLORIDA 33607 - 4135
PROJECT NO. 4187

GREELEY AND HANSEN
ENGINEERS
4350 WEST CYPRESS STREET
TAMPA, FLORIDA 33607-4135

DESIGNED JVT
DRAWN SKC
CHECKED SKC

APPROVED _____ DATE _____
_____ DATE _____
GREELEY AND HANSEN, ENGINEERS

NO.	DATE	APPD	REVISION
1	6/4/93	SKC	PILE SCHED. CUT-OFF ELEV.

SCALE
8 0 8 16 FT 1/8"=1'-0"
1 0 1 2 3 4 5 6 7 FT 3/8"=1'-0"

CITY OF TAMPA, FLORIDA
HOOKERS POINT WASTEWATER TREATMENT PLANT
PLANT EXPANSION
PHASE I DIVISION 5H3B
STANDBY POWER AND SLUDGE STORAGE FACILITIES

STANDBY POWER FACILITY
STRUCTURAL
REVISED PLANS, SECTIONS AND SCHEDULES

PROJ NO. 202G
DWG SD-3
SHEET
DATE MAY 1993 REV 1

REVISES DRAWING NO. TS1-TS11

5H3B_0TS-006B

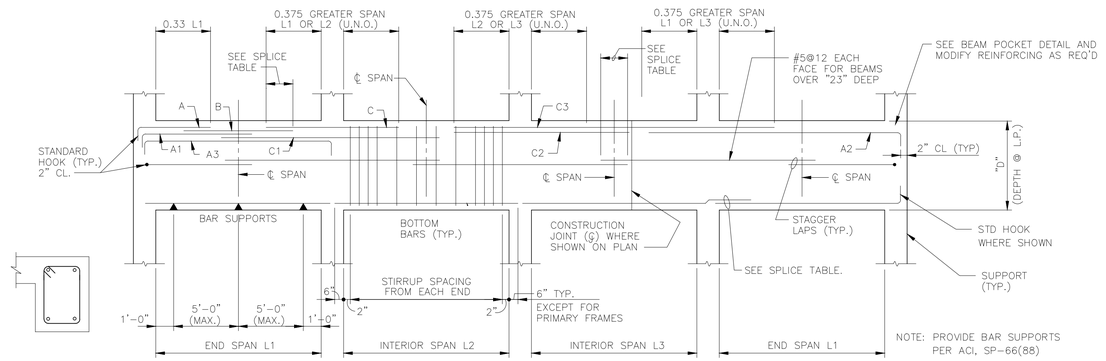

TYPE S7

BEAM BAR PLACING DIAGRAM

(TYPICAL UNLESS OTHERWISE SHOWN OR NOTED)

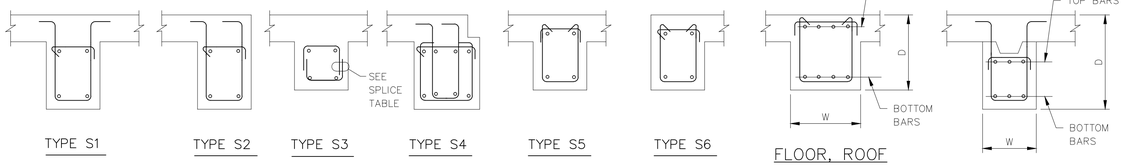

TYPE S1 TYPE S2 TYPE S3 TYPE S4 TYPE S5 TYPE S6

STIRRUP DETAILS

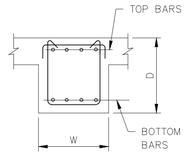

FLOOR, ROOF &MEZZ BEAMS

GRADE BEAM DETAIL

BEAM SCHEDULE

AREA	MARK	SIZE W X D	BOTT BARS	TOP BARS A	TOP BARS B	TOP BARS C	W OR S SUPPORT	E OR N SUPPORT	STIRRUPS SIZE	STIRRUPS SPA EA END	STIRRUPS TYPE	REMARKS
GRADE BEAMS	GB1	30x52	6-#7	6-#7 A1		6-#7 C1			#4	@12 THROUGHOUT	S2	BEAM DEPTH TAKEN FROM EL 11'-5"
	GB2	36x56	4-#8			4-#8 C1		COL A3	#4	@12	S2	
	GB3	36x56	4-#8			4-#8 C1	COL A3		#4	@12	S2	
	GB4	30x56	4-#8			6-#8 C1			#4	@12	S2	
	GB5	30x56	4-#8	4-#8 A1		6-#8 C1		*9'-3"	#4	@12	S2	* EXTEND PAST GB6 FOR FUTURE CONSTRUCTION
	GB6	30x56	*	*					#4	@12	S2	* EXTEND REINF FROM GB5
	GB7	30x36	8-#7	5-#7 A1		5-#7 C1			#4	@10	S1	
	GB8	30x62	8-#7			5-#7 C1			#4	@10	S1	
	GB9	30x62	8-#7	5-#7 A1		5-#7		*9'-3"	#4	@10	S1	* EXTEND PAST GB10 FOR FUTURE CONSTRUCTION
	GB10	30x62	*	*					#4	@10	S1	* EXTEND REINF FROM GB9
	GB11	30x52	6-#7	4-#7 A1		4-#7 C1			#4	@12	S2	BEAM DEPTH TAKEN FROM EL 11'-5"
	GB12	30x33	6-#7			4-#7 C1			#4	@12	S2	
	GB13	30x33	6-#7			4-#7		*9'-3"	#4	@12	S2	* EXTEND PAST GB14 FOR FUTURE CONSTRUCTION
	GB14	30x33	*	*					#4	@12	S2	* EXTEND REINF FROM GB13
	GB15	36x55	7-#7	5-#7 A1		5-#7 C1		COL B.7,1	#4	@6	S2	BEAM DEPTH TAKEN FROM LP EL 11'-5". SEE SEC 13/TS5
	GB16	24x62	6-#8*	6-#8 A1		6-#8 C1			#4	@6	S4	SEE DWG TS8 FOR GRADE BM SECTION

NOTE: FOR ADD'L BEAM DETAILS SEE SHT TS8

BEAM SCHEDULE

AREA	MARK	SIZE W X D	BOTT BARS	TOP BARS A	TOP BARS B	TOP BARS C	W OR S SUPPORT	E OR N SUPPORT	STIRRUPS SIZE	STIRRUPS SPA EA END	STIRRUPS TYPE	REMARKS
GRADE BEAMS	GB17	24x62	6-#8*			6-#8 C1			#4	@6	S4	SEE DWG TS8 FOR GRADE BM SECTION
	GB18	24x62	6-#9*			6-#8 C1			#4	@6	S4	SEE DWG TS8 FOR GRADE BM SECTION
	GB19	24x62	6-#8*	6-#8 A1					#4	@6	S4	SEE DWG TS8 FOR GRADE BM SECTION
	GB20	36x55	7-#7	5-#7 A1					#4	@6	S2	BEAM DEPTH TAKEN FROM LP EL 11'-5". SEE SECT 13/TS5
	GB21	36x61	4-#8	4-#8 A1					#4	@12	S3	A1 BARS EACH END
	GB22	20x33	3-#7	4-#8 A1					#4	@10	S1	A1 BARS EACH END
	GB23	20x62	5-#7	5-#8 A1		5-#8 C1			#4	@12	S2	
	GB24	20x62	5-#7			5-#8 C1			#4	@12	S2	
	GB25	26x62	5-#7			5-#8 C1			#4	@12	S2	SEE SECT 28/TS11 FOR SPECIAL REINF CLEARANCE
	GB26	26x62	5-#7			6-#7 C1			#4	@12	S2	SEE SECT 28/TS11 FOR SPECIAL REINF CLEARANCE
	GB27	24x44	4-#7	2-#7A1					#4	@10	S2	A1 BARS EA END
	GB1A	24x52	6-#7	12-#A1			2'-6"	2'-6"	#4	@6	S4	BEAM DEPTH TAKEN FROM EL. 11'-5" ĐA1 EACH END
	GB8A	30x24	4-#8	6-#9A1					#4	@8	S6	ĐA1 EACH END
ROOF BEAMS	RB1	24x14	4-#9	2-#8 A1		4-#10 C1			#4	@5	S6	
	RB2	24x14	3-#8			2-#9 2-#4 C1			#4	@5	S6	
	RB3	24x14	3-#8			4-#10 C1			#4	@5	S6	
	RB4	24x14	4-#9			2-#8 C2		2'-6"	#4	@5	S6	
	RB5	30x15	5-#6	6-#7 A1		6-#7 C1			#4	12@5Đ R@12	S5	HOOK & LAP 2 OUTSIDE BOTT BARS
	RB6	30x15	5-#6			4-#7 2-#7 C1			#4	12@15Đ R@12	S5	LAP 2 OUTSIDE BOTT BARS
	RB7	30x15	5-#6	6-#7 A1				*	#4	12@15Đ R@12	S5	HOOK & LAP 2 OUTSIDE BOTT BARS * CONTINUE BARS THROUGH RB8
	RB8	30x15	*			*			#4	@5Đ	S5	* CONTINUE BARS FROM RB7
	RB9	30x36	5-#8	5-#8 A1		5-#8 C1			#4	@16	S6	HOOK & LAP 2 OUTSIDE BOTT BARS
	RB10	30x36	5-#8			3-#8 2-#8 C1			#4	@16	S6	LAP 2 OUTSIDE BOTT BARS
	RB11	30x36	5-#8	5-#8 A1				*	#4	@16	S6	HOOK & LAP 2 OUTSIDE BOTT BARS * CONTINUE BARS THROUGH RB12
	RB12	30x36	*			*			#4	@16	S6	* CONTINUE BARS FROM RB11
	RB13	12x14	2-#6			2-#7 C2 2-#7 C1	C1 2'-9"		#3	10@5 R@12	S6	
	RB14	15x14	2-#6	2-#7 A1		3-#6 C1			#3	10@5 R@12	S6	
	RB15	12x15	2-#8	2-#8 A1		2-#8 C2		2'-6"	#3	10@6 R@12	S6	
	RB16	24x36	5-#8	5-#8 A1		5-#8 C1			#4	@16	S6	HOOK & LAP 2 OUTSIDE BOTT BARS
	RB17	24x36	5-#8			3-#8 2-#8 C1			#4	@16	S6	LAP 2 OUTSIDE BOTT BARS
	RB18	24x36	5-#8	5-#8 A1				*	#4	@16	S6	HOOK & LAP 2 OUTSIDE BOTT BARS * CONTINUE BARS THROUGH RB19
	RB19	24x36	*			*		*	#4	@16	S6	* CONTINUE BARS FROM RB18
	RB20	20x42	4-#7			*			#4	@16	S5	* SEE ELEV FRAME "F1" SHT TS6
	RB21	20x42	2-#8 4-#8			*			#4	@12	S5	* SEE ELEV FRAME "F1" SHT TS6

LAP SPLICE 3 NOS BOTTOM BARS AT SUPPORTS

See Supplemental Drawing SD-2 and SD-3

RECORD DRAWING

THIS RECORD DRAWING IS NOT WARRANTED BUT IS BELIEVED TO REPRESENT CONDITIONS UPON COMPLETION OF CONSTRUCTION WITHIN REASONABLE TOLERANCES, BASED UPON THE INFORMATION FURNISHED TO THE ENGINEER PERTAINING TO CHANGES MADE DURING CONSTRUCTION.

KLEIN AND HOFFMAN, INC.
CONSULTING ENGINEERS
4350 W. CYPRESS STREET
TAMPA, FLORIDA 33607 - 4135
PROJECT NO. P4187

GREELEY AND HANSEN
ENGINEERS
1715 NORTH WESTSHORE BOULEVARD
TAMPA, FLORIDA 33607-4135

DESIGNED WRC, JAH
DRAWN KCS
CHECKED WRC

APPROVED _____ DATE _____
_____ DATE _____
GREELEY AND HANSEN, ENGINEERS

NO.	DATE	APPD	RECORD DWG REVISIONS REVISION
2	8/27/96		

SCALE
NO SCALE

CITY OF TAMPA, FLORIDA
HOOKERS POINT WASTEWATER TREATMENT PLANT
PLANT EXPANSION
PHASE I DIVISION 5H3B
STANDBY POWER AND SLUDGE STORAGE FACILITIES

STANDBY POWER FACILITY
STRUCTURAL
BEAM SCHEDULE

PROJ NO. 202G
DWG TS7
SHEET
DATE DECEMBER 1991 REV 2

5H3B_0TS-007

FILE: H3B-TS07 SCALE: 1:1 09/06, 1996 at 13:26 - *13.4h (Hardware Lock)*

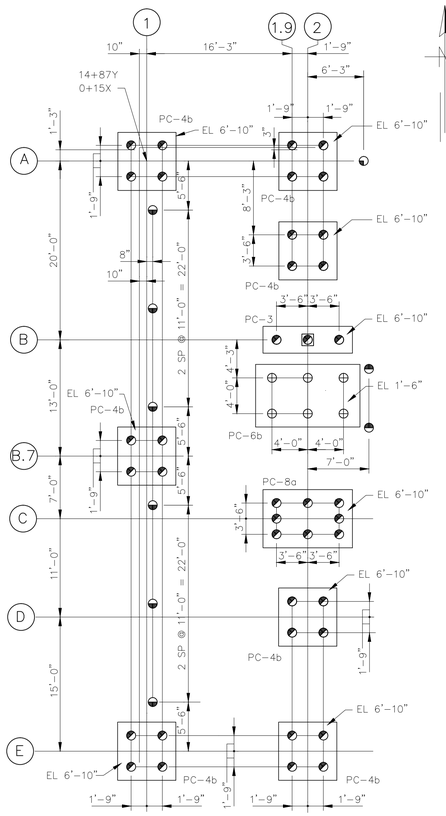

FOR REMAINDER OF PLAN, SEE DRAWING TS1

REVISED PILE PLAN

SCALE: 1"=1'-0"

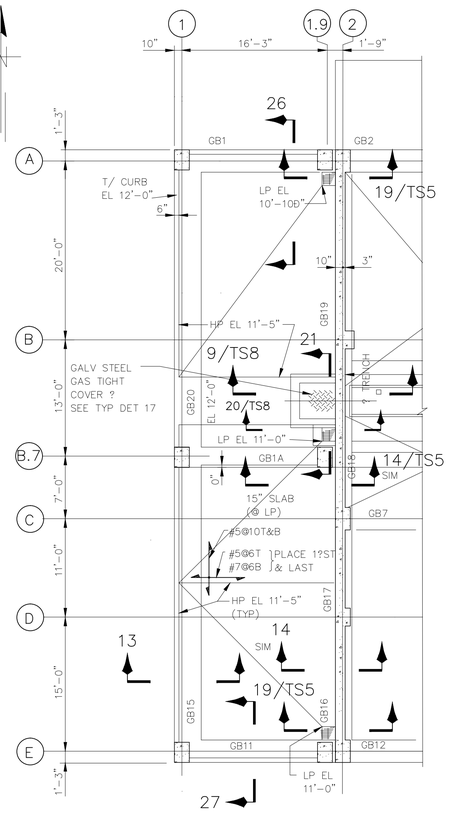

FOR REMAINDER OF PLAN, SEE DRAWING TS2

REVISED PLAN AT EL 12'-0"

SCALE: 1"=1'-0"

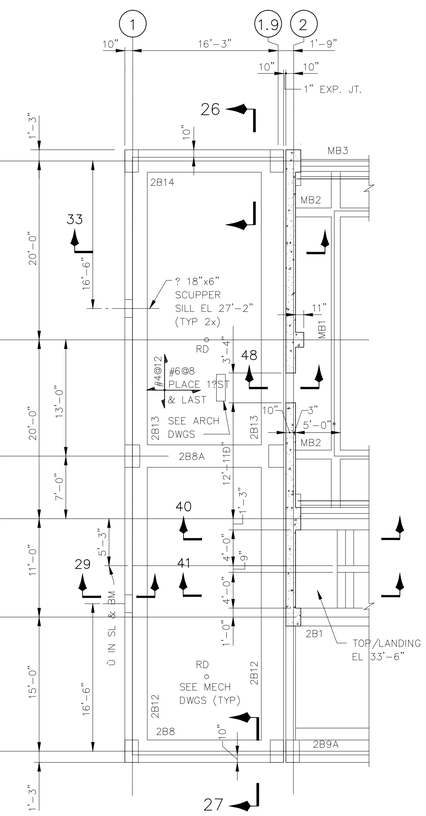

FOR REMAINDER OF PLAN, SEE DRAWING TS3

REVISED PLAN AT EL 35'-0"

SCALE: 1"=1'-0"

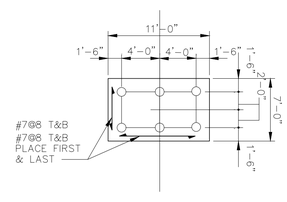

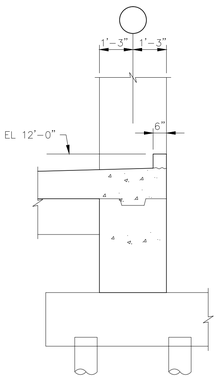

FOR REMAINDER OF SECTION, SEE DRAWING TS10

REVISED SECTION 26 (SHOWN)

REVISED SECTION 27 (OPP HAND)

SCALE: 1"=1'-0"

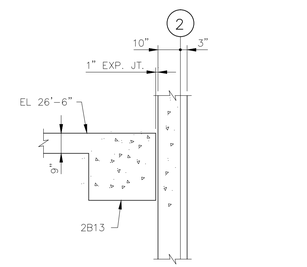

FOR REMAINDER OF SECTION, SEE DRAWING TS4

REVISED SECTION 33

SCALE: 1"=1'-0"

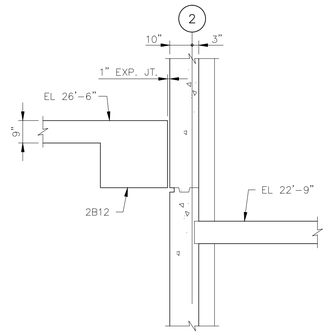

FOR REMAINDER OF SECTION, SEE DRAWING TS9

REVISED SECTION 40

REVISED SECTION 41

SCALE: 1"=1'-0"

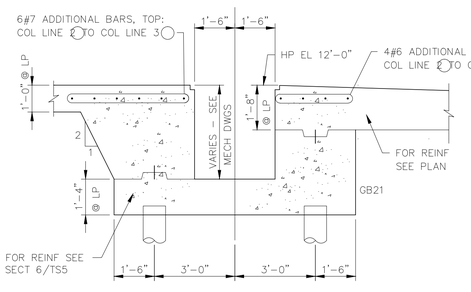

REPLACES SECTION ON DRAWING TS2

REVISED SECTION 4

SCALE: 1"=1'-0"

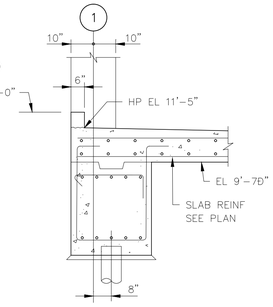

REPLACES SECTION ON DRAWING TS5

REVISED SECTION 13

SCALE: 1"=1'-0"

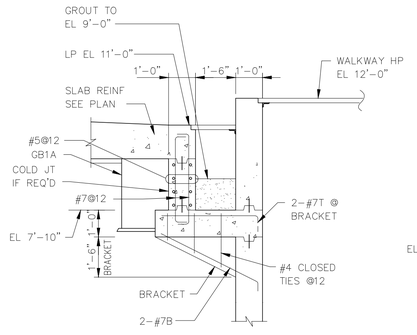

FOR REMAINDER OF SECTION, SEE DRAWING TS8

REVISED SECTION 21

SCALE: 1"=1'-0"

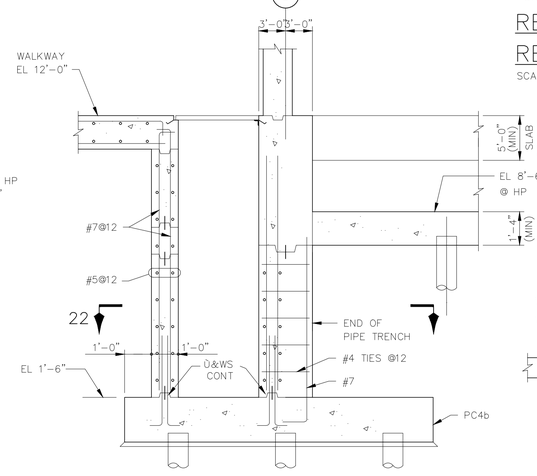

REPLACES SECTION ON DRAWING TS8

REVISED SECTION 9

SCALE: 1"=1'-0"

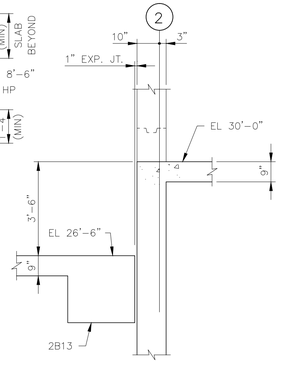

FOR REMAINDER OF SECTION, SEE DRAWING TS11

REVISED SECTION 48

SCALE: 1"=1'-0"

REVISES DRAWING NO. TS1-TS11

KLEIN AND HOFFMAN, INC. CONSULTING ENGINEERS 4350 W. CYPRESS STREET TAMPA, FLORIDA 33607 - 4135 PROJECT NO. 4187			
GREELEY AND HANSEN ENGINEERS 4350 WEST CYPRESS STREET TAMPA, FLORIDA 33607-4135	DESIGNED JVT DRAWN SKC CHECKED SKC	APPROVED _____ DATE _____ _____ DATE _____ GREELEY AND HANSEN, ENGINEERS	NO. / DATE / APPD / REVISION
SCALE 8 0 8 16 FT 1/8"=1'-0" 1 0 1 2 3 4 5 6 7 FT 3/8"=1'-0"	CITY OF TAMPA, FLORIDA HOOKERS POINT WASTEWATER TREATMENT PLANT PLANT EXPANSION PHASE I DIVISION 5H3B STANDBY POWER AND SLUDGE STORAGE FACILITIES	STANDBY POWER FACILITY STRUCTURAL REVISED PLANS, SECTIONS AND SCHEDULES	PROJ NO. 202G DWG SD-2 SHEET DATE MAY 1993 REV 0

FILE: H3B0002 SCALE: 1:96 05/10, 1993 at 09:18 491.2"

5H3B_0TS-007A

REVISED BEAM SCHEDULE

FOR REMAINDER OF BEAM SCHEDULE, SEE DRAWINGS TS7 & TS8

AREA	MARK	SIZE W X D	BOTT BARS	TOP BARS A	TOP BARS B	TOP BARS C	W OR S SUPPORT / E OR N SUPPORT	STIRRUPS SIZE	STIRRUPS SPA EA END	STIRRUPS TYPE	REMARKS
	GB1	30x52	6-#7	6-#7 A1		6-#7 C1		#4	@12 THROUGHOUT	S2	BEAM DEPTH TAKEN FROM EL 11'-5"
	GB11	30x52	6-#7	4-#7 A1		4-#7 C1		#4	@12	S2	BEAM DEPTH TAKEN FROM EL 11'-5"
	GB15	36x55	7-#7	5-#7 A1		5-#7 C1	COL B.7,1	#4	@6	S2	BEAM DEPTH TAKEN FROM LP EL 11'-5". SEE SEC 13/TS5
	GB16	24x62	6-#8*	6-#8 A1		6-#8 C1		#4	@6	S4	SEE DWG TS8 FOR GRADE BM SECTION
	GB17	24x62	6-#8*			6-#8 C1		#4	@6	S4	SEE DWG TS8 FOR GRADE BM SECTION
	GB18	24x62	6-#9*			6-#8 C1		#4	@6	S4	SEE DWG TS8 FOR GRADE BM SECTION
	GB19	24x62	6-#8*	6-#8 A1				#4	@6	S4	SEE DWG TS8 FOR GRADE BM SECTION
	GB20	36x55	7-#7	5-#7 A1				#4	@6	S2	BEAM DEPTH TAKEN FROM LP EL 11'-5". SEE SECT 13/TS5
	GB1A	24x52	6-#7	12 # A1			2'-6" / 2'-6"	#4	@6	S4	BEAM DEPTH TAKEN FROM EL 11'-5" 1/2 A1 EACH END
	2B8A	30x24	4-#8	6-#9 A1				#4	@8	S6	1/2 A1 EACH END

* LAP SPLICE 3 NOS BOTTOM BARS AT SUPPORTS

TYPE S4

NOTE:
PLAN, SECTIONS, BEAM SCHEDULE, COLUMN SCHEDULE AND OTHER DETAILS SHOWN HERE, SUPERSEDE THE RELEVANT DETAILS ON DRAWINGS TS1 THRU TS11.

COL. SCHEDULE

FOR REMAINDER OF COLUMN SCHEDULE, SEE DRAWING TS9

COLUMN MARK	A1.9 A1 B.7-1.9 B.7-1 E1.9 E1
HIGH ROOF EL 39'-6"	
LOW ROOF EL 26'-6"	
GROUND FLOOR HP EL 12'-0"	3-#9 / 20x30 8-#9T4
T/PILE CAP EL VARIES	

T4

REVISED PILE SCHEDULE

ITEM	MARK	NO. OF PILES	UPLIFT PILES	CUT-OFF ELEV.	REMARKS
		4	0	10'-8"	
		6	0	7'-2"	
		31	0	7'-3" (1)	
		17	0	8'-10	GENERATOR BASES (INCL. FUTURE BASE)
		8	0	7'-6	GENERATOR BASES
		6	0	-0'-10"	
		21	0	10'-4"	
		3	0	7'-8"	
		24	0	(-) 3'-4"	
		24	0	5'-0"	
		93	0	4'-6"	
		10	0	4'-0"	
		23	0	6'-11"	

TOTAL NUMBER OF PILES THIS SCHEDULE = 270

FILE: H:\VCSHJB\SDV\B5003 SCALE: 1:1 06/04, 1993 at 14:28 MST -12*

KLEIN AND HOFFMAN, INC.
CONSULTING ENGINEERS
4350 W. CYPRESS STREET
TAMPA, FLORIDA 33607 - 4135
PROJECT NO. 4187

GREELEY AND HANSEN
ENGINEERS
4350 WEST CYPRESS STREET
TAMPA, FLORIDA 33607-4135

DESIGNED JVT
DRAWN SKC
CHECKED SKC

APPROVED _____ DATE _____
_____ DATE _____
GREELEY AND HANSEN, ENGINEERS

NO.	DATE	APPD	REVISION
1	6/4/93	SKC	PILE SCHED. CUT-OFF ELEV.

SCALE
8 0 8 16 FT 1/8"=1'-0"
1 0 1 2 3 4 5 6 7 FT 3/8"=1'-0"

CITY OF TAMPA, FLORIDA
HOOKERS POINT WASTEWATER TREATMENT PLANT
PLANT EXPANSION
PHASE I DIVISION 5H3B
STANDBY POWER AND SLUDGE STORAGE FACILITIES

STANDBY POWER FACILITY
STRUCTURAL
REVISED PLANS, SECTIONS AND SCHEDULES

REVISES DRAWING NO. TS1-TS11

PROJ NO. 202G
DWG SD-3
SHEET
DATE MAY 1993 REV 1

5H3B_0TS-007B

BEAM SCHEDULE

AREA	MARK	SIZE W X D	BOTT BARS	TOP BARS A	TOP BARS B	TOP BARS C	W OR S SUPPORT	E OR N SUPPORT	STIRRUPS SIZE	STIRRUPS SPA EA END	STIRRUPS TYPE	REMARKS
SECOND FLOOR BEAMS	2B1	* 24x30	4-#7	4-#7 A1		4-#7 C1			#4	@12	S5	* T/BM SLOPED. SEE SEC 23/TS10 HOOK & LAP 2 OUTSIDE BOTT BARS
	2B2	* 24x30	4-#7			2-#7 2-#7 C1			#4	@12	S5	* T/BM SLOPED. SEE SEC 23/TS10 LAP 2 OUTSIDE BOTT BARS
	2B3	* 24x30	4-#7	4-#7 A1				* *	#4	@12	S5	* T/BM SLOPED. SEE SEC 23/TS10 HOOK & LAP 2 OUTSIDE BOTT BARS
	2B4	* 24x30	* *			* *		* *	#4	@12	S5	* T/BM SLOPED. SEE SEC 23/TS10 ** BARS FROM 2B4
	2B5	12x16D	2-#6	2-#6 A1		2-#6 C1			#4	@7	S6	
	2B6	12x16D	2-#6			2-#6 C1			#4	@7	S6	
	2B7	12x16D	2-#6	2-#6 A1					#4	@7	S6	
	2B8	30x30	4-#8	4-#8 A1		4-#7 C1			#4	@12	S6	HOOK & LAP 2 OUTSIDE BOTT BARS
	2B9A	*	4-#8			2-#8 2-#8 C1			#4	@12	S6	* SEE SECT 44/T*S11 LAP 2 OUTSIDE BOTT BARS
	2B9B	*	4-#8			2-#8 2-#8 C1			#4	@12	S6	* SEE SECT 42/T*S11 LAP 2 OUTSIDE BOTT BARS
	2B10	30x30	4-#8	4-#8 A1				*	#4	@12	S6	HOOK & LAP 2 OUTSIDE BOTT BARS
	2B11	30x30	*			*		*	#4	@12	S6	* BARS FROM 2B10
	2B12	30x30	4-#8	4-#8	2-#8	4-#9 4-#9			#5	@9	S7	HOOK & LAP 2 OUTSIDE BOTT BARS
	2B13	30x30	4-#8	4-#8	2-#8				#5	@9	S7	HOOK & LAP 2 OUTSIDE BOTT BARS
	2B14	30x30	4-#8	4-#8 A3					#4	@12	S6	HOOK 2 OUTSIDE BOTT BARS
	2B15	*										* NOT USED
	2B16	20x42	3-#7	3-#7 A2				3'-6"	#4	@12	S5	HOOK 2 OUTSIDE BOTT BARS
	2B17	20x36	3-#7	3-#7 A3					#4	@12	S6	HOOK BOTT BARS SEE SECT 40&41/TS9
MEZZANINE BEAMS	MB1	12x30	2-#10 2-#10	2-#5 A1 EA END					#4	@12	S6	
	MB2	12x18	2-#6	2-#6 A3					#3	@7	S6	
	MB3	*	2-#8	2-#8 A1		2-#8 C1			#4	@12	S7	* SEE SECTS 36 & 37 /TS11
	MB4	16x78	2-#8			2-#8 C1			#4	@12	S7	DISCONTINUE & HOOK BOTT BARS AT EXHAUST OPENING
	MB5	16x78	2-#8	2-#8 A1					#4	@12	S7	DISCONTINUE & HOOK BOTT BARS AT EXHAUST OPENING
	MB6	*	2-#8	2-#8 A3					#4	@12	S7	* SEE SECTS 34 & 35/TS4 A1 BARS EA END

NOTE: FOR ADD'L BEAM DETAILS SEE SHT TS7

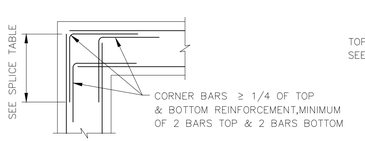

CORNER BAR DETAIL AT PERIMITER BEAMS

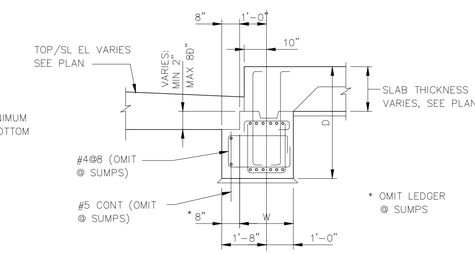

TYP FOR GRADE BEAMS GB16 – GB19

GRADE BEAM DETAIL

NO SCALE

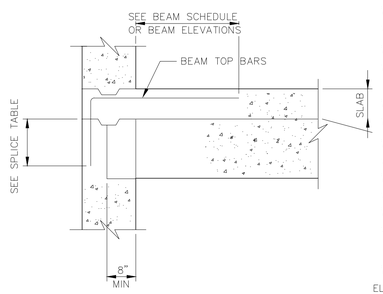

BEAM POCKET DETAIL

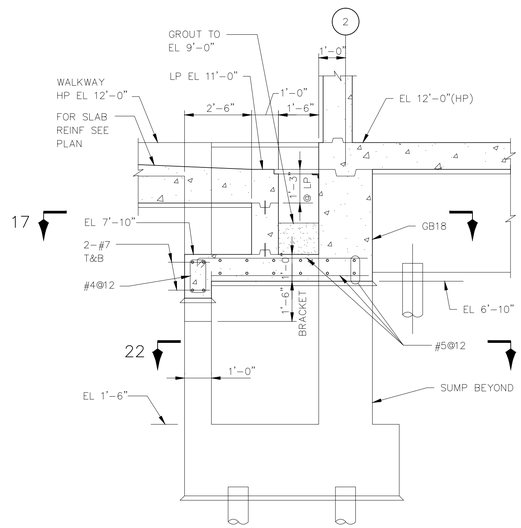

SECTION 20/TS2

SCALE: 1"=1'-0"

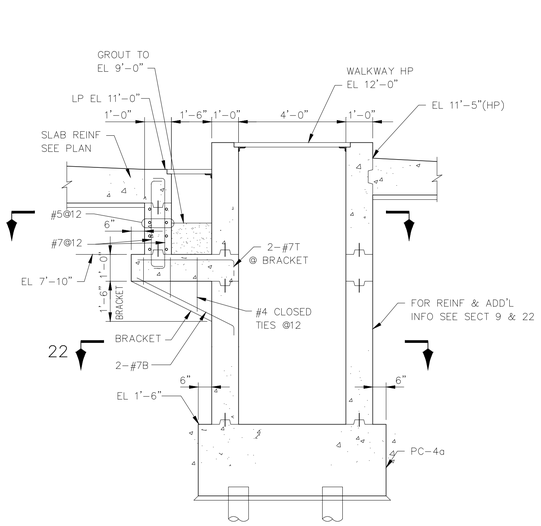

SECTION 21/TS2

SCALE: 1"=1'-0"

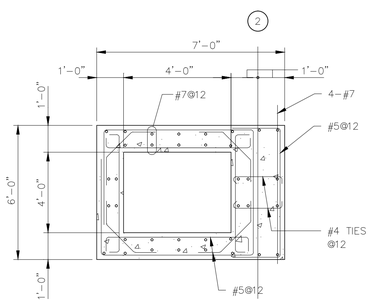

SECTION 22

SCALE: 1"=1'-0"

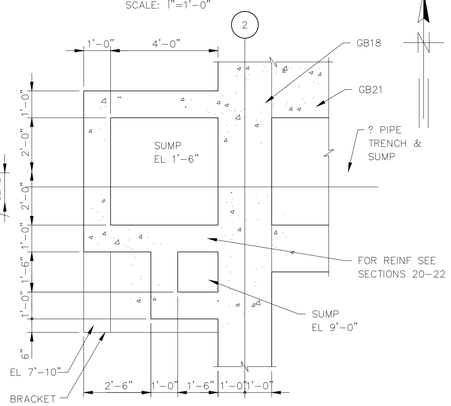

SECTION 17

SCALE: 1"=1'-0"

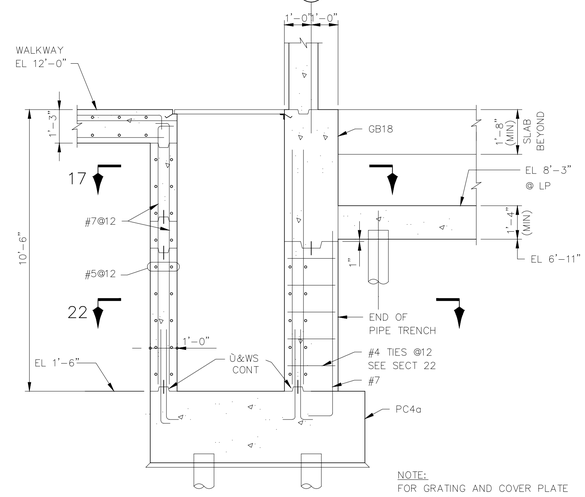

NOTE:
FOR GRATING AND COVER PLATE DETAILS, SEE DWG AS2

SECTION 9/TS2

SCALE: 1"=1'-0"

See Supplemental Drawing SD-2 and SD-3

RECORD DRAWING

THIS RECORD DRAWING IS NOT WARRANTED BUT IS BELIEVED TO REPRESENT CONDITIONS UPON COMPLETION OF CONSTRUCTION WITHIN REASONABLE TOLERANCES, BASED UPON THE INFORMATION FURNISHED TO THE ENGINEER PERTAINING TO CHANGES MADE DURING CONSTRUCTION.

KLEIN AND HOFFMAN, INC.
CONSULTING ENGINEERS
4350 W. CYPRESS STREET
TAMPA, FLORIDA 33607 – 4135
PROJECT NO. 4187

GREELEY AND HANSEN
ENGINEERS
1715 NORTH WESTSHORE BOULEVARD
TAMPA, FLORIDA 33607-4135

DESIGNED WRC, JAH
DRAWN KCS
CHECKED WRC

APPROVED _____ DATE _____
_____ DATE _____
GREELEY AND HANSEN, ENGINEERS

NO.	DATE	APPD	REVISION
3	8/2/96		RECORD DWG REVISIONS

SCALE
1 0 1 2 3 4 5 6 7 FT
3/8"=1'-0"

CITY OF TAMPA, FLORIDA
HOOKERS POINT WASTEWATER TREATMENT PLANT
PLANT EXPANSION
PHASE I DIVISION 5H3B
STANDBY POWER AND SLUDGE STORAGE FACILITIES

STANDBY POWER FACILITY
STRUCTURAL
SECTIONS AND PART BEAM SCHEDULE

PROJ NO. 202G
DWG TS8
SHEET
DATE DECEMBER 1991 REV 3

5H3B_0TS-008

FILE: H3B-TS08 SCALE: 1:32 09/06, 1996 at 14:03 - *13_c4h (Hardware Lock)*

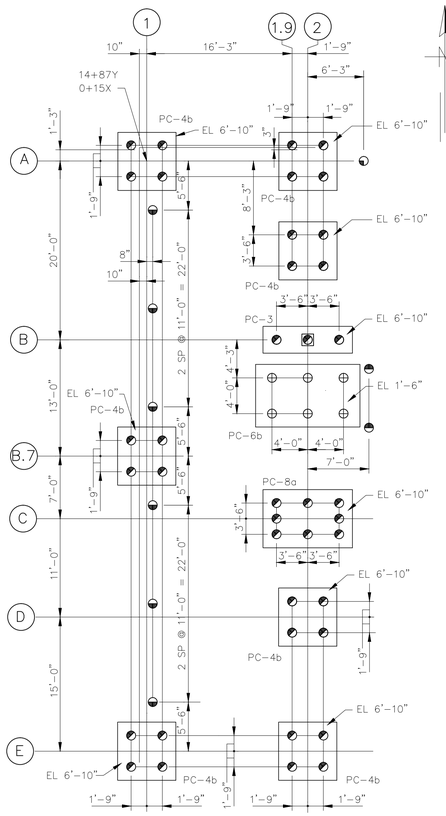

FOR REMAINDER OF PLAN, SEE DRAWING TS1

REVISED PILE PLAN

SCALE: 1/8"=1'-0"

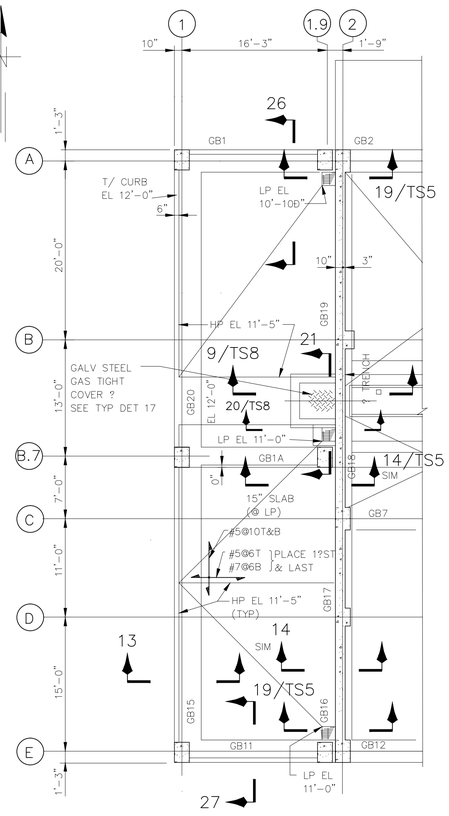

FOR REMAINDER OF PLAN, SEE DRAWING TS2

REVISED PLAN AT EL 12'-0"

SCALE: 1/8"=1'-0"

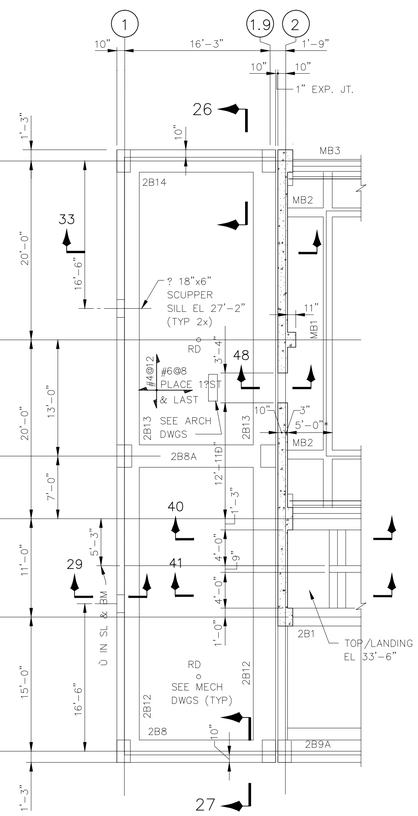

FOR REMAINDER OF PLAN, SEE DRAWING TS3

REVISED PLAN AT EL 35'-0"

SCALE: 1/8"=1'-0"

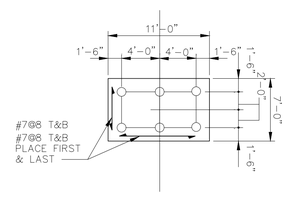

PC-6b
H=2'-8"

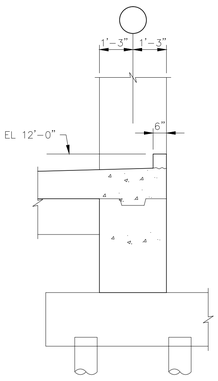

FOR REMAINDER OF SECTION, SEE DRAWING TS10

REVISED SECTION 26 (SHOWN)
REVISED SECTION 27 (OPP HAND)

SCALE: 1"=1'-0"

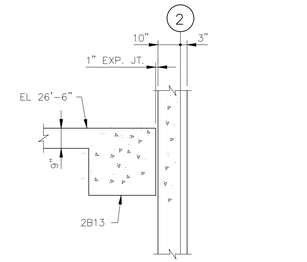

FOR REMAINDER OF SECTION, SEE DRAWING TS4

REVISED SECTION 33

SCALE: 1"=1'-0"

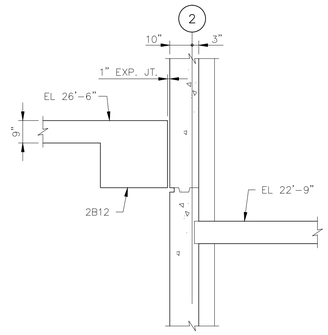

FOR REMAINDER OF SECTION, SEE DRAWING TS9

REVISED SECTION 40
REVISED SECTION 41

SCALE: 1"=1'-0"

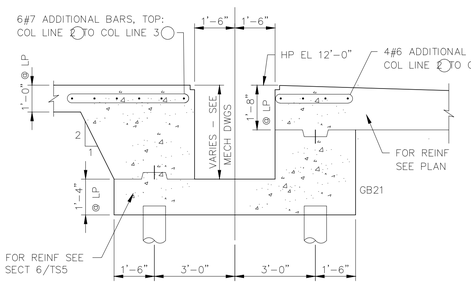

REPLACES SECTION ON DRAWING TS2

REVISED SECTION 4

SCALE: 1"=1'-0"

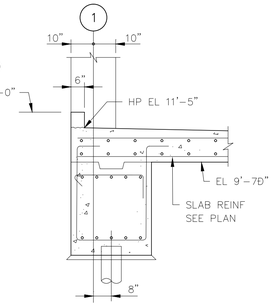

REPLACES SECTION ON DRAWING TS5

REVISED SECTION 13

SCALE: 1"=1'-0"

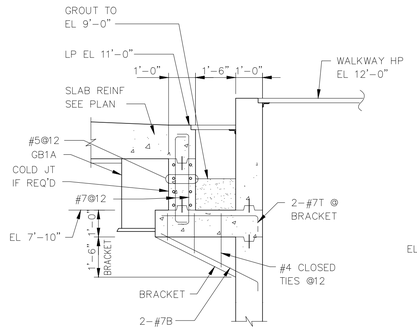

FOR REMAINDER OF SECTION, SEE DRAWING TS8

REVISED SECTION 21

SCALE: 1"=1'-0"

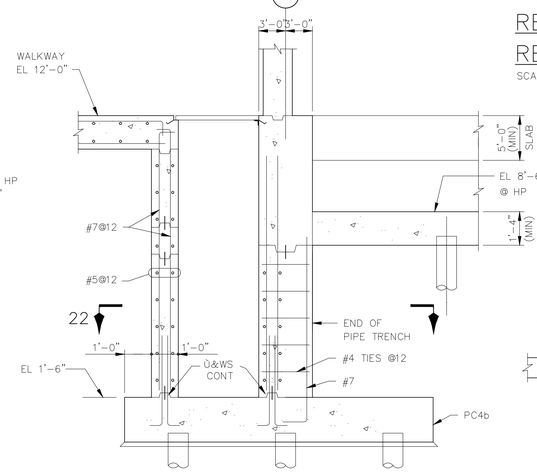

REPLACES SECTION ON DRAWING TS8

REVISED SECTION 9

SCALE: 1"=1'-0"

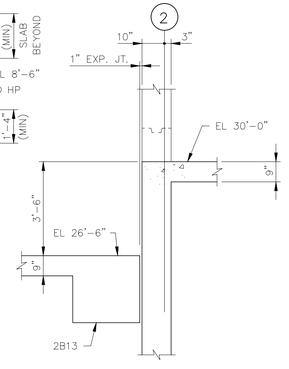

FOR REMAINDER OF SECTION, SEE DRAWING TS11

REVISED SECTION 48

SCALE: 1"=1'-0"

REVISES DRAWING NO. TS1-TS11

KLEIN AND HOFFMAN, INC.
CONSULTING ENGINEERS
4350 W. CYPRESS STREET
TAMPA, FLORIDA 33607 - 4135
PROJECT NO. 4187

GREELEY AND HANSEN
ENGINEERS
4350 WEST CYPRESS STREET
TAMPA, FLORIDA 33607-4135

DESIGNED JVT
DRAWN SKC
CHECKED SKC

APPROVED _____ DATE _____
_____ DATE _____
GREELEY AND HANSEN, ENGINEERS

NO.	DATE	APPD	REVISION

SCALE
8 0 8 16 FT 1/8"=1'-0"
1 0 1 2 3 4 5 6 7 FT 3/8"=1'-0"

CITY OF TAMPA, FLORIDA
HOOKERS POINT WASTEWATER TREATMENT PLANT
PLANT EXPANSION
PHASE I DIVISION 5H3B
STANDBY POWER AND SLUDGE STORAGE FACILITIES

STANDBY POWER FACILITY
STRUCTURAL
REVISED PLANS, SECTIONS AND SCHEDULES

PROJ NO. 202G
DWG SD-2
SHEET
DATE MAY 1993 REV 0

5H3B_0TS-008A

FILE: H3B0002 SCALE: 1:96 05/10, 1993 at 09:18 MST1.2P

REVISED BEAM SCHEDULE

FOR REMAINDER OF BEAM SCHEDULE, SEE DRAWINGS TS7 & TS8

AREA	MARK	SIZE W X D	BOTT BARS	TOP BARS A	TOP BARS B	TOP BARS C	W OR S SUPPORT / E OR N SUPPORT	STIRRUPS SIZE	STIRRUPS SPA EA END	STIRRUPS TYPE	REMARKS
	GB1	30x52	6-#7	6-#7 A1		6-#7 C1		#4	@12 THROUGHOUT	S2	BEAM DEPTH TAKEN FROM EL 11'-5"
	GB11	30x52	6-#7	4-#7 A1		4-#7 C1		#4	@12	S2	BEAM DEPTH TAKEN FROM EL 11'-5"
	GB15	36x55	7-#7	5-#7 A1		5-#7 C1	COL B.7,1	#4	@6	S2	BEAM DEPTH TAKEN FROM LP EL 11'-5". SEE SEC 13/TS5
	GB16	24x62	6-#8*	6-#8 A1		6-#8 C1		#4	@6	S4	SEE DWG TS8 FOR GRADE BM SECTION
	GB17	24x62	6-#8*			6-#8 C1		#4	@6	S4	SEE DWG TS8 FOR GRADE BM SECTION
	GB18	24x62	6-#9*			6-#8 C1		#4	@6	S4	SEE DWG TS8 FOR GRADE BM SECTION
	GB19	24x62	6-#8*	6-#8 A1				#4	@6	S4	SEE DWG TS8 FOR GRADE BM SECTION
	GB20	36x55	7-#7	5-#7 A1				#4	@6	S2	BEAM DEPTH TAKEN FROM LP EL 11'-5". SEE SECT 13/TS5
	GB1A	24x52	6-#7	12 # A1			2'-6" / 2'-6"	#4	@6	S4	BEAM DEPTH TAKEN FROM EL 11'-5" 1/2 A1 EACH END
	2B8A	30x24	4-#8	6-#9 A1				#4	@8	S6	1/2 A1 EACH END

* LAP SPLICE 3 NOS BOTTOM BARS AT SUPPORTS

TYPE S4

NOTE:
PLAN, SECTIONS, BEAM SCHEDULE, COLUMN SCHEDULE AND OTHER DETAILS SHOWN HERE, SUPERSEDE THE RELEVANT DETAILS ON DRAWINGS TS1 THRU TS11.

COL. SCHEDULE

FOR REMAINDER OF COLUMN SCHEDULE, SEE DRAWING TS9

COLUMN MARK	A1.9 A1 B.7-1.9 B.7-1 E1.9 E1
HIGH ROOF EL 39'-6"	
LOW ROOF EL 26'-6"	
GROUND FLOOR HP EL 12'-0"	3-#9 / 20x30 8-#9T4
T/PILE CAP EL VARIES	

T4

REVISED PILE SCHEDULE

ITEM	MARK	NO. OF PILES	UPLIFT PILES	CUT-OFF ELEV.	REMARKS
		4	0	10'-8"	
		6	0	7'-2"	
		31	0	7'-3" (1)	
		17	0	8'-10	GENERATOR BASES (INCL. FUTURE BASE)
		8	0	7'-6	GENERATOR BASES
		6	0	-0'-10"	
		21	0	10'-4"	
		3	0	7'-8"	
		24	0	(-) 3'-4"	
		24	0	5'-0"	
		93	0	4'-6"	
		10	0	4'-0"	
		23	0	6'-11"	

TOTAL NUMBER OF PILES THIS SCHEDULE = 270

FILE: H:\VCSHJB\SDV\B5003 SCALE: 1:1 PLOT: MAY 1993 at 14:28 PRT: LP

KLEIN AND HOFFMAN, INC.
CONSULTING ENGINEERS
4350 W. CYPRESS STREET
TAMPA, FLORIDA 33607 - 4135
PROJECT NO. 4187

GREELEY AND HANSEN
ENGINEERS
4350 WEST CYPRESS STREET
TAMPA, FLORIDA 33607-4135

DESIGNED JVT
DRAWN SKC
CHECKED SKC

APPROVED _____ DATE _____
_____ DATE _____
GREELEY AND HANSEN, ENGINEERS

NO.	DATE	APPD	REVISION
1	6/4/93	SKC	PILE SCHED. CUT-OFF ELEV.

SCALE
8 0 8 16 FT 1/8"=1'-0"
1 0 1 2 3 4 5 6 7 FT 3/8"=1'-0"

CITY OF TAMPA, FLORIDA
HOOKERS POINT WASTEWATER TREATMENT PLANT
PLANT EXPANSION
PHASE I DIVISION 5H3B
STANDBY POWER AND SLUDGE STORAGE FACILITIES

STANDBY POWER FACILITY
STRUCTURAL
REVISED PLANS, SECTIONS AND SCHEDULES

REVISES DRAWING NO. TS1-TS11

PROJ NO. 202G
DWG SD-3
SHEET
DATE MAY 1993 REV 1

5H3B_0TS-008B

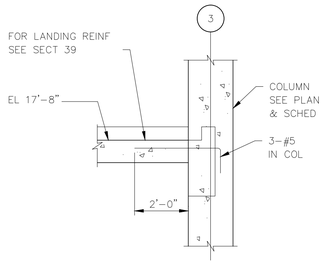

SECTION 38/TS3

SCALE: 1"=1'-0"

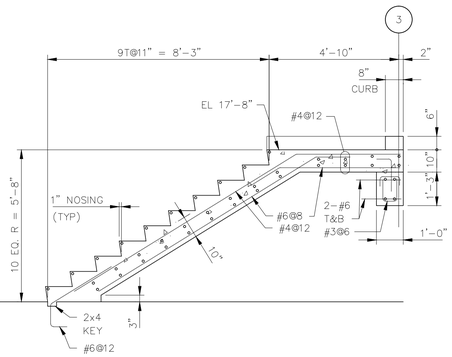

SECTION 33/TS3

SCALE: 1"=1'-0"

FLOOR SLAB AT EL 12'-0" & GRADE BMS NOT SHOWN

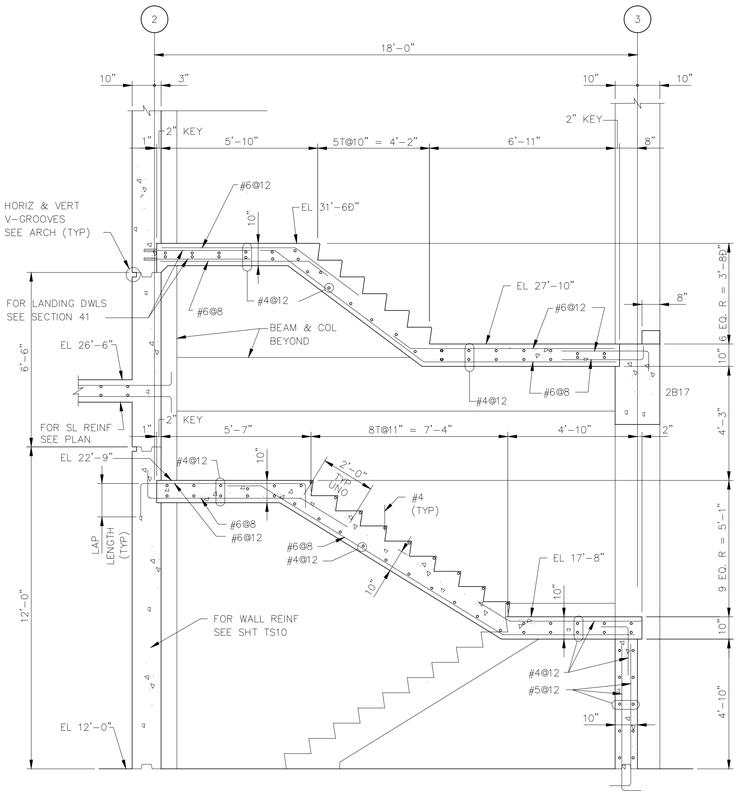

SECTION 40/TS3

SCALE: 1"=1'-0"

FLOOR SLAB AT EL 12'-0" & GRADE BMS NOT SHOWN

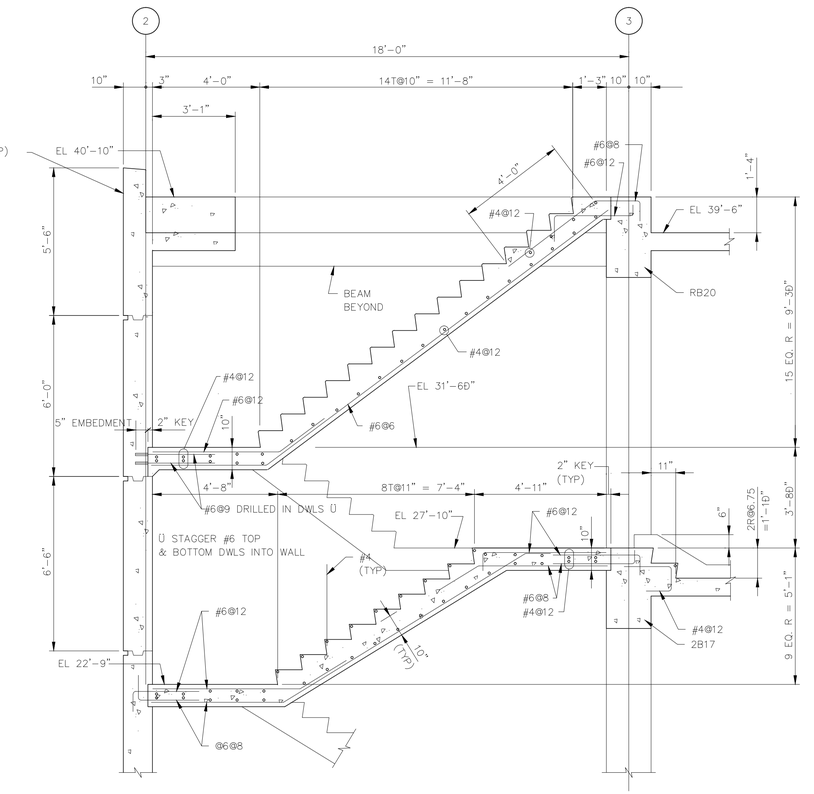

SECTION 41/TS3, 4

SCALE: 1"=1'-0"

COLUMN SCHEDULE

COLUMN MARK	A1.9 A1 B.7-1.9 B.7-1 E1.9 E1	A2, A3 A8, C2, C3, C8	B2, B8 D2, D8	D3	E3	A1, B.7.1, E1, E2, E8
HIGH ROOF EL 39'-6"						
LOW ROOF EL 26'-6"		Ù	NO HK ON LINE B	10" Ù		
EL 24'-0"	3-#9					
GROUND FLOOR HP EL 12'-0"	20x30 8-#9T4	20x30 8-#9T1	20x24 6-#9T2	20x24 6-#9T2	20x30 8-#11T3	20x30 6-#9T2
T/PILE CAP EL VARIES						

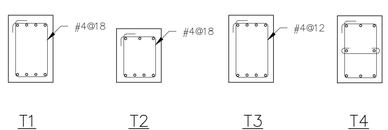

COLUMN TIES

NOTE: REFER TO FRAME F1 ELEVATION SHT TS6 FOR COLUMNS NOT INCLUDED

RECORD DRAWING

THIS RECORD DRAWING IS NOT WARRANTED BUT IS BELIEVED TO REPRESENT CONDITIONS UPON COMPLETION OF CONSTRUCTION WITHIN REASONABLE TOLERANCES, BASED UPON THE INFORMATION FURNISHED TO THE ENGINEER PERTAINING TO CHANGES MADE DURING CONSTRUCTION.

See Supplemental Drawing SD-2 and SD-3

NO.	DATE	APPD	REVISION
1	8/7/96		RECORD DWG REVISIONS

SCALE 1 0 1 2 3 4 5 6 7 FT 3/8"=1'-0"

KLEIN AND HOFFMAN, INC.
CONSULTING ENGINEERS
4350 W. CYPRESS STREET
TAMPA, FLORIDA 33607 – 4135
PROJECT NO. 4187

GREELEY AND HANSEN
ENGINEERS
1715 NORTH WESTSHORE BOULEVARD
TAMPA, FLORIDA 33607-4135

DESIGNED WRC, JAH
DRAWN KCS
CHECKED WRC

APPROVED _____ DATE _____
_____ DATE _____
GREELEY AND HANSEN, ENGINEERS

CITY OF TAMPA, FLORIDA
HOOKERS POINT WASTEWATER TREATMENT PLANT
PLANT EXPANSION
PHASE I DIVISION 5H3B
STANDBY POWER AND SLUDGE STORAGE FACILITIES

STANDBY POWER FACILITY
STRUCTURAL
SECTIONS AND COLUMN SCHEDULE

PROJ NO. 202G
DWG TS9
SHEET
DATE DECEMBER 1991 REV 1

5H3B_0TS-009

FILE: H3B-TS09 SCALE: 1:1 09/09, 1996 at 08:31 — *13_c4h (Hardware Lock)*

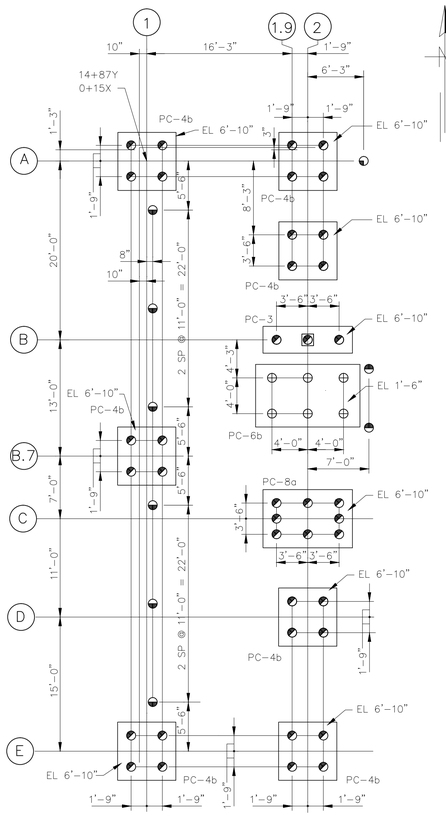

FOR REMAINDER OF PLAN, SEE DRAWING TS1

REVISED PILE PLAN

SCALE: 1"=1'-0"

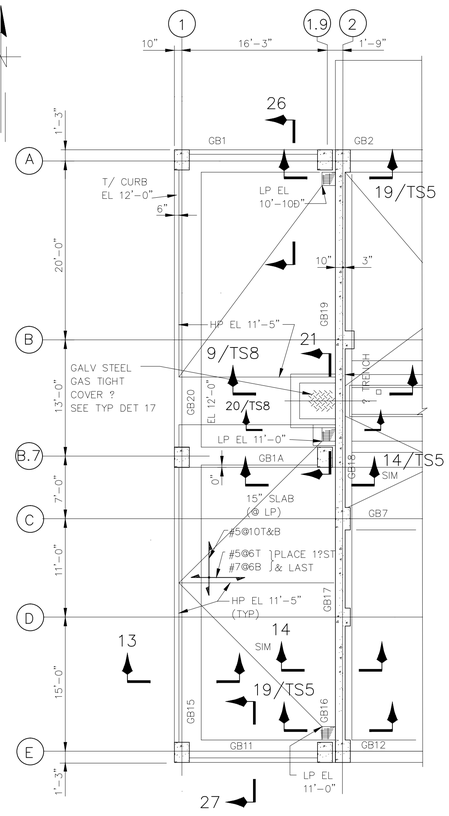

FOR REMAINDER OF PLAN, SEE DRAWING TS2

REVISED PLAN AT EL 12'-0"

SCALE: 1"=1'-0"

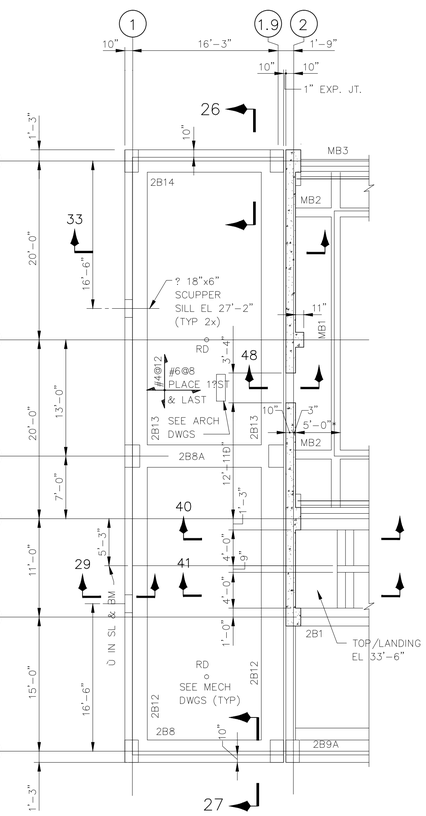

FOR REMAINDER OF PLAN, SEE DRAWING TS3

REVISED PLAN AT EL 35'-0"

SCALE: 1"=1'-0"

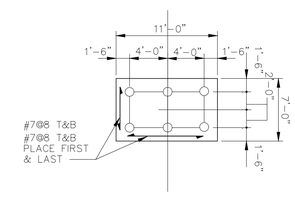

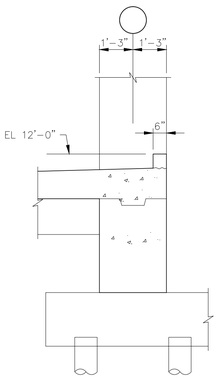

FOR REMAINDER OF SECTION, SEE DRAWING TS10

REVISED SECTION 26 (SHOWN)
REVISED SECTION 27 (OPP HAND)

SCALE: 1"=1'-0"

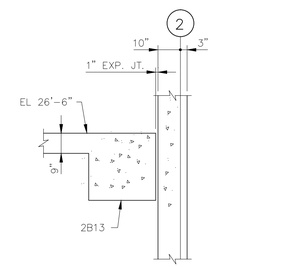

FOR REMAINDER OF SECTION, SEE DRAWING TS4

REVISED SECTION 33

SCALE: 1"=1'-0"

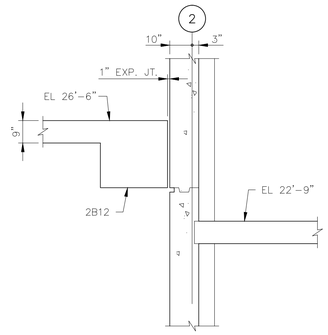

FOR REMAINDER OF SECTION, SEE DRAWING TS9

REVISED SECTION 40
REVISED SECTION 41

SCALE: 1"=1'-0"

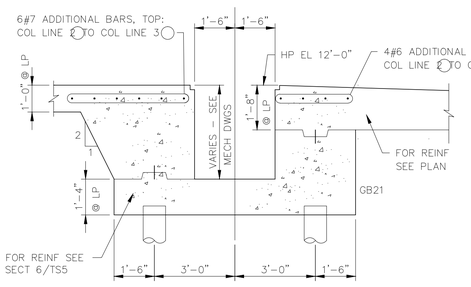

REPLACES SECTION ON DRAWING TS2

REVISED SECTION 4

SCALE: 1"=1'-0"

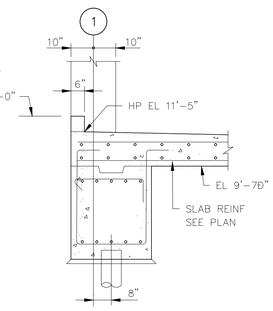

REPLACES SECTION ON DRAWING TS5

REVISED SECTION 13

SCALE: 1"=1'-0"

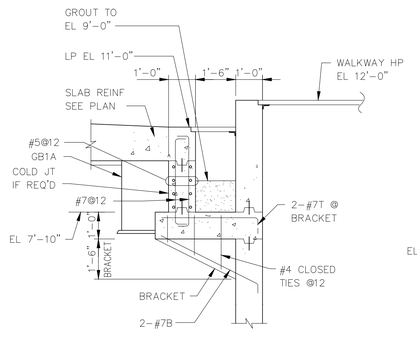

FOR REMAINDER OF SECTION, SEE DRAWING TS8

REVISED SECTION 21

SCALE: 1"=1'-0"

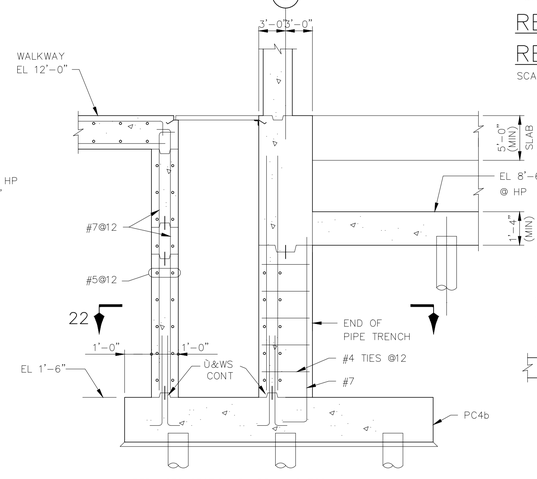

REPLACES SECTION ON DRAWING TS8

REVISED SECTION 9

SCALE: 1"=1'-0"

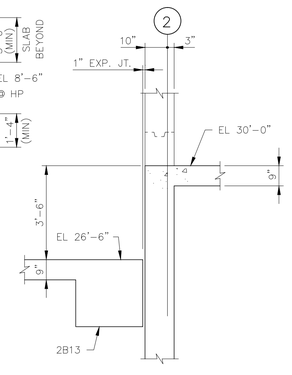

FOR REMAINDER OF SECTION, SEE DRAWING TS11

REVISED SECTION 48

SCALE: 1"=1'-0"

REVISES DRAWING NO. TS1-TS11

KLEIN AND HOFFMAN, INC. CONSULTING ENGINEERS 4350 W. CYPRESS STREET TAMPA, FLORIDA 33607 - 4135 PROJECT NO. 4187			
GREELEY AND HANSEN ENGINEERS 4350 WEST CYPRESS STREET TAMPA, FLORIDA 33607-4135	DESIGNED JVT DRAWN SKC CHECKED SKC	APPROVED _____ DATE _____ _____ DATE _____ GREELEY AND HANSEN, ENGINEERS	NO. / DATE / APPD / REVISION
SCALE 8 0 8 16 FT 1/8"=1'-0" 1 0 1 2 3 4 5 6 7 FT 3/8"=1'-0"	CITY OF TAMPA, FLORIDA HOOKERS POINT WASTEWATER TREATMENT PLANT PLANT EXPANSION PHASE I DIVISION 5H3B STANDBY POWER AND SLUDGE STORAGE FACILITIES	STANDBY POWER FACILITY STRUCTURAL REVISED PLANS, SECTIONS AND SCHEDULES	PROJ NO. 202G DWG SD-2 SHEET DATE MAY 1993 REV 0

5H3B_0TS-009A

FILE: H3B0002 SCALE: 1:96 05/10, 1993 at 09:18 #01.2*

REVISED BEAM SCHEDULE

FOR REMAINDER OF BEAM SCHEDULE, SEE DRAWINGS TS7 & TS8

AREA	MARK	SIZE W X D	BOTT BARS	TOP BARS A	TOP BARS B	TOP BARS C	W OR S SUPPORT	E OR N SUPPORT	STIRRUPS SIZE	STIRRUPS SPA EA END	STIRRUPS TYPE	REMARKS
	GB1	30x52	6-#7	6-#7 A1		6-#7 C1			#4	@12 THROUGHOUT	S2	BEAM DEPTH TAKEN FROM EL 11'-5"
	GB11	30x52	6-#7	4-#7 A1		4-#7 C1			#4	@12	S2	BEAM DEPTH TAKEN FROM EL 11'-5"
	GB15	36x55	7-#7	5-#7 A1		5-#7 C1	COL B.7,1		#4	@6	S2	BEAM DEPTH TAKEN FROM LP EL 11'-5". SEE SEC 13/TS5
	GB16	24x62	6-#8*	6-#8 A1		6-#8 C1			#4	@6	S4	SEE DWG TS8 FOR GRADE BM SECTION
	GB17	24x62	6-#8*			6-#8 C1			#4	@6	S4	SEE DWG TS8 FOR GRADE BM SECTION
	GB18	24x62	6-#9*			6-#8 C1			#4	@6	S4	SEE DWG TS8 FOR GRADE BM SECTION
	GB19	24x62	6-#8*	6-#8 A1					#4	@6	S4	SEE DWG TS8 FOR GRADE BM SECTION
	GB20	36x55	7-#7	5-#7 A1					#4	@6	S2	BEAM DEPTH TAKEN FROM LP EL 11'-5". SEE SECT 13/TS5
	GB1A	24x52	6-#7	12 # A1			2'-6" 2'-6"		#4	@6	S4	BEAM DEPTH TAKEN FROM EL 11'-5" 1/2 A1 EACH END
	2B8A	30x24	4-#8	6-#9 A1					#4	@8	S6	1/2 A1 EACH END

* LAP SPLICE 3 NOS BOTTOM BARS AT SUPPORTS

TYPE S4

NOTE:
PLAN, SECTIONS, BEAM SCHEDULE, COLUMN SCHEDULE AND OTHER DETAILS SHOWN HERE, SUPERSEDE THE RELEVANT DETAILS ON DRAWINGS TS1 THRU TS11.

COL. SCHEDULE

FOR REMAINDER OF COLUMN SCHEDULE, SEE DRAWING TS9

COLUMN MARK	A1.9 A1 B.7-1.9 B.7-1 E1.9 E1
HIGH ROOF EL 39'-6"	
LOW ROOF EL 26'-6"	
GROUND FLOOR HP EL 12'-0"	3-#9 20x30 8-#9T4
T/PILE CAP EL VARIES	

T4

REVISED PILE SCHEDULE

ITEM	MARK	NO. OF PILES	UPLIFT PILES	CUT-OFF ELEV.	REMARKS
		4	0	10'-8"	
		6	0	7'-2"	
		31	0	7'-3" 1	
		17	0	8'-10	GENERATOR BASES (INCL. FUTURE BASE)
		8	0	7'-6	GENERATOR BASES
		6	0	-0'-10"	
		21	0	10'-4"	
		3	0	7'-8"	
		24	0	(-) 3'-4"	
		24	0	5'-0"	
		93	0	4'-6"	
		10	0	4'-0"	
		23	0	6'-11"	

TOTAL NUMBER OF PILES THIS SCHEDULE = 270

KLEIN AND HOFFMAN, INC.
CONSULTING ENGINEERS
4350 W. CYPRESS STREET
TAMPA, FLORIDA 33607 - 4135
PROJECT NO. 4187

GREELEY AND HANSEN
ENGINEERS
4350 WEST CYPRESS STREET
TAMPA, FLORIDA 33607-4135

DESIGNED JVT
DRAWN SKC
CHECKED SKC

APPROVED _____ DATE _____
_____ DATE _____
GREELEY AND HANSEN, ENGINEERS

NO.	DATE	APPD	REVISION
1	6/4/93	SKC	PILE SCHED. CUT-OFF ELEV.

SCALE
8 0 8 16 FT 1/8"=1'-0"
1 0 1 2 3 4 5 6 7 FT 3/8"=1'-0"

CITY OF TAMPA, FLORIDA
HOOKERS POINT WASTEWATER TREATMENT PLANT
PLANT EXPANSION
PHASE I DIVISION 5H3B
STANDBY POWER AND SLUDGE STORAGE FACILITIES

STANDBY POWER FACILITY
STRUCTURAL
REVISED PLANS, SECTIONS AND SCHEDULES

REVISES DRAWING NO. TS1-TS11

PROJ NO. 202G
DWG SD-3
SHEET
DATE MAY 1993 REV 1

5H3B_0TS-009B

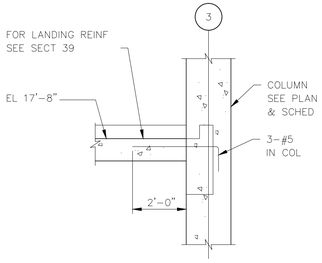

SECTION 38/TS3

SCALE: 1"=1'-0"

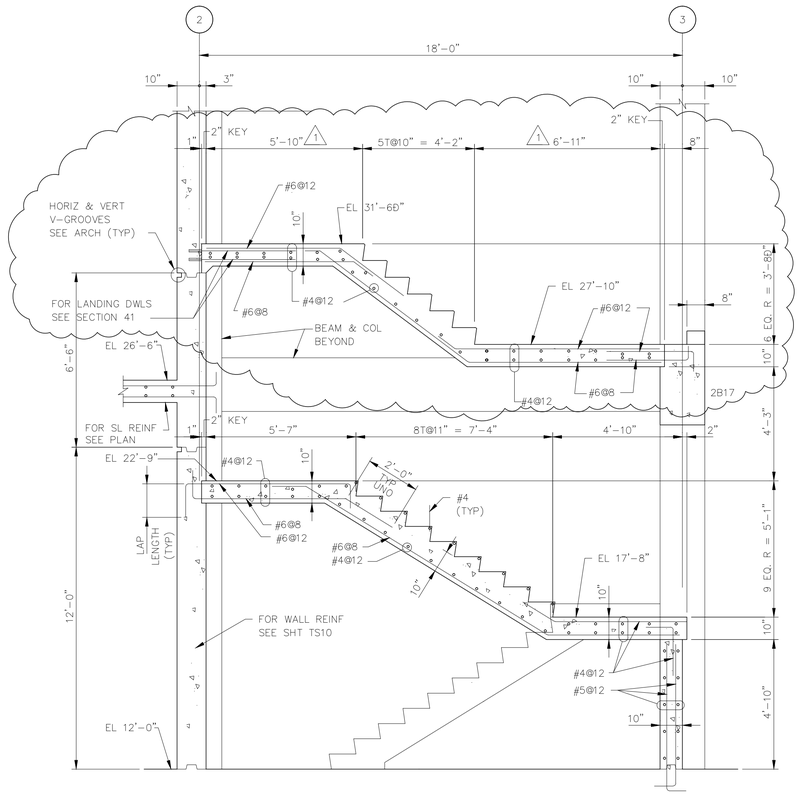

SECTION 40/TS3

SCALE: 1"=1'-0"

FLOOR SLAB AT EL 12'-0" & GRADE BMS NOT SHOWN

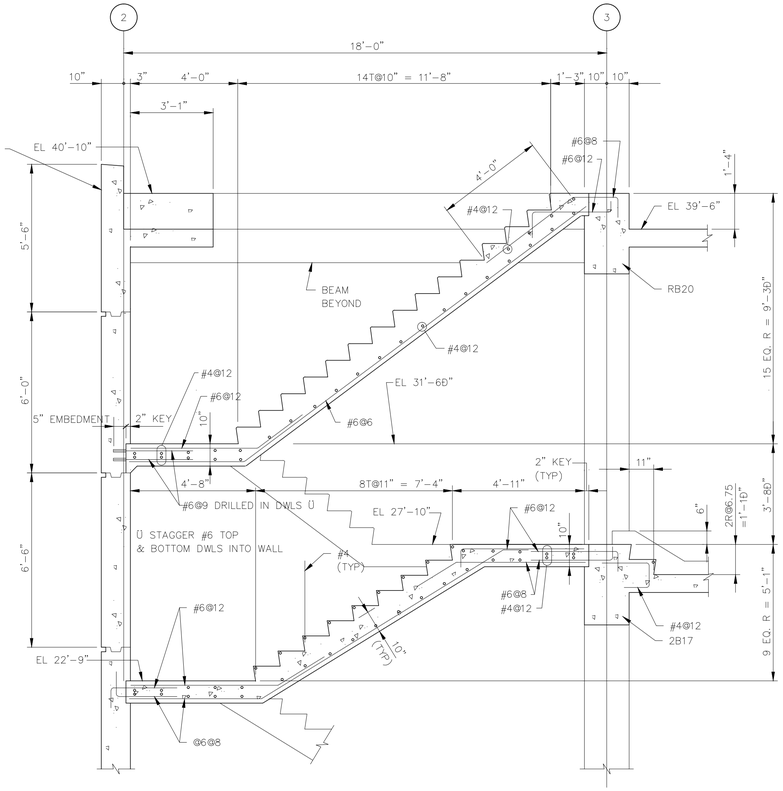

SECTION 41/TS3, 4

SCALE: 1"=1'-0"

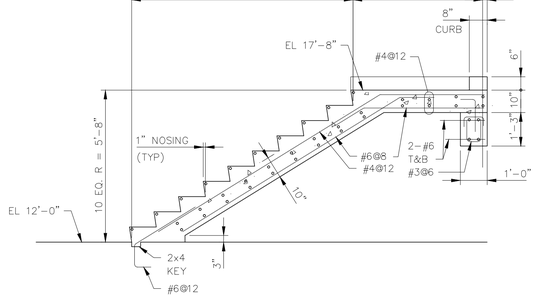

SECTION 33/TS3

SCALE: 1"=1'-0"

FLOOR SLAB AT EL 12'-0" & GRADE BMS NOT SHOWN

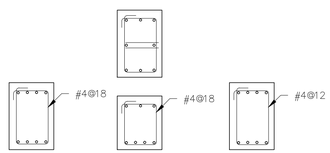

COLUMN TIES

NOTE: REFER TO FRAME F1 ELEVATION SHT TS6 FOR COLUMNS NOT INCLUDED

COLUMN SCHEDULE

COLUMN MARK	A1.9 A1 B.7-1.9 B.7-1 E1.9 E1	A2, A3 A8, C2, C3, C8	B2, B8 D2, D8	D3	E3	A1, B.7.1, E1, E2, E8
HIGH ROOF EL 39'-6"						
LOW ROOF EL 26'-6"		Ü	NO HK ON LINE B	10" Ü		
EL 24'-0"	3-#9					
GROUND FLOOR HP EL 12'-0"	20x30 8-#9T4	20x30 8-#9T1	20x24 6-#9T2	20x24 6-#9T2	20x30 8-#11T3	20x30 6-#9T2
T/PILE CAP EL VARIES						

KLEIN AND HOFFMAN, INC.
CONSULTING ENGINEERS
4350 W. CYPRESS STREET
TAMPA, FLORIDA 33607 – 4135
PROJECT NO. 4187

GREELEY AND HANSEN
ENGINEERS
4350 WEST CYPRESS STREET
TAMPA, FLORIDA 33607-4135

DESIGNED WRC, JAH
DRAWN KCS
CHECKED WRC

APPROVED
DATE
DATE
GREELEY AND HANSEN, ENGINEERS

NO.	DATE	APPD	REVISION
1	8/7/96		RECORD DWG REVISIONS

SCALE 1 0 1 2 3 4 5 6 7 FT 3/8"=1'-0"

CITY OF TAMPA, FLORIDA
HOOKERS POINT WASTEWATER TREATMENT PLANT
PLANT EXPANSION
PHASE I DIVISION 5H3B
STANDBY POWER AND SLUDGE STORAGE FACILITIES

STANDBY POWER FACILITY
STRUCTURAL
SECTIONS AND COLUMN SCHEDULE

PROJ NO. 202G
DWG TS9
SHEET
DATE DECEMBER 1991 REV 2

5H3B_0TS-009C

FILE: H3B50043 SCALE: 1:1 09/07, 1996 at 10:41 - "13_x4h (Hardware Lock)"

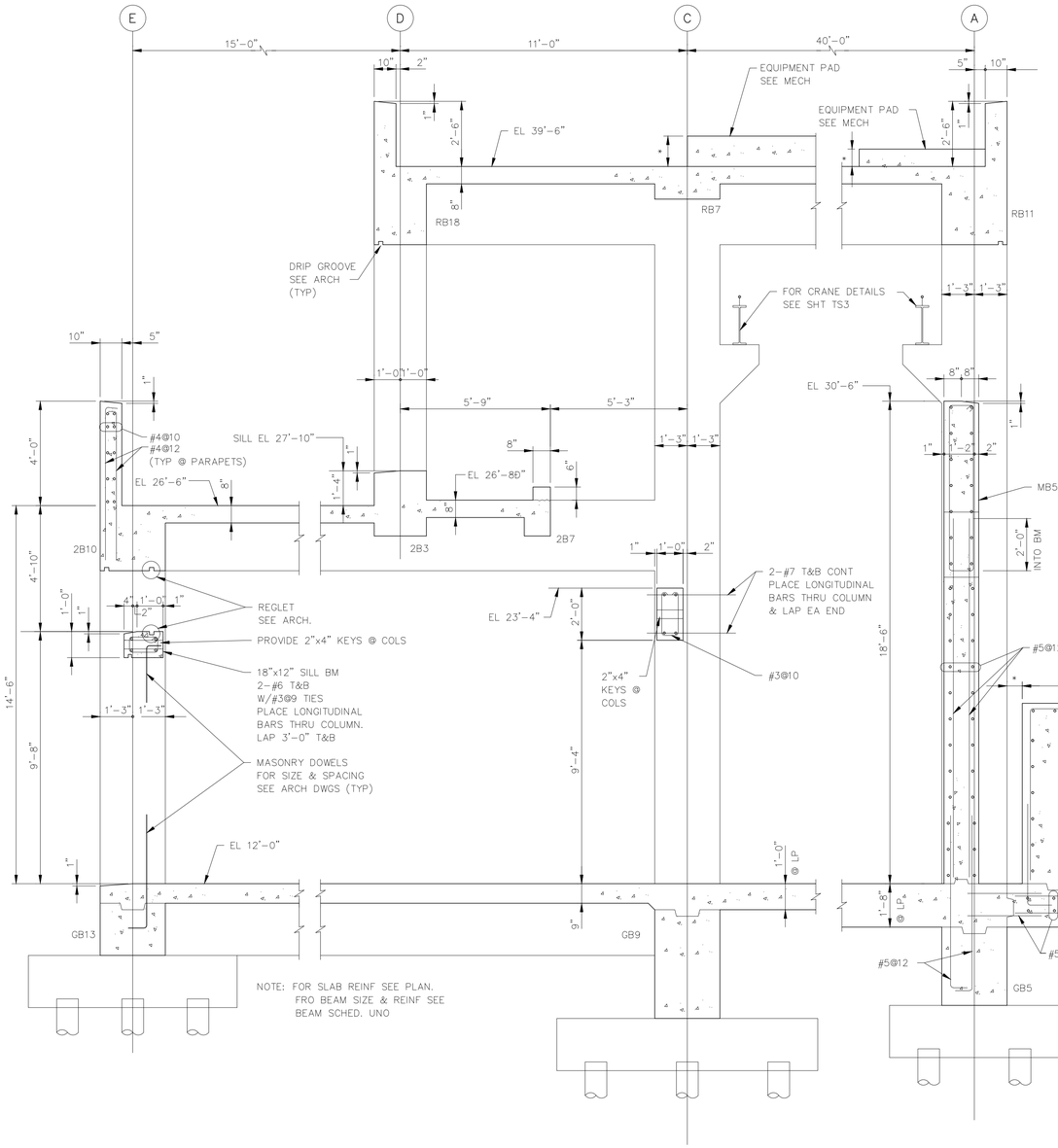

SECTION 23/TS2,3,4

SCALE: 1"=1'-0"

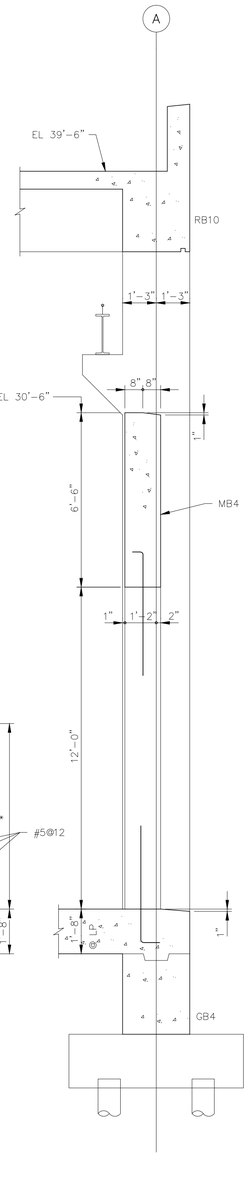

SECTION 24/TS2,3 4

SCALE: 1"=1'-0"

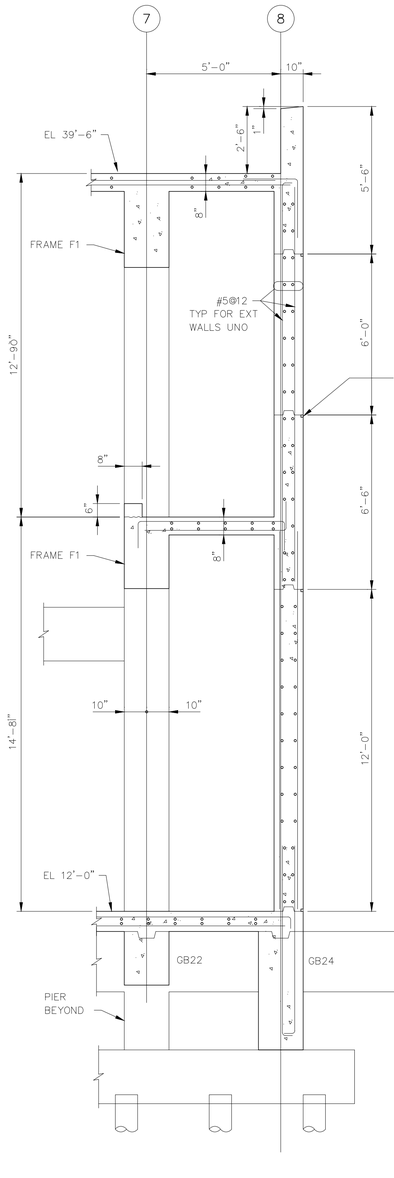

SECTION 25/TS2,3,4

SCALE: 1"=1'-0"

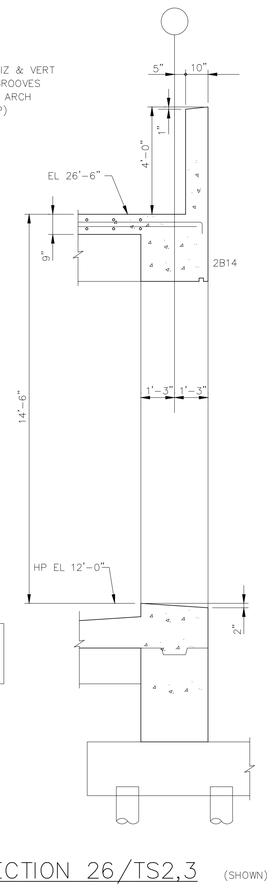

SECTION 26/TS2,3 (SHOWN)

SECTION 27/TS2,3 (OPP HAND)

SCALE: 1"=1'-0"

See Supplemental Drawing SD-2 and SD-3

RECORD DRAWING

THIS RECORD DRAWING IS NOT WARRANTED BUT IS BELIEVED TO REPRESENT CONDITIONS UPON COMPLETION OF CONSTRUCTION WITHIN REASONABLE TOLERANCES, BASED UPON THE INFORMATION FURNISHED TO THE ENGINEER PERTAINING TO CHANGES MADE DURING CONSTRUCTION.

KLEIN AND HOFFMAN, INC.
CONSULTING ENGINEERS
4350 W. CYPRESS STREET
TAMPA, FLORIDA 33607 – 4135
PROJECT NO. 4187

GREELEY AND HANSEN
ENGINEERS
1715 NORTH WESTSHORE BOULEVARD
TAMPA, FLORIDA 33607-4135

DESIGNED WRC, JAH
DRAWN KCS
CHECKED WRC

APPROVED _____ DATE _____

_____ DATE _____
GREELEY AND HANSEN, ENGINEERS

NO.	DATE	APPD	REVISION
2	8/15/96		RECORD DWG REVISIONS

SCALE 1 0 1 2 3 4 5 6 7 FT 3/8"=1'-0"

CITY OF TAMPA, FLORIDA
HOOKERS POINT WASTEWATER TREATMENT PLANT
PLANT EXPANSION
PHASE I DIVISION 5H3B
STANDBY POWER AND SLUDGE STORAGE FACILITIES

STANDBY POWER FACILITY
STRUCTURAL
SECTIONS

PROJ NO. 202G
DWG TS10
SHEET
DATE DECEMBER 1991 REV 2

5H3B_TS-010

FILE: H3B-TS10 SCALE: 1:32 09/09/96 at 07:44 - "13_24h (Hardware Lock)"

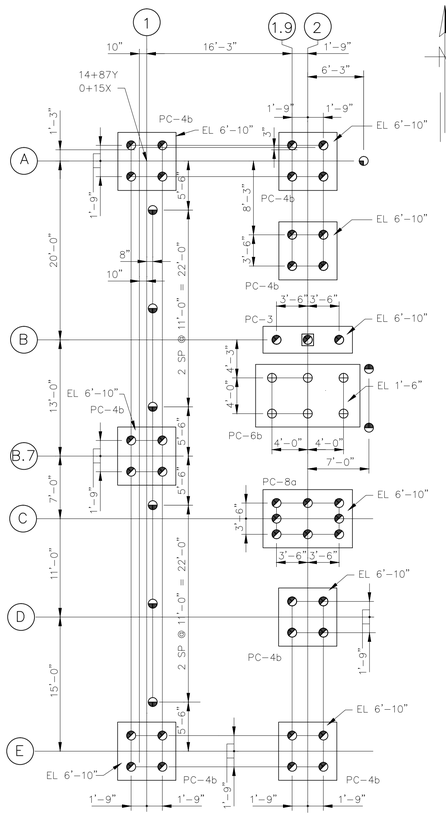

FOR REMAINDER OF PLAN, SEE DRAWING TS1

REVISED PILE PLAN

SCALE: 1"=1'-0"

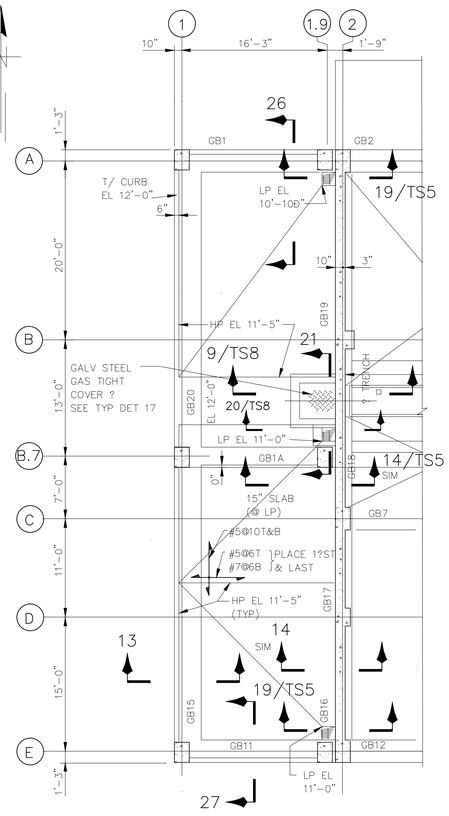

FOR REMAINDER OF PLAN, SEE DRAWING TS2

REVISED PLAN AT EL 12'-0"

SCALE: 1"=1'-0"

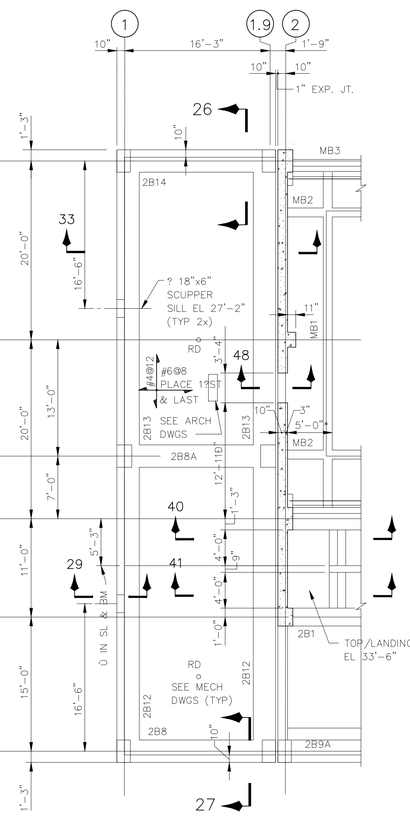

FOR REMAINDER OF PLAN, SEE DRAWING TS3

REVISED PLAN AT EL 35'-0"

SCALE: 1"=1'-0"

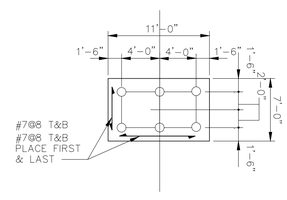

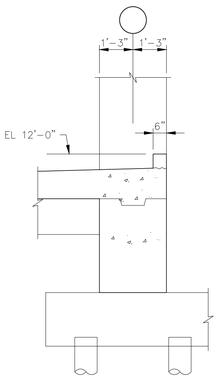

FOR REMAINDER OF SECTION, SEE DRAWING TS10

REVISED SECTION 26 (SHOWN)

REVISED SECTION 27 (OPP HAND)

SCALE: 1"=1'-0"

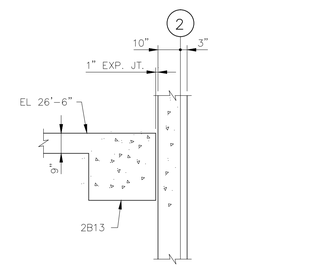

FOR REMAINDER OF SECTION, SEE DRAWING TS4

REVISED SECTION 33

SCALE: 1"=1'-0"

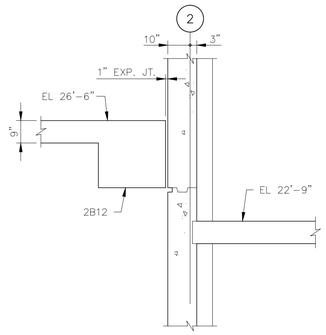

FOR REMAINDER OF SECTION, SEE DRAWING TS9

REVISED SECTION 40

REVISED SECTION 41

SCALE: 1"=1'-0"

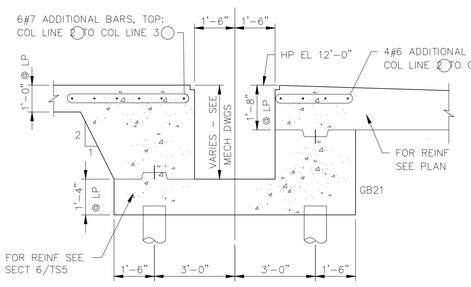

REPLACES SECTION ON DRAWING TS2

REVISED SECTION 4

SCALE: 1"=1'-0"

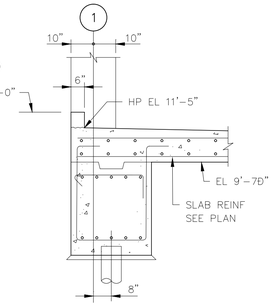

REPLACES SECTION ON DRAWING TS5

REVISED SECTION 13

SCALE: 1"=1'-0"

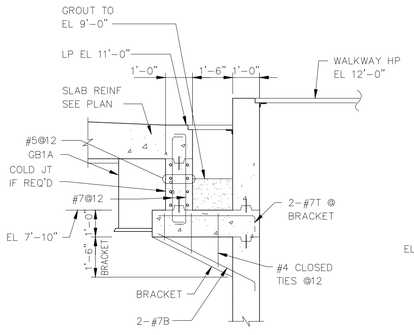

FOR REMAINDER OF SECTION, SEE DRAWING TS8

REVISED SECTION 21

SCALE: 1"=1'-0"

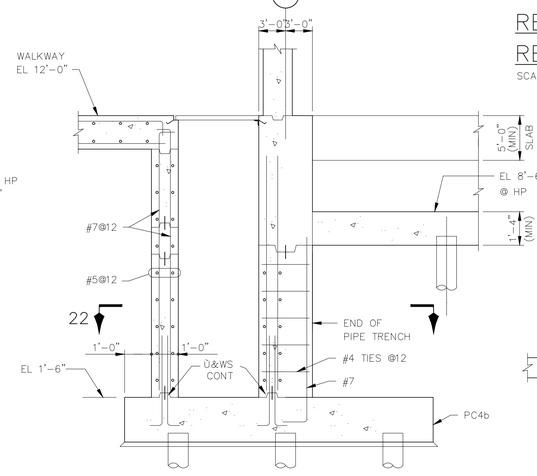

REPLACES SECTION ON DRAWING TS8

REVISED SECTION 9

SCALE: 1"=1'-0"

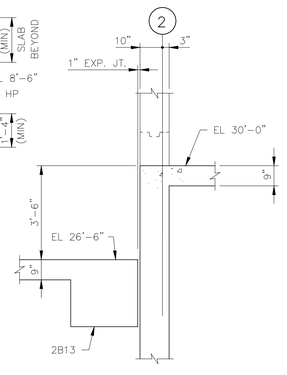

FOR REMAINDER OF SECTION, SEE DRAWING TS11

REVISED SECTION 48

SCALE: 1"=1'-0"

REVISES DRAWING NO. TS1-TS11

KLEIN AND HOFFMAN, INC.
CONSULTING ENGINEERS
4350 W. CYPRESS STREET
TAMPA, FLORIDA 33607 - 4135
PROJECT NO. 4187

GREELEY AND HANSEN
ENGINEERS
4350 WEST CYPRESS STREET
TAMPA, FLORIDA 33607-4135

DESIGNED JVT
DRAWN SKC
CHECKED SKC

APPROVED _____ DATE _____
_____ DATE _____
GREELEY AND HANSEN, ENGINEERS

NO.	DATE	APPD	REVISION

SCALE
8 0 8 16 FT 1/8"=1'-0"
1 0 1 2 3 4 5 6 7 FT 3/8"=1'-0"

CITY OF TAMPA, FLORIDA
HOOKERS POINT WASTEWATER TREATMENT PLANT
PLANT EXPANSION
PHASE I DIVISION 5H3B
STANDBY POWER AND SLUDGE STORAGE FACILITIES

STANDBY POWER FACILITY
STRUCTURAL
REVISED PLANS, SECTIONS AND SCHEDULES

PROJ NO. 202G
DWG SD-2
SHEET
DATE MAY 1993 REV 0

5H3B_0TS-010A

FILE: H3B0002 SCALE: 1:96 05/10, 1993 at 09:18 4911.2*

REVISED BEAM SCHEDULE

FOR REMAINDER OF BEAM SCHEDULE, SEE DRAWINGS TS7 & TS8

AREA	MARK	SIZE W X D	BOTT BARS	TOP BARS A	TOP BARS B	TOP BARS C	W OR S SUPPORT / E OR N SUPPORT	STIRRUPS SIZE	STIRRUPS SPA EA END	STIRRUPS TYPE	REMARKS
	GB1	30x52	6-#7	6-#7 A1		6-#7 C1		#4	@12 THROUGHOUT	S2	BEAM DEPTH TAKEN FROM EL 11'-5"
	GB11	30x52	6-#7	4-#7 A1		4-#7 C1		#4	@12	S2	BEAM DEPTH TAKEN FROM EL 11'-5"
	GB15	36x55	7-#7	5-#7 A1		5-#7 C1	COL B.7,1	#4	@6	S2	BEAM DEPTH TAKEN FROM LP EL 11'-5". SEE SEC 13/TS5
	GB16	24x62	6-#8*	6-#8 A1		6-#8 C1		#4	@6	S4	SEE DWG TS8 FOR GRADE BM SECTION
	GB17	24x62	6-#8*			6-#8 C1		#4	@6	S4	SEE DWG TS8 FOR GRADE BM SECTION
	GB18	24x62	6-#9*			6-#8 C1		#4	@6	S4	SEE DWG TS8 FOR GRADE BM SECTION
	GB19	24x62	6-#8*	6-#8 A1				#4	@6	S4	SEE DWG TS8 FOR GRADE BM SECTION
	GB20	36x55	7-#7	5-#7 A1				#4	@6	S2	BEAM DEPTH TAKEN FROM LP EL 11'-5". SEE SECT 13/TS5
	GB1A	24x52	6-#7	12 # A1			2'-6" / 2'-6"	#4	@6	S4	BEAM DEPTH TAKEN FROM EL 11'-5" 1/2 A1 EACH END
	2B8A	30x24	4-#8	6-#9 A1				#4	@8	S6	1/2 A1 EACH END

* LAP SPLICE 3 NOS BOTTOM BARS AT SUPPORTS

TYPE S4

NOTE:
PLAN, SECTIONS, BEAM SCHEDULE, COLUMN SCHEDULE AND OTHER DETAILS SHOWN HERE, SUPERSEDE THE RELEVANT DETAILS ON DRAWINGS TS1 THRU TS11.

COL. SCHEDULE

FOR REMAINDER OF COLUMN SCHEDULE, SEE DRAWING TS9

COLUMN MARK	A1.9 A1 B.7-1.9 B.7-1 E1.9 E1
HIGH ROOF EL 39'-6"	
LOW ROOF EL 26'-6"	
GROUND FLOOR HP EL 12'-0"	3-#9 / 20x30 8-#9T4
T/PILE CAP EL VARIES	

T4

REVISED PILE SCHEDULE

ITEM	MARK	NO. OF PILES	UPLIFT PILES	CUT-OFF ELEV.	REMARKS
		4	0	10'-8"	
		6	0	7'-2"	
		31	0	7'-3" (1)	
		17	0	8'-10	GENERATOR BASES (INCL. FUTURE BASE)
		8	0	7'-6	GENERATOR BASES
		6	0	-0'-10"	
		21	0	10'-4"	
		3	0	7'-8"	
		24	0	(-) 3'-4"	
		24	0	5'-0"	
		93	0	4'-6"	
		10	0	4'-0"	
		23	0	6'-11"	

TOTAL NUMBER OF PILES THIS SCHEDULE = 270

REVISES DRAWING NO. TS1-TS11

KLEIN AND HOFFMAN, INC.
CONSULTING ENGINEERS
4350 W. CYPRESS STREET
TAMPA, FLORIDA 33607 - 4135
PROJECT NO. 4187

GREELEY AND HANSEN
ENGINEERS
4350 WEST CYPRESS STREET
TAMPA, FLORIDA 33607-4135

DESIGNED JVT
DRAWN SKC
CHECKED SKC

APPROVED _____ DATE _____
_____ DATE _____
GREELEY AND HANSEN, ENGINEERS

NO.	DATE	APPD	REVISION
1	6/4/93	SKC	PILE SCHED. CUT-OFF ELEV.

SCALE
8 0 8 16 FT 1/8"=1'-0"
1 0 1 2 3 4 5 6 7 FT 3/8"=1'-0"

CITY OF TAMPA, FLORIDA
HOOKERS POINT WASTEWATER TREATMENT PLANT
PLANT EXPANSION
PHASE I DIVISION 5H3B
STANDBY POWER AND SLUDGE STORAGE FACILITIES

STANDBY POWER FACILITY
STRUCTURAL
REVISED PLANS, SECTIONS AND SCHEDULES

PROJ NO. 202G
DWG SD-3
SHEET
DATE MAY 1993 REV 1

5H3B_0TS-010B

FILE: H:\ACSA\BK\SDV\SB50003 SCALE: 1:1 PLOT: MAY 14, 1993 at 14:28 PRT1 =2*

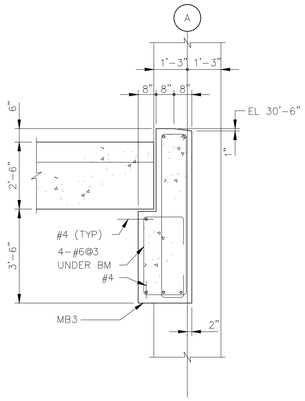

SECTION 36/TS3

SCALE: 1"=1'-0"

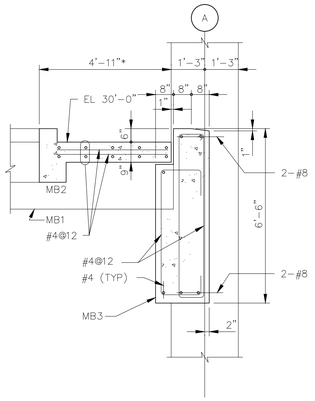

SECTION 37/TS3

SCALE: 1"=1'-0"

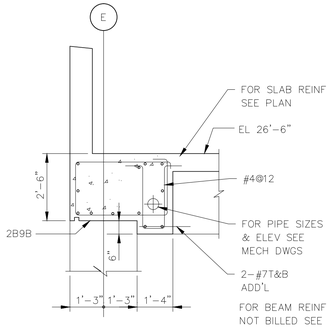

SECTION 42/TS3

SCALE: 1"=1'-0"

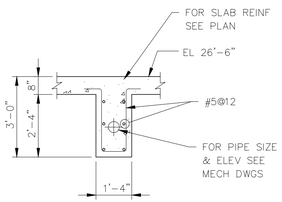

SECTION 43/TS3

SCALE: 1"=1'-0"

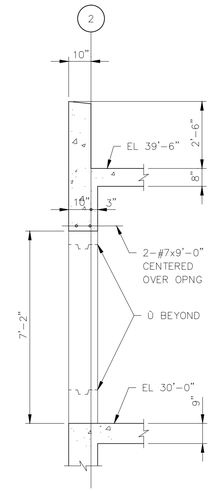

SECTION 48/TS3,4

SCALE: 1"=1'-0"

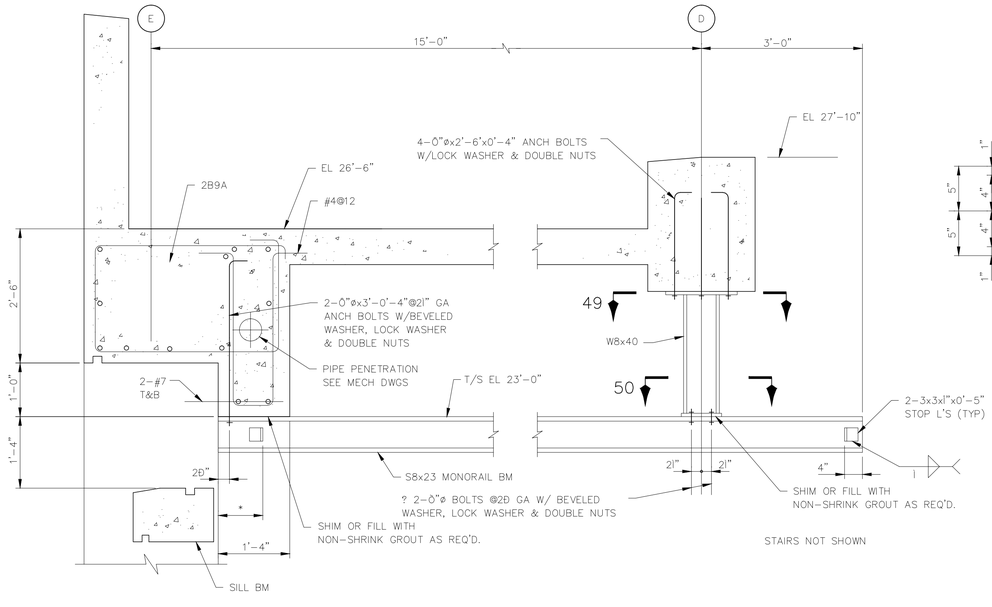

SECTION 44/TS3

SCALE: Ö"=1'-0"

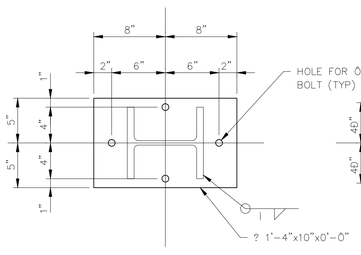

TOP PLATE

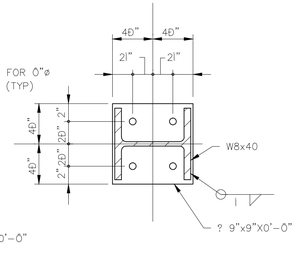

BASE PLATE

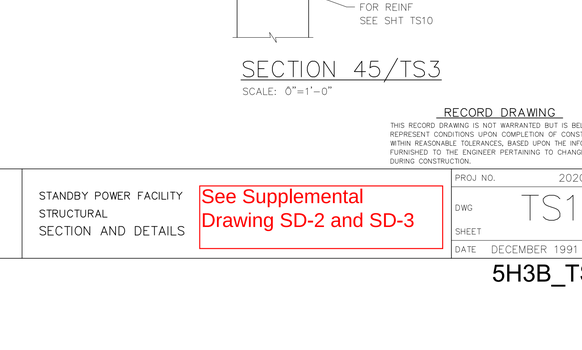

SECTION 45/TS3

SCALE: Ö"=1'-0"

SECTION 49

SCALE: 1Ð"=1'-0"

SECTION 50

SCALE: 1Ð"=1'-0"

RECORD DRAWING

THIS RECORD DRAWING IS NOT WARRANTED BUT IS BELIEVED TO REPRESENT CONDITIONS UPON COMPLETION OF CONSTRUCTION WITHIN REASONABLE TOLERANCES, BASED UPON THE INFORMATION FURNISHED TO THE ENGINEER PERTAINING TO CHANGES MADE DURING CONSTRUCTION.

KLEIN AND HOFFMAN, INC.
CONSULTING ENGINEERS
4350 W. CYPRESS STREET
TAMPA, FLORIDA 33607 - 4135
PROJECT NO. 4187

GREELEY AND HANSEN
ENGINEERS
1715 NORTH WESTSHORE BOULEVARD
TAMPA, FLORIDA 33607-4135

DESIGNED WRC, JAH
DRAWN KCS
CHECKED WRC

APPROVED _____ DATE _____
_____ DATE _____
GREELEY AND HANSEN, ENGINEERS

NO.	DATE	APPD	REVISION
3	8/1/96		RECORD DWG REVISIONS

SCALE
1 0 1 2 3 4 5 6 7 FT 3/8"=1'-0"
1 0 1 2 3 FT 3/4"=1'-0"
1 0 1 FT 1 1/2"=1'-0"

CITY OF TAMPA, FLORIDA
HOOKERS POINT WASTEWATER TREATMENT PLANT
PLANT EXPANSION
PHASE I DIVISION 5H3B
STANDBY POWER AND SLUDGE STORAGE FACILITIES

STANDBY POWER FACILITY
STRUCTURAL
SECTION AND DETAILS

See Supplemental Drawing SD-2 and SD-3

PROJ NO. 202G
DWG TS11
SHEET
DATE DECEMBER 1991 REV 3

5H3B_TS-011

FILE: H3B-TS11 SCALE: 1:32 09/10, 1996 at 10:27 - **13_4Ñ (hardware Lock)*

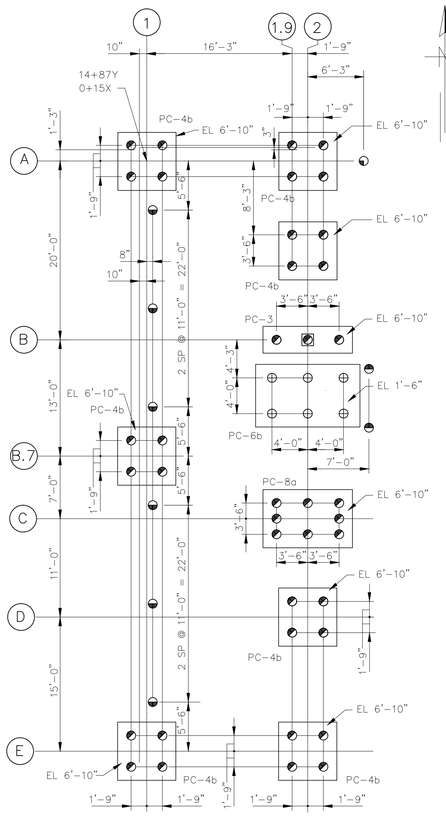

FOR REMAINDER OF PLAN, SEE DRAWING TS1

REVISED PILE PLAN

SCALE: 1/8"=1'-0"

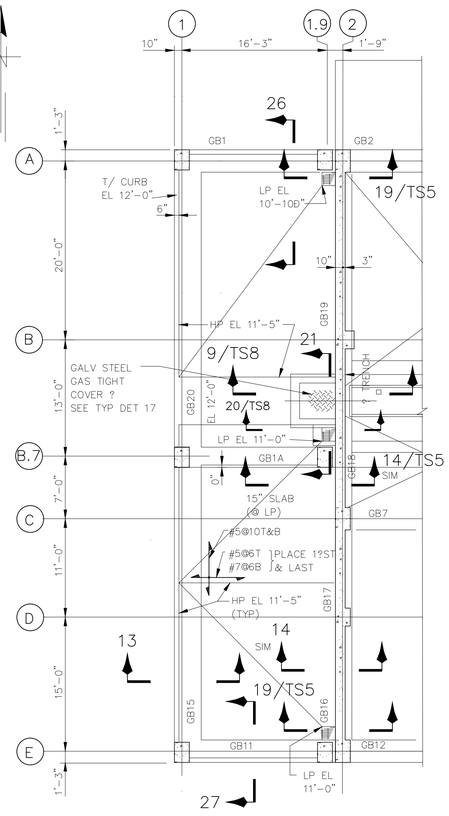

FOR REMAINDER OF PLAN, SEE DRAWING TS2

REVISED PLAN AT EL 12'-0"

SCALE: 1/8"=1'-0"

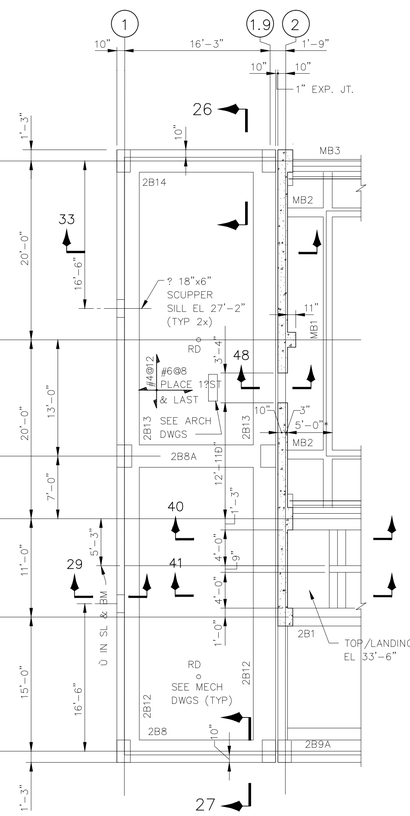

FOR REMAINDER OF PLAN, SEE DRAWING TS3

REVISED PLAN AT EL 35'-0"

SCALE: 1/8"=1'-0"

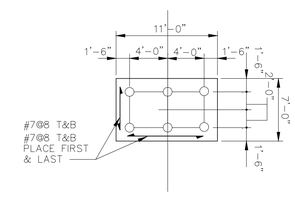

PC-6b
H=2'-8"

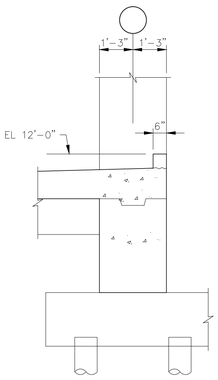

FOR REMAINDER OF SECTION, SEE DRAWING TS10

REVISED SECTION 26 (SHOWN)
REVISED SECTION 27 (OPP HAND)

SCALE: 1"=1'-0"

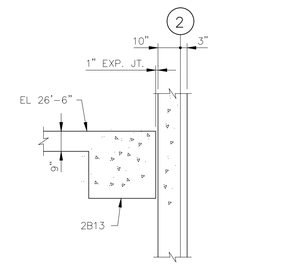

FOR REMAINDER OF SECTION, SEE DRAWING TS4

REVISED SECTION 33

SCALE: 1"=1'-0"

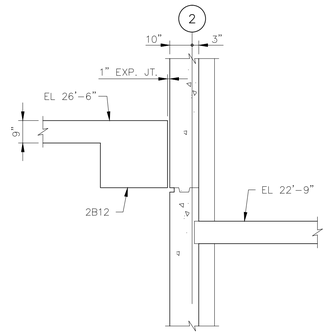

FOR REMAINDER OF SECTION, SEE DRAWING TS9

REVISED SECTION 40
REVISED SECTION 41

SCALE: 1"=1'-0"

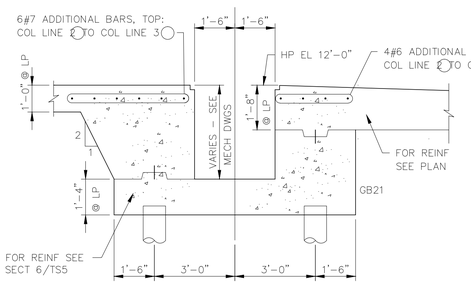

REPLACES SECTION ON DRAWING TS2

REVISED SECTION 4

SCALE: 1"=1'-0"

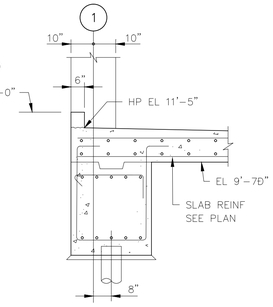

REPLACES SECTION ON DRAWING TS5

REVISED SECTION 13

SCALE: 1"=1'-0"

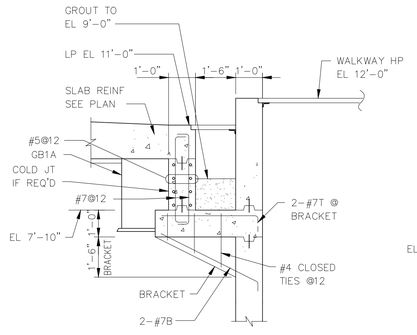

FOR REMAINDER OF SECTION, SEE DRAWING TS8

REVISED SECTION 21

SCALE: 1"=1'-0"

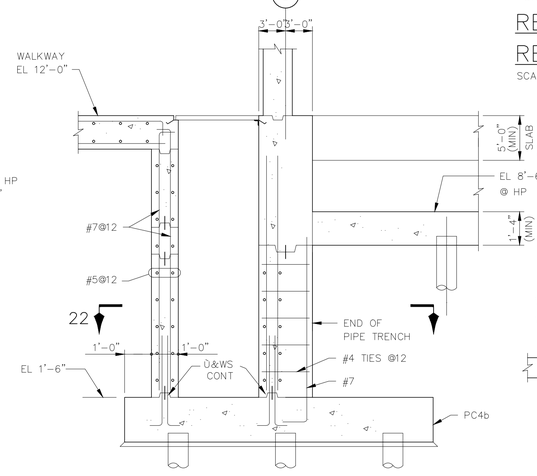

REPLACES SECTION ON DRAWING TS8

REVISED SECTION 9

SCALE: 1"=1'-0"

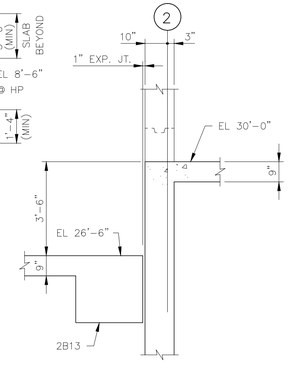

FOR REMAINDER OF SECTION, SEE DRAWING TS11

REVISED SECTION 48

SCALE: 1"=1'-0"

REVISES DRAWING NO. TS1-TS11

KLEIN AND HOFFMAN, INC.
CONSULTING ENGINEERS
4350 W. CYPRESS STREET
TAMPA, FLORIDA 33607 - 4135
PROJECT NO. 4187

GREELEY AND HANSEN
ENGINEERS
4350 WEST CYPRESS STREET
TAMPA, FLORIDA 33607-4135

DESIGNED JVT
DRAWN SKC
CHECKED SKC

APPROVED
DATE
DATE
GREELEY AND HANSEN, ENGINEERS

NO.	DATE	APPD	REVISION

SCALE
8 0 8 16 FT 1/8"=1'-0"
1 0 1 2 3 4 5 6 7 FT 3/8"=1'-0"

CITY OF TAMPA, FLORIDA
HOOKERS POINT WASTEWATER TREATMENT PLANT
PLANT EXPANSION
PHASE I DIVISION 5H3B
STANDBY POWER AND SLUDGE STORAGE FACILITIES

STANDBY POWER FACILITY
STRUCTURAL
REVISED PLANS, SECTIONS AND SCHEDULES

PROJ NO. 202G
DWG SD-2
SHEET
DATE MAY 1993 REV 0

5H3B_TS-011A

FILE: H3B0002 SCALE: 1:96 05/10, 1993 at 09:18 4911.2*

REVISED BEAM SCHEDULE

FOR REMAINDER OF BEAM SCHEDULE, SEE DRAWINGS TS7 & TS8

AREA	MARK	SIZE W X D	BOTT BARS	TOP BARS A	TOP BARS B	TOP BARS C	W OR S SUPPORT / E OR N SUPPORT	STIRRUPS SIZE	STIRRUPS SPA EA END	STIRRUPS TYPE	REMARKS
	GB1	30x52	6-#7	6-#7 A1		6-#7 C1		#4	@12 THROUGHOUT	S2	BEAM DEPTH TAKEN FROM EL 11'-5"
	GB11	30x52	6-#7	4-#7 A1		4-#7 C1		#4	@12	S2	BEAM DEPTH TAKEN FROM EL 11'-5"
	GB15	36x55	7-#7	5-#7 A1		5-#7 C1	COL B.7,1	#4	@6	S2	BEAM DEPTH TAKEN FROM LP EL 11'-5". SEE SEC 13/TS5
	GB16	24x62	6-#8*	6-#8 A1		6-#8 C1		#4	@6	S4	SEE DWG TS8 FOR GRADE BM SECTION
	GB17	24x62	6-#8*			6-#8 C1		#4	@6	S4	SEE DWG TS8 FOR GRADE BM SECTION
	GB18	24x62	6-#9*			6-#8 C1		#4	@6	S4	SEE DWG TS8 FOR GRADE BM SECTION
	GB19	24x62	6-#8*	6-#8 A1				#4	@6	S4	SEE DWG TS8 FOR GRADE BM SECTION
	GB20	36x55	7-#7	5-#7 A1				#4	@6	S2	BEAM DEPTH TAKEN FROM LP EL 11'-5". SEE SECT 13/TS5
	GB1A	24x52	6-#7	12 # A1			2'-6" / 2'-6"	#4	@6	S4	BEAM DEPTH TAKEN FROM EL 11'-5" 1/2 A1 EACH END
	2B8A	30x24	4-#8	6-#9 A1				#4	@8	S6	1/2 A1 EACH END

* LAP SPLICE 3 NOS BOTTOM BARS AT SUPPORTS

TYPE S4

NOTE:
PLAN, SECTIONS, BEAM SCHEDULE, COLUMN SCHEDULE AND OTHER DETAILS SHOWN HERE, SUPERSEDE THE RELEVANT DETAILS ON DRAWINGS TS1 THRU TS11.

COL. SCHEDULE

FOR REMAINDER OF COLUMN SCHEDULE, SEE DRAWING TS9

COLUMN MARK	A1.9 A1 B.7-1.9 B.7-1 E1.9 E1
HIGH ROOF EL 39'-6"	
LOW ROOF EL 26'-6"	
GROUND FLOOR HP EL 12'-0"	3-#9 / 20x30 8-#9T4
T/PILE CAP EL VARIES	

T4

REVISED PILE SCHEDULE

ITEM	MARK	NO. OF PILES	UPLIFT PILES	CUT-OFF ELEV.	REMARKS
		4	0	10'-8"	
		6	0	7'-2"	
		31	0	7'-3" (1)	
		17	0	8'-10	GENERATOR BASES (INCL. FUTURE BASE)
		8	0	7'-6	GENERATOR BASES
		6	0	-0'-10"	
		21	0	10'-4"	
		3	0	7'-8"	
		24	0	(-) 3'-4"	
		24	0	5'-0"	
		93	0	4'-6"	
		10	0	4'-0"	
		23	0	6'-11"	

TOTAL NUMBER OF PILES THIS SCHEDULE = 270

FILE: H:\VCSHJB\SDV\B50003 SCALE: 1:1 PLOT: MAY 14, 1993 at 14:28 PRT1 =2=

KLEIN AND HOFFMAN, INC.
CONSULTING ENGINEERS
4350 W. CYPRESS STREET
TAMPA, FLORIDA 33607 - 4135
PROJECT NO. 4187

GREELEY AND HANSEN
ENGINEERS
4350 WEST CYPRESS STREET
TAMPA, FLORIDA 33607-4135

DESIGNED JVT
DRAWN SKC
CHECKED SKC

APPROVED _____ DATE _____
_____ DATE _____
GREELEY AND HANSEN, ENGINEERS

NO.	DATE	APPD	REVISION
1	6/4/93	SKC	PILE SCHED. CUT-OFF ELEV.

SCALE
8 0 8 16 FT 1/8"=1'-0"
1 0 1 2 3 4 5 6 7 FT 3/8"=1'-0"

CITY OF TAMPA, FLORIDA
HOOKERS POINT WASTEWATER TREATMENT PLANT
PLANT EXPANSION
PHASE I DIVISION 5H3B
STANDBY POWER AND SLUDGE STORAGE FACILITIES

STANDBY POWER FACILITY
STRUCTURAL
REVISED PLANS, SECTIONS AND SCHEDULES

REVISES DRAWING NO. TS1-TS11

PROJ NO. 202G
DWG SD-3
SHEET
DATE MAY 1993 REV 1

5H3B_TS-011B

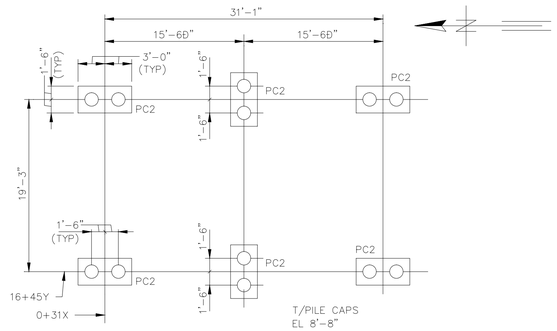

PILE PLAN
SCALE: 1"=1'-0"

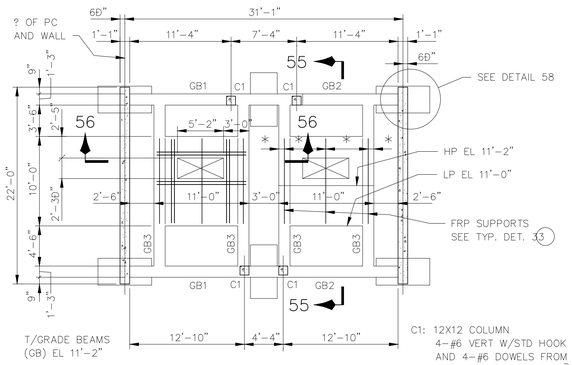

C1: 12X12 COLUMN
4-#6 VERT W/STD HOOK @ TOP AND 4-#6 DOWELS FROM GB
PROVIDE #4@12 TIES

PLAN EL 11'-2"
SCALE: 1"=1'-0"

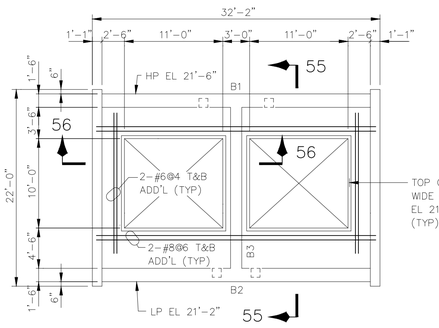

ROOF PLAN
SCALE: 1"=1'-0"

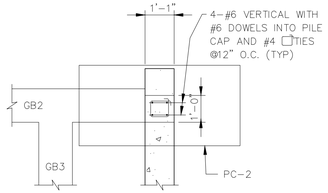

DETAIL 58
SCALE: 1"=1'-0"

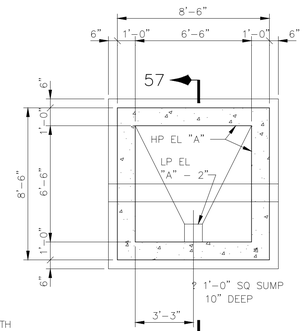

SECTIONAL PLAN
SCALE: 1"=1'-0"

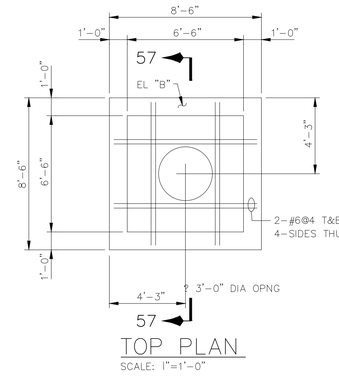

TOP PLAN
SCALE: 1"=1'-0"

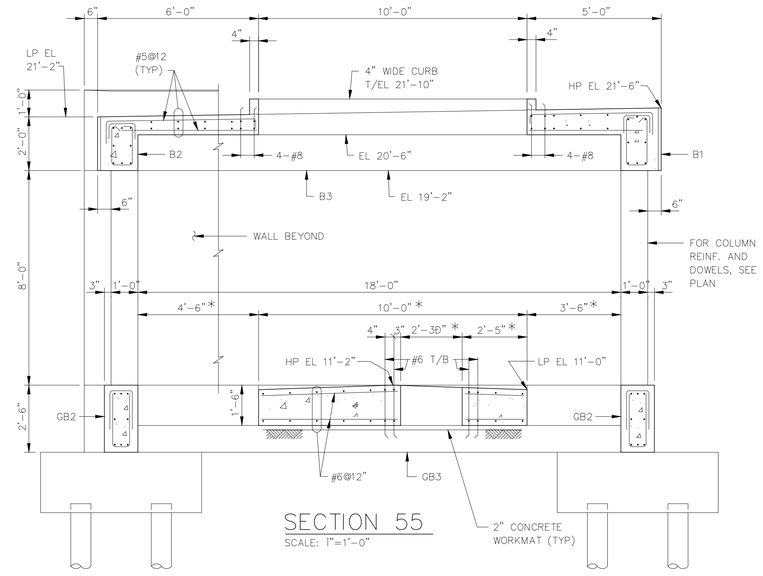

SECTION 55
SCALE: 1"=1'-0"

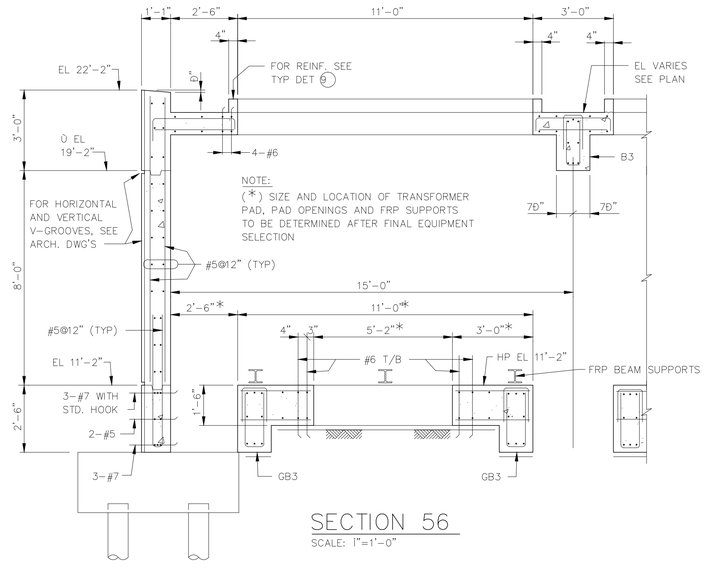

SECTION 56
SCALE: 1"=1'-0"

ELECT. MH SCHEDULE OF ELEV'S & DIMENSIONS			
MANHOLE NUMBER	EL "A"	EL "B"	INS DIM "C"
E30	-0'-6"	9'-0"	8'-6"
E31	-0'-6"	9'-0"	8'-6"

NOTES:
1. FOR LOCATION AND ORIENTATION OF ELECT. MANHOLES, SEE DWG AE1.
2. FOR SIZE AND LOCATION OF ELECT. DUCT OPENINGS AND PULLING IRONS, SEE DWG AE2.
3. FOR ELECT. DUCT DETAIL AT MANHOLES, SEE TYP DET 29

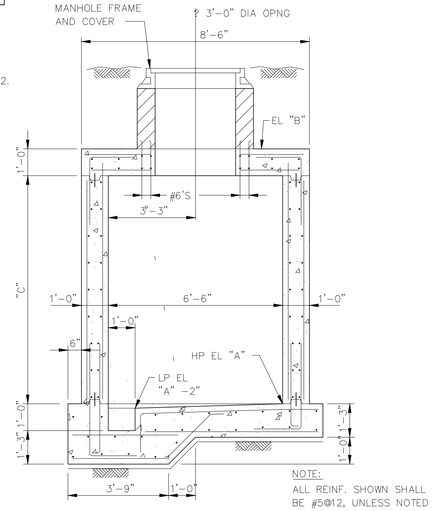

SECTION 57
SCALE: 1"=1'-0"

NOTE:
ALL REINF. SHOWN SHALL BE #5@12, UNLESS NOTED OTHERWISE.

RECORD DRAWING
THIS RECORD DRAWING IS NOT WARRANTED BUT IS BELIEVED TO REPRESENT CONDITIONS UPON COMPLETION OF CONSTRUCTION WITHIN REASONABLE TOLERANCES, BASED UPON THE INFORMATION FURNISHED TO THE ENGINEER PERTAINING TO CHANGES MADE DURING CONSTRUCTION.

PILE SCHEDULE				
MARK	CUT-OFF ELEV	NO. OF PILES	UPLIFT PILES	REMARKS
◯	6'-9"	12	NONE	

TOTAL NUMBER OF PILES ON THIS DWG = 12
THIS PILE SCHEDULE APPLIES TO THIS DWG ONLY.

PILE NOTES:
1. FOR PILE CAPACITIES AND ALL PILE DETAILS, SEE TYPICAL DETAIL 50 ON DWG AS3.

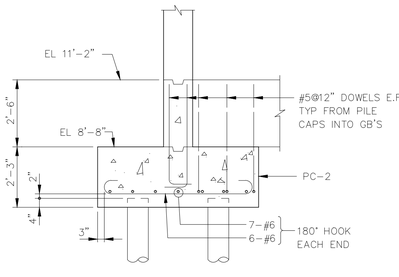

PILE CAP ELEVATION

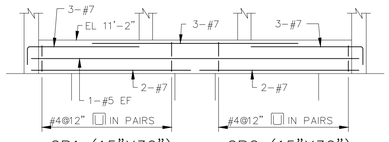

GB1 (15"X30")
GB2 (15"X30")

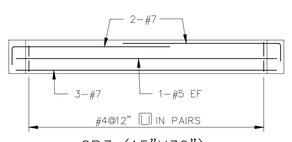

GB3 (15"X30")

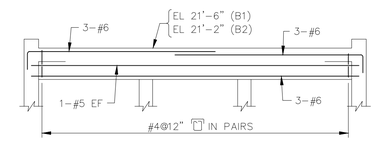

B1 (18"X28")
B2 (18"X24")

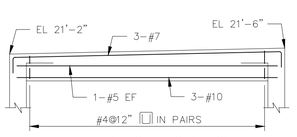

B3 (15"X24"/28")

NOTE:
FOR GENERAL NOTES & TYPICAL DETAILS SEE DWG AS1, 2 & 3

GREELEY AND HANSEN ENGINEERS 1715 NORTH WESTSHORE BOULEVARD TAMPA, FLORIDA 33607-4135	DESIGNED EP DRAWN JVT CHECKED EP	APPROVED _____ DATE _____ _____ DATE _____ GREELEY AND HANSEN, ENGINEERS	2 8/15/96 RECORD DWG REVISIONS NO. DATE APPD REVISION	SCALE 8 0 8 16 FT 1/8"=1'-0" 4 0 4 8 FT 1/4"=1'-0" 1 0 1 2 3 4 5 6 7 FT 3/8"=1'-0"

KLEIN AND HOFFMAN, INC.
CONSULTING ENGINEERS
100 SOUTH WACKER DRIVE
CHICAGO, ILLINOIS 60606
PROJECT NO. 4187

CITY OF TAMPA, FLORIDA
HOOKERS POINT WASTEWATER TREATMENT PLANT
PLANT EXPANSION
PHASE I DIVISION 5H3B
STANDBY POWER AND SLUDGE STORAGE FACILITIES

STANDBY POWER FACILITY
STRUCTURAL
TRANSFORMER YARD - PLANS AND SECTIONS

PROJ NO. 202G
DWG TS12
SHEET
DATE DECEMBER 1991 REV 2

5H3B_0TS-012

FILE: H3B-TS12 SCALE: 1:96 09/09, 1996 at 08:05 - "13_c4h (hardware lock)"

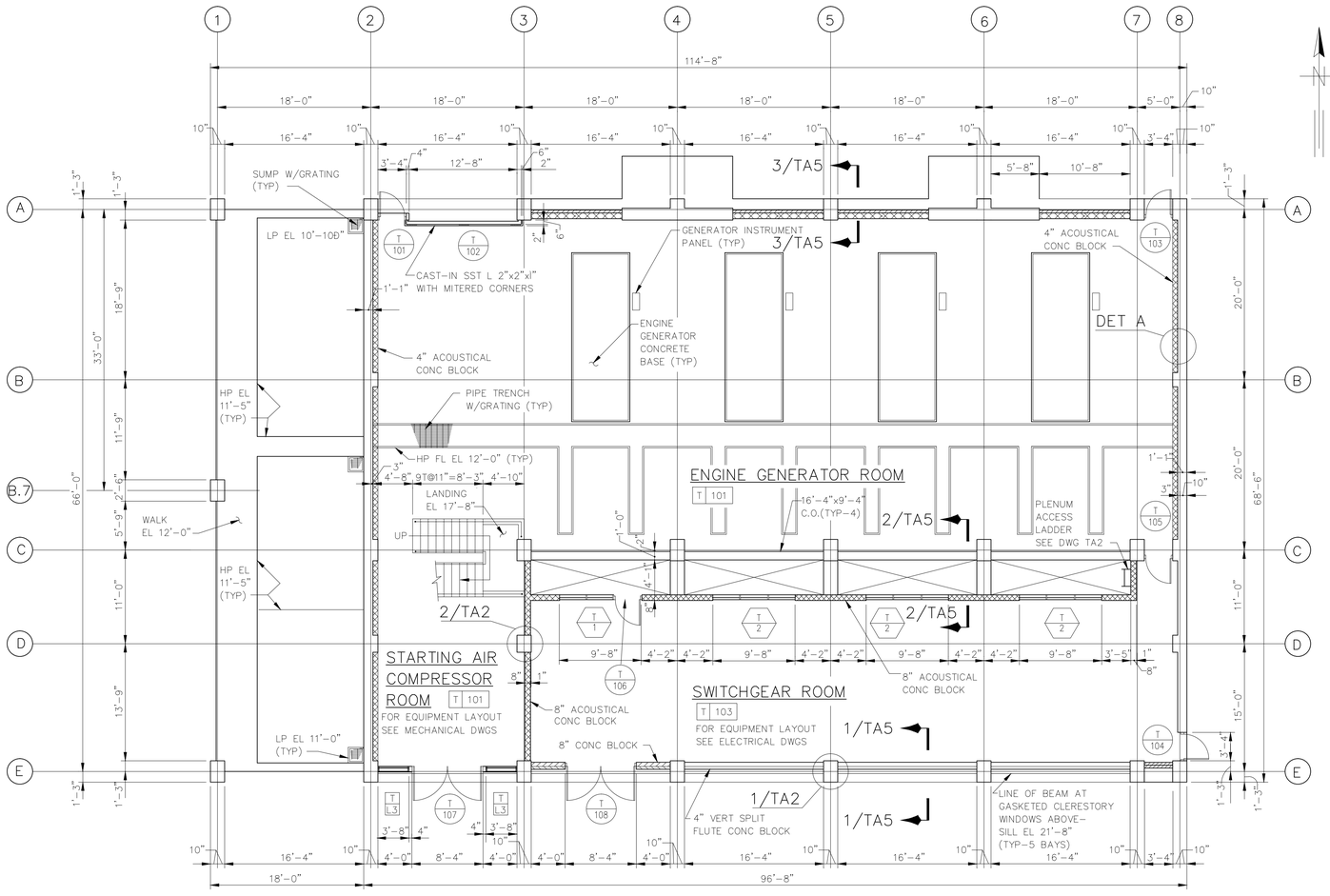

PLAN – FL EL 12'-0"

SCALE: 1" = 1'-0"

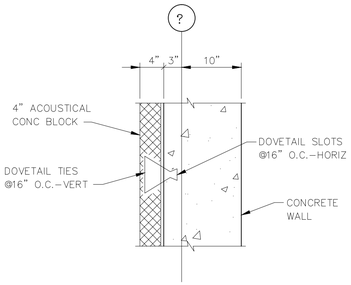

DETAIL A

SCALE: 1" = 1'-0"

GENERAL NOTES:

1. (*) – INDICATES DETERMINE DIMENSION AFTER FINAL SELECTION OF EQUIPMENT.
2. PROVIDE LINTELS SIMILAR TO DOOR OPENING LINTELS FOR ALL DUCT OPENINGS THROUGH MASONRY WALLS.
3. FOR LOCATION AND SIZE OF HVAC DUCTS AND ASSOCIATED FLOOR AND WALL OPENINGS SEE HVAC AND STRUCTURAL DRAWINGS.
4. FOR ROOM FINISH AND DOOR SCHEDULES AND DETAILS SEE DRAWING AA1.

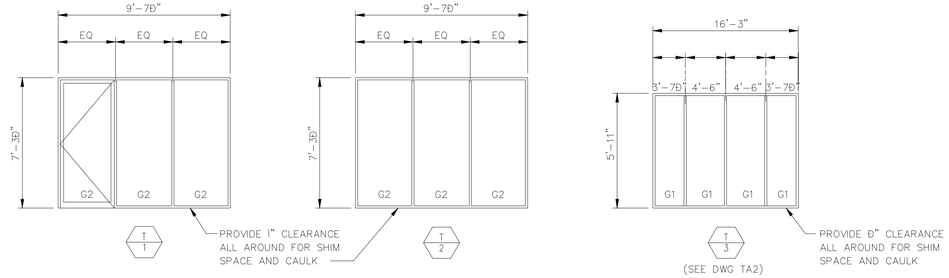

CURTAIN WALL ELEVATIONS

SCALE: 1" = 1'-0"

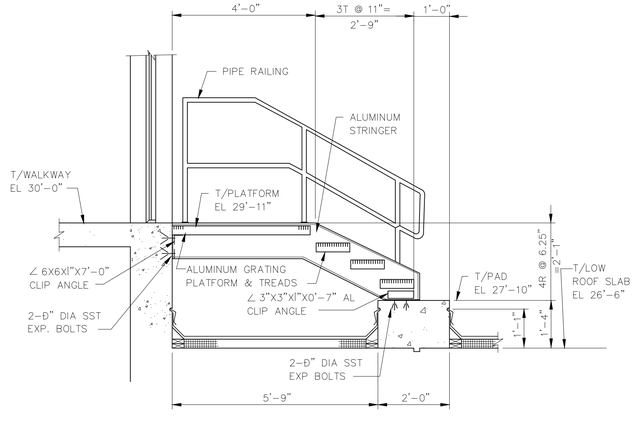

SECTION 1/TA2

SCALE: ⅜"=1'-0"

RECORD DRAWING

THIS RECORD DRAWING IS NOT WARRANTED BUT IS BELIEVED TO REPRESENT CONDITIONS UPON COMPLETION OF CONSTRUCTION WITHIN REASONABLE TOLERANCES, BASED UPON THE INFORMATION FURNISHED TO THE ENGINEER PERTAINING TO CHANGES MADE DURING CONSTRUCTION.

GREELEY AND HANSEN ENGINEERS 1715 NORTH WESTSHORE BOULEVARD TAMPA, FLORIDA 33607-4135	DESIGNED TGT DRAWN MSB, RAM CHECKED CDS	APPROVED _____ DATE _____ _____ DATE _____ GREELEY AND HANSEN, ENGINEERS	1 8/7/96 RECORD DWG REVISIONS NO. DATE APPD REVISION	SCALE 8 0 8 16 FT 1/8"=1'-0" 4 0 4 8 FT 1/4"=1'-0" 1 0 1 2 FT 1"=1'-0"	CITY OF TAMPA, FLORIDA HOOKERS POINT WASTEWATER TREATMENT PLANT PLANT EXPANSION PHASE I DIVISION 5H3B STANDBY POWER AND SLUDGE STORAGE FACILITIES	STANDBY POWER FACILITY ARCHITECTURAL PLAN AT EL 12'-0"	PROJ NO. 202G DWG TA1 SHEET DATE DECEMBER 1991 REV 2

5H3B_0TA-001

FILE: H3B-TA01 SCALE: 1:96 09/05, 1996 at 08:39 - *13_c4h (Hardware Lock)*

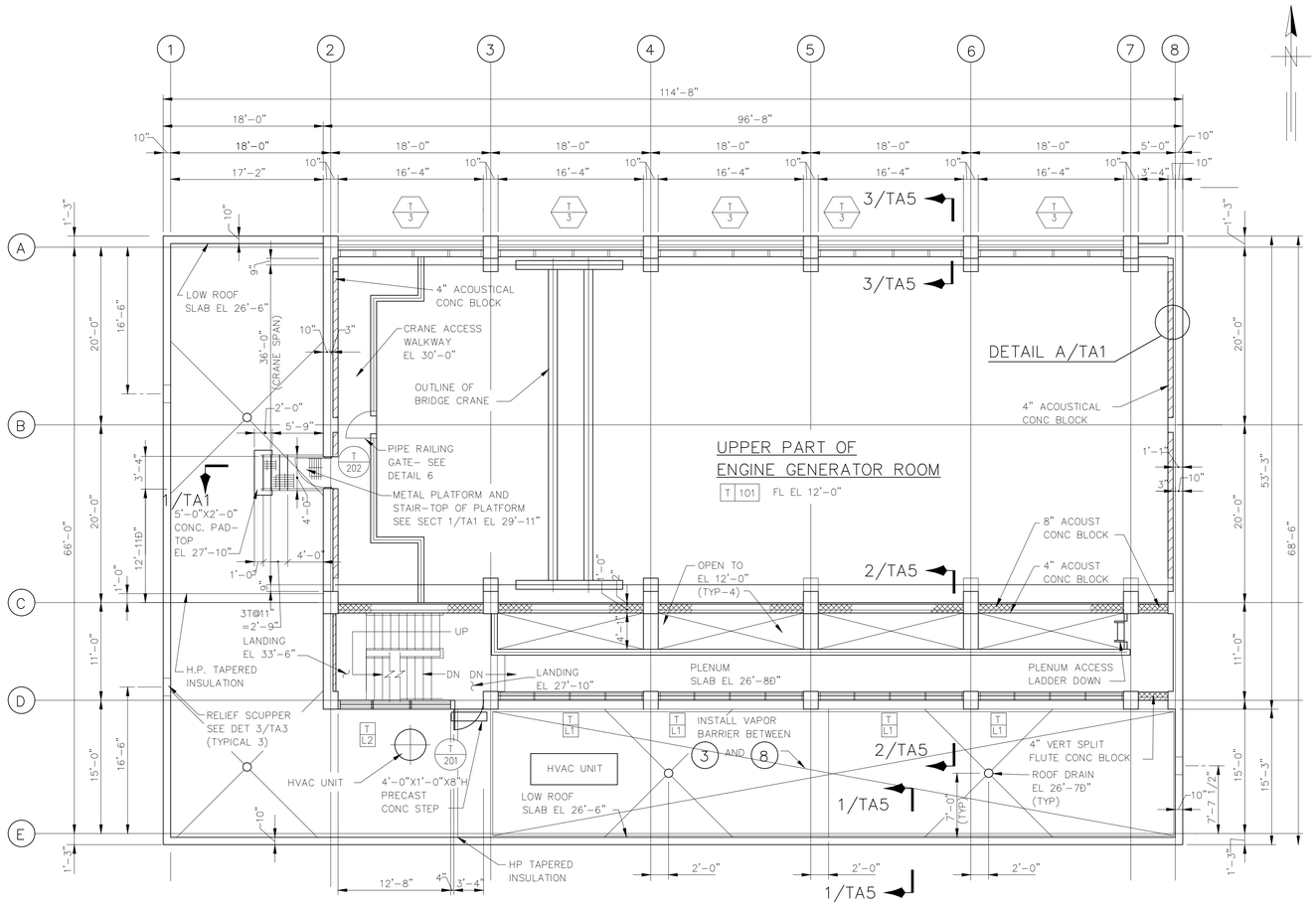

PLAN AT EL 27'-3"

SCALE: 1/8"= 1'-0"

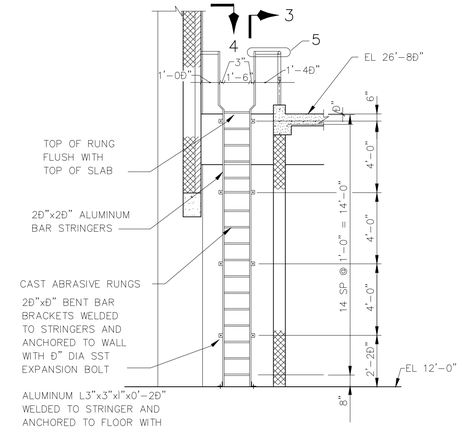

ELEVATION-PLENUM ACCESS LADDER

SCALE: 1"= 1'-0"

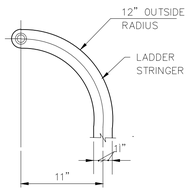

DETAIL 3

SCALE: 1D"= 1'-0"

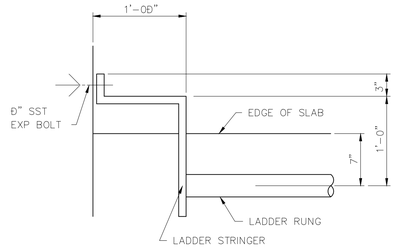

DETAIL 4 (PLAN VIEW)

SCALE: 1D"= 1'-0"

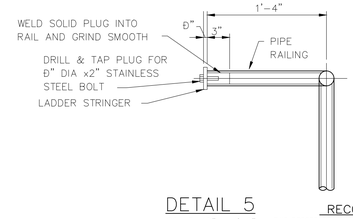

DETAIL 5

SCALE: 1D" = 1'-0"

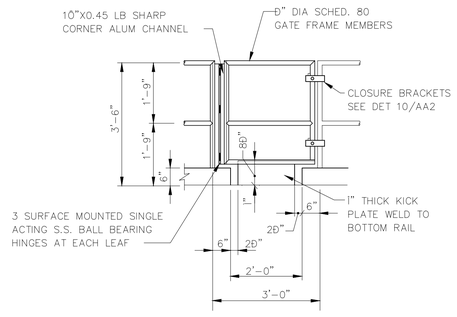

DETAIL 6/TA2

SCALE: D"=1'-0"

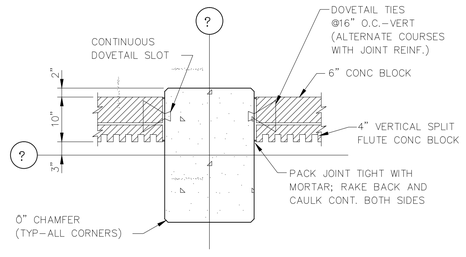

DETAIL 1/TA1

SCALE: O" = 1'-0"

NOTE:
PROVIDE TAPERED INSULATION SADDLES AT ALL ROOF MOUNTED EQUIPMENT.

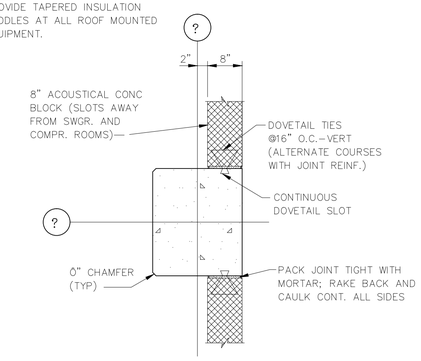

DETAIL 2/TA1

SCALE: O" = 1'-0"

RECORD DRAWING

THIS RECORD DRAWING IS NOT WARRANTED BUT IS BELIEVED TO REPRESENT CONDITIONS UPON COMPLETION OF CONSTRUCTION WITHIN REASONABLE TOLERANCES, BASED UPON THE INFORMATION FURNISHED TO THE ENGINEER PERTAINING TO CHANGES MADE DURING CONSTRUCTION.

GREELEY AND HANSEN ENGINEERS 1715 NORTH WESTSHORE BOULEVARD TAMPA, FLORIDA 33607-4135	DESIGNED TGT DRAWN MSB,PAE CHECKED CDS	APPROVED _____ DATE _____ _____ DATE _____ GREELEY AND HANSEN, ENGINEERS	4	8/7/96		RECORD DWG REVISIONS	SCALE 1/8"=1'-0" 3/4"=1'-0" 1 1/2"=1'-0"
			NO.	DATE	APPD	REVISION	

CITY OF TAMPA, FLORIDA
HOOKERS POINT WASTEWATER TREATMENT PLANT
PLANT EXPANSION
PHASE I DIVISION 5H3B
STANDBY POWER AND SLUDGE STORAGE FACILITIES

STANDBY POWER FACILITY
ARCHITECTURAL
PLAN AT EL 35'-0"

PROJ NO. 202G
DWG TA2
SHEET
DATE DECEMBER 1991 REV 4

5H3B_0TA-002

FILE: H3B-TA02 SCALE: 1:96 09/09, 1996 at 08:43 — *13_cah (Hardware Lock)*

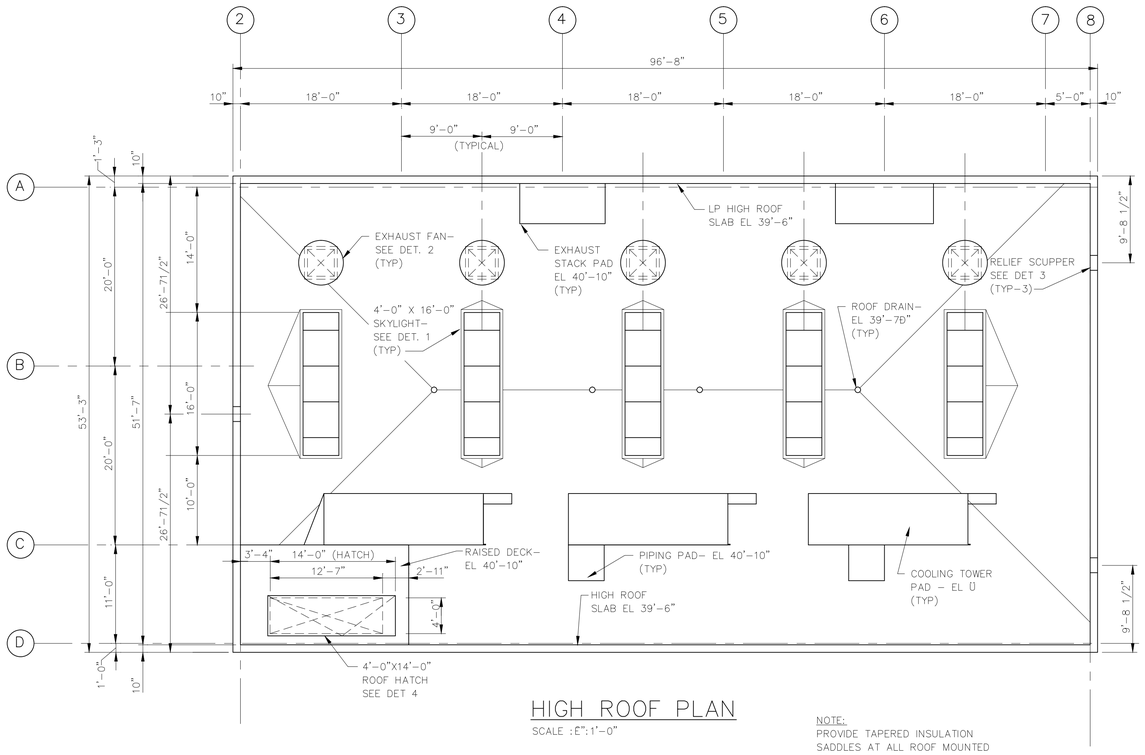

HIGH ROOF PLAN

SCALE :É":1'-0"

NOTE:
PROVIDE TAPERED INSULATION SADDLES AT ALL ROOF MOUNTED EQUIPMENT.

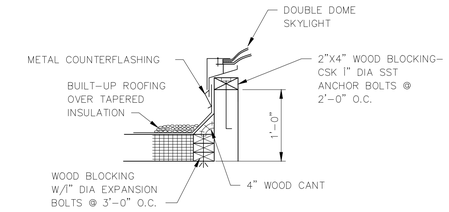

TYPICAL SKYLIGHT CURB DETAIL 1

SCALE: 1"=1'-0"

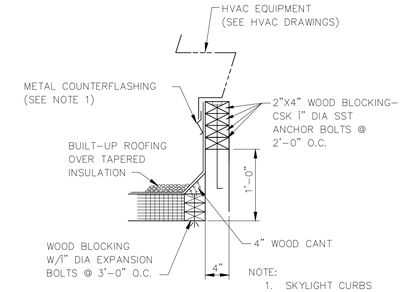

TYPICAL ROOF CURB DETAIL 2

SCALE: 1"=1'-0"

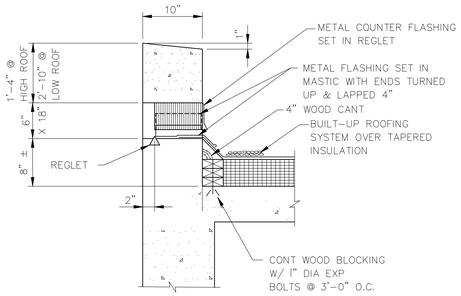

TYPICAL SCUPPER DETAIL 3

SCALE: 1"=1'-0"

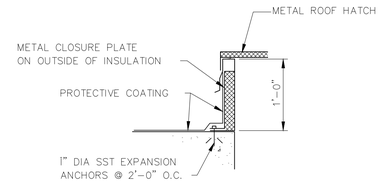

ROOF HATCH DETAIL 4

SCALE: 1"=1'-0"

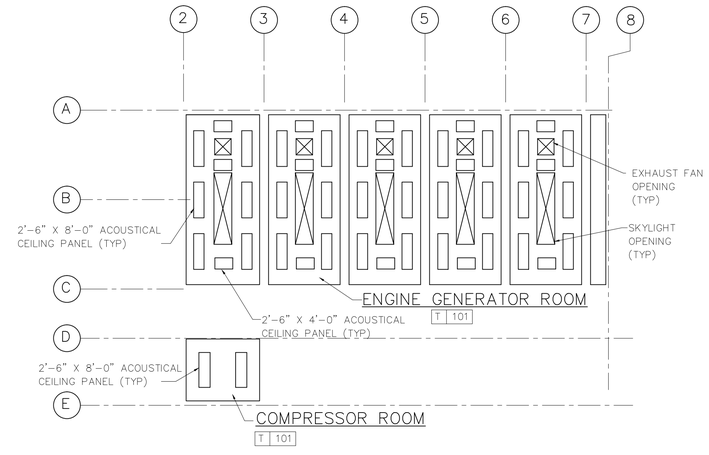

REFLECTED CEILING PLAN

SCALE:É"=1'-0"

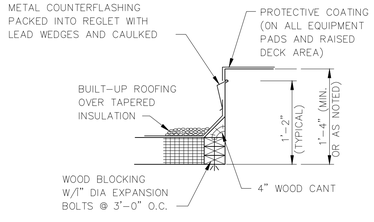

TYPICAL EQUIPMENT PAD/RAISED DECK DETAIL 5

SCALE: 1"=1'-0"

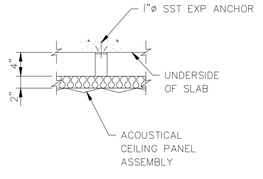

MOUNTING DETAIL 6

SCALE: 1"= 1'-0"

RECORD DRAWING

THIS RECORD DRAWING IS NOT WARRANTED BUT IS BELIEVED TO REPRESENT CONDITIONS UPON COMPLETION OF CONSTRUCTION WITHIN REASONABLE TOLERANCES, BASED UPON THE INFORMATION FURNISHED TO THE ENGINEER PERTAINING TO CHANGES MADE DURING CONSTRUCTION.

GREELEY AND HANSEN ENGINEERS 1715 NORTH WESTSHORE BOULEVARD TAMPA, FLORIDA 33607-4135	DESIGNED TGT DRAWN MSB CHECKED CDS	APPROVED _____ DATE _____ _____ DATE _____ GREELEY AND HANSEN, ENGINEERS	NO.	DATE	APPD	REVISION	SCALE 8 0 8 16 FT 1/8"=1'-0" 16 0 16 32 FT 1/16"=1'-0" 1 0 1 2 FT 1"=1'-0"
			3	8/7/96		RECORD DWG REVISIONS	

CITY OF TAMPA, FLORIDA
HOOKERS POINT WASTEWATER TREATMENT PLANT
PLANT EXPANSION
PHASE I DIVISION 5H3B
STANDBY POWER AND SLUDGE STORAGE FACILITIES

STANDBY POWER FACILITY
ARCHITECTURAL
ROOF PLAN

PROJ NO. 202G
DWG TA3
SHEET
DATE DECEMBER 1991 REV 3

5H3B_0TA-003

FILE: H3B-TA03 SCALE: 1:1 09/09, 1996 at 08:52 -- *13_d4h (Hardware Lock)*

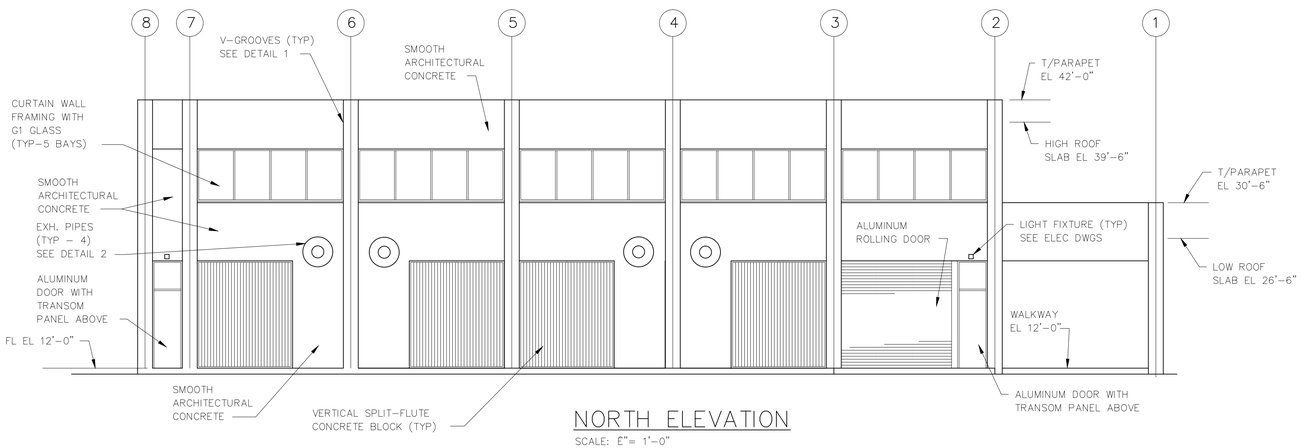

NORTH ELEVATION

SCALE: £"= 1'-0"

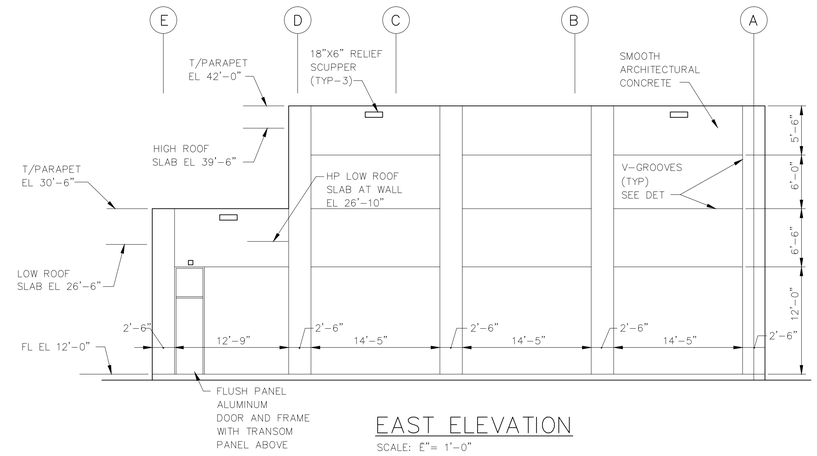

EAST ELEVATION

SCALE: £"= 1'-0"

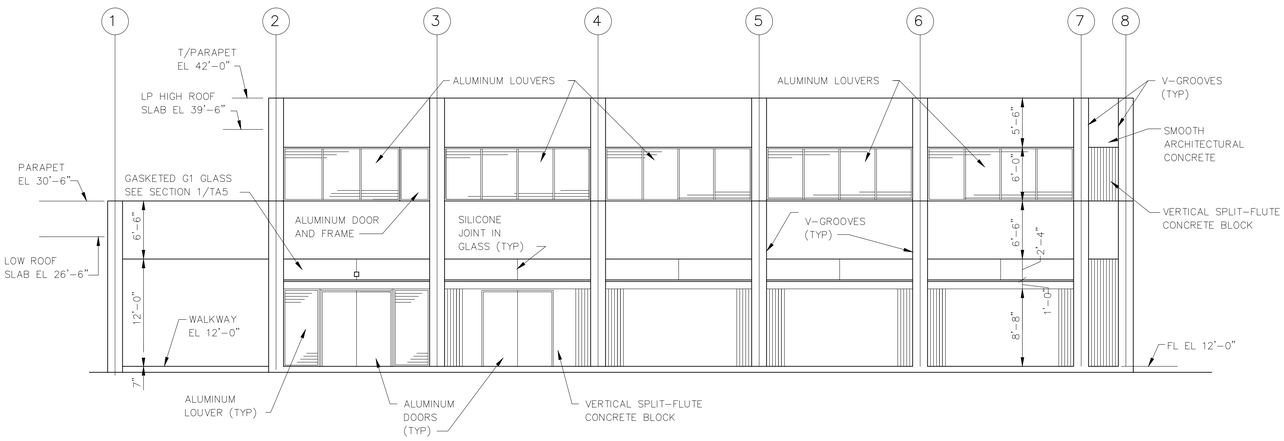

SOUTH ELEVATION

SCALE: £"= 1'-0"

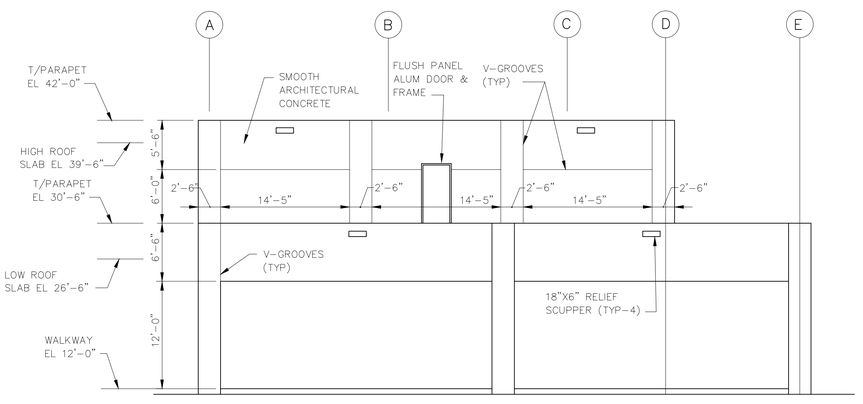

WEST ELEVATION

SCALE: £"= 1'-0"

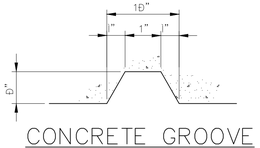

CONCRETE GROOVE DETAIL 1

NOT TO SCALE

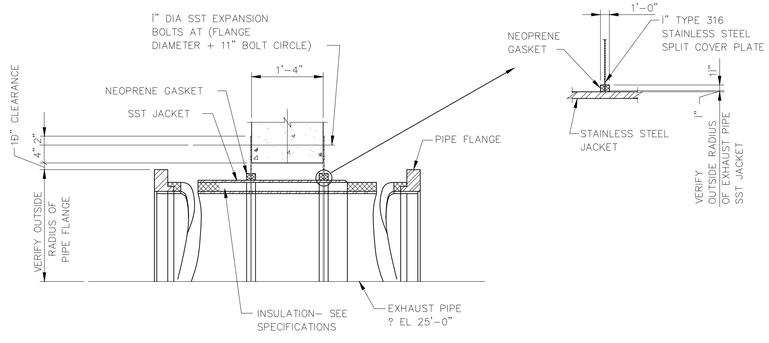

SECTION 3

SCALE: 0"=1'-0"

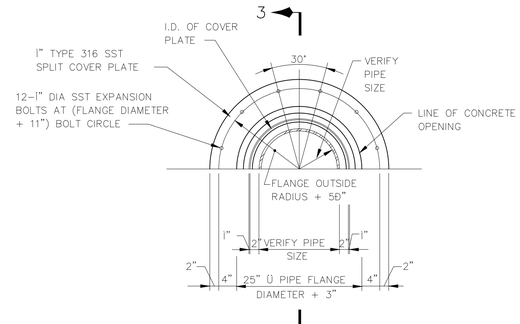

DETAIL 2

SCALE: 0"=1'-0"

RECORD DRAWING

THIS RECORD DRAWING IS NOT WARRANTED BUT IS BELIEVED TO REPRESENT CONDITIONS UPON COMPLETION OF CONSTRUCTION WITHIN REASONABLE TOLERANCES, BASED UPON THE INFORMATION FURNISHED TO THE ENGINEER PERTAINING TO CHANGES MADE DURING CONSTRUCTION.

GREELEY AND HANSEN
ENGINEERS
1715 NORTH WESTSHORE BOULEVARD
TAMPA, FLORIDA 33607-4135

DESIGNED TGT
DRAWN PAE
CHECKED CDS

APPROVED _____ DATE _____
_____ DATE _____
GREELEY AND HANSEN, ENGINEERS

NO.	DATE	APPD	REVISION
3	8/9/96		RECORD DWG REVISIONS

SCALE
8 0 8 16 FT
1/8"=1'-0"

CITY OF TAMPA, FLORIDA
HOOKERS POINT WASTEWATER TREATMENT PLANT
PLANT EXPANSION
PHASE I DIVISION 5H3B
STANDBY POWER AND SLUDGE STORAGE FACILITIES

STANDBY POWER FACILITY
ARCHITECTURAL
ELEVATIONS

PROJ NO. 202G
DWG TA4
SHEET
DATE DECEMBER 1991 REV 3

5H3B_0TA-004

FILE: H3B-TA04.SCA[E=1.96,09/09,1996,at 09:03 — "13.ath (Insurance Lock)"

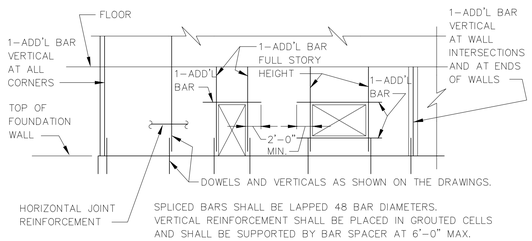

SPLICED BARS SHALL BE LAPPED 48 BAR DIAMETERS.
VERTICAL REINFORCEMENT SHALL BE PLACED IN GROUTED CELLS AND SHALL BE SUPPORTED BY BAR SPACER AT 6'-0" MAX.
SEE PLANS AND SECTIONS FOR C.M.U. WALLS AND PARTITIONS.
MINIMUM f'm = 1400 PSI.

TYPICAL DETAILS OF REINFORCEMENT FOR C.M.U. WALLS

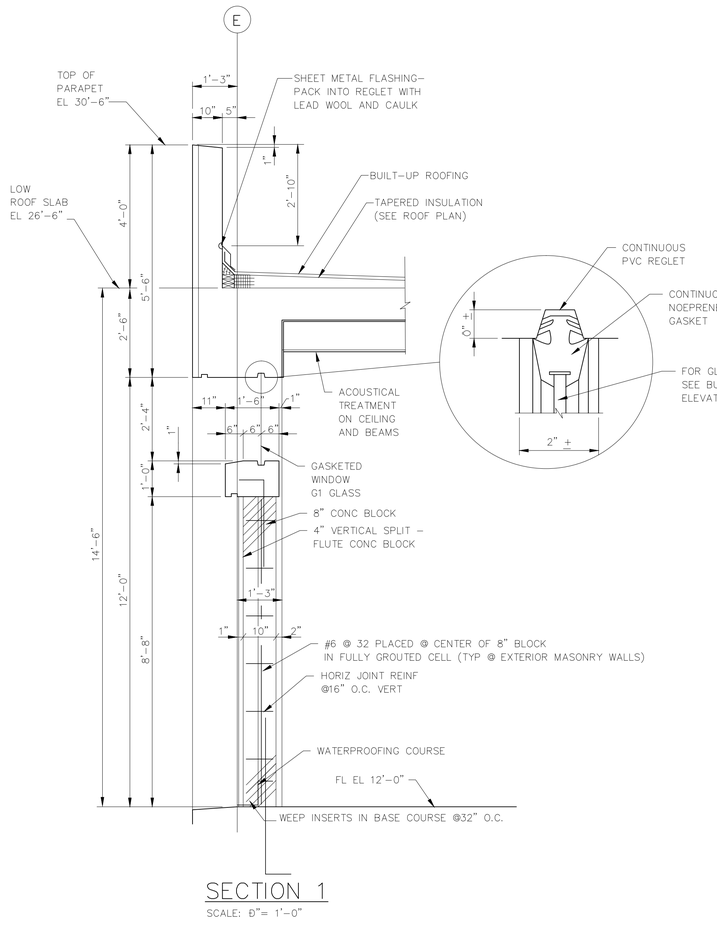

SECTION 1

SCALE: Ð"= 1'-0"

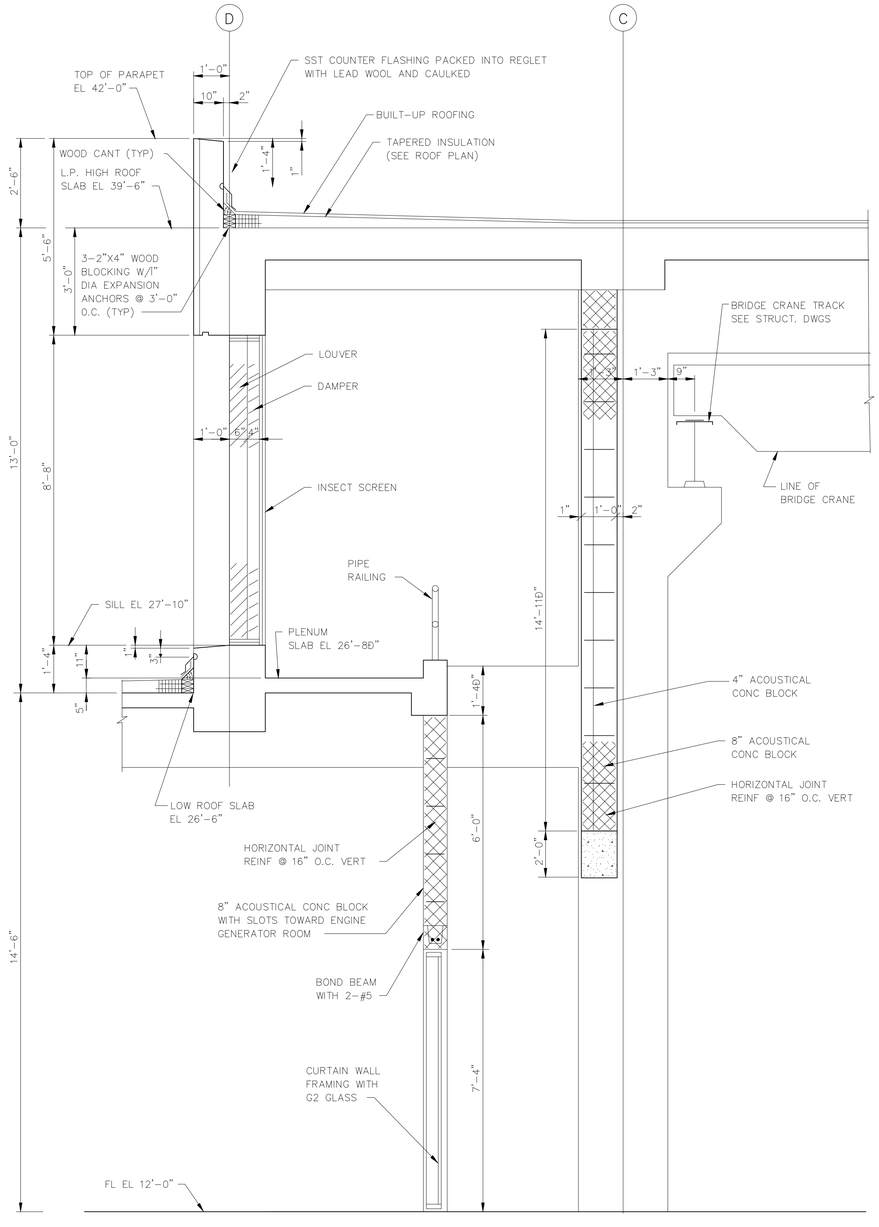

SECTION 2

SCALE: Ð"= 1'-0"

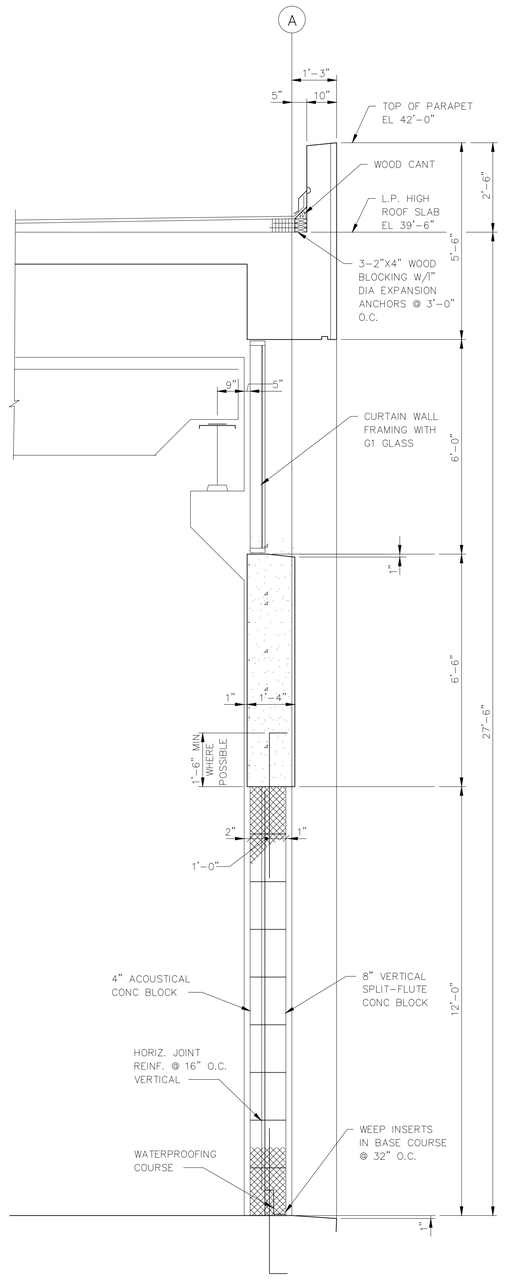

SECTION 3

SCALE: Ð"= 1'-0"

RECORD DRAWING

THIS RECORD DRAWING IS NOT WARRANTED BUT IS BELIEVED TO REPRESENT CONDITIONS UPON COMPLETION OF CONSTRUCTION WITHIN REASONABLE TOLERANCES, BASED UPON THE INFORMATION FURNISHED TO THE ENGINEER PERTAINING TO CHANGES MADE DURING CONSTRUCTION.

FILE: H3B-TA05 SCALE: 1:24 09/17, 1998 at 08:20 -- *12_ssh (Hardware Lock)*

GREELEY AND HANSEN ENGINEERS 1715 NORTH WESTSHORE BOULEVARD TAMPA, FLORIDA 33607-4135	DESIGNED TGT DRAWN PAE CHECKED CDS	APPROVED _____ DATE _____ _____ DATE _____ GREELEY AND HANSEN, ENGINEERS	NO.	DATE	APPD.	REVISION	SCALE 1 0 1 2 3 4 5 FT 1/2"=1'-0"
			2	8/28/96		RECORD DWG REVISIONS	

CITY OF TAMPA, FLORIDA
HOOKERS POINT WASTEWATER TREATMENT PLANT
PLANT EXPANSION
PHASE I DIVISION 5H3B
STANDBY POWER AND SLUDGE STORAGE FACILITIES

STANDBY POWER FACILITY
ARCHITECTURAL
SECTIONS

See Supplemental Drawing SD-34

PROJ NO. 202G
DWG TA5
SHEET
DATE DECEMBER 1991 REV 2

5H3B_0TA-005

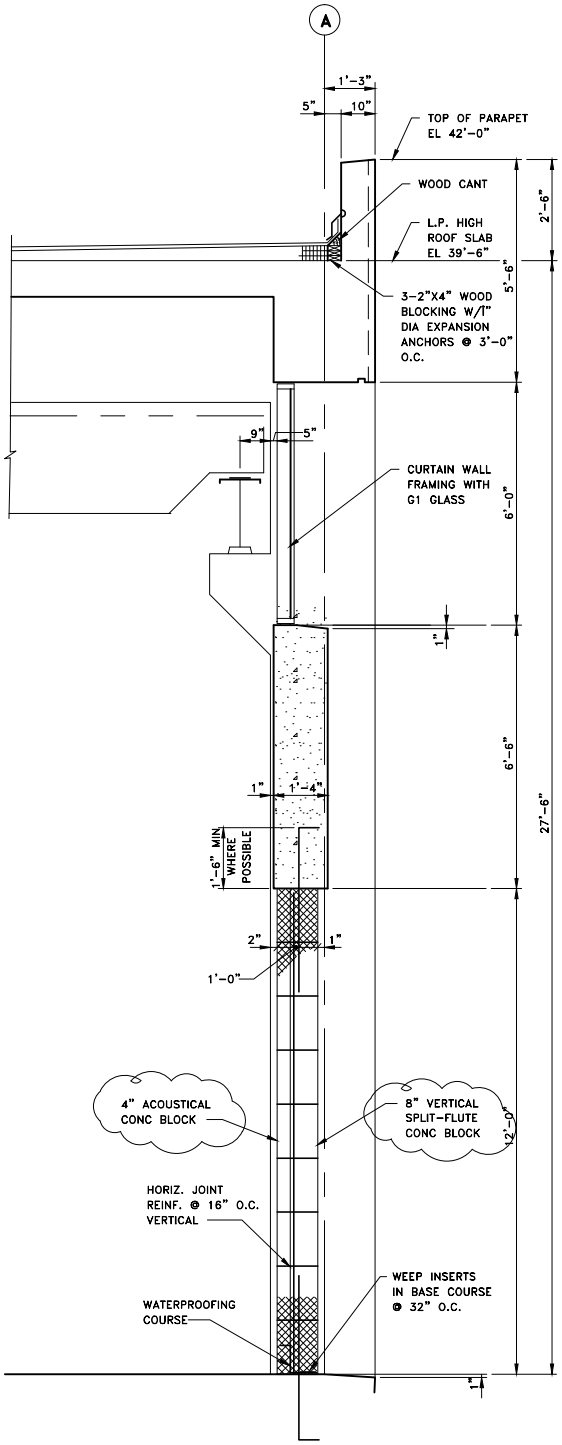

SECTION 3

NOT TO SCALE

REVISES DRAWING TA5

DES TGT	CKD CDS					H.P.W.W.T.P.
DR ROO	APPD					DIVISION 5H3B
GREELEY AND HANSEN ENGINEERS CHICAGO, ILLINOIS 60606						SD-34
		NO.	DATE	APPD	REVISION	DATE DEC 1993 NO. 0

FILE: H:\AC\5H3B\SD\H3BESD34 SCALE: 1:11 12/10, 1993 at 10:36 *R11 c2*

5H3B_0TA-005A

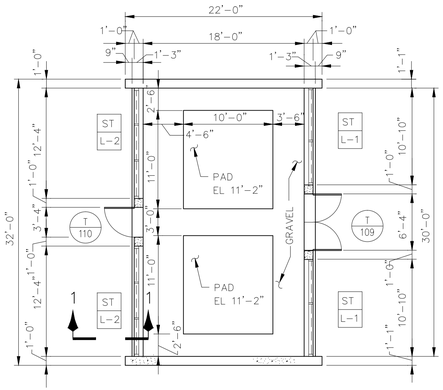

PLAN AT GRADE

SCALE: 1": 1'-0"

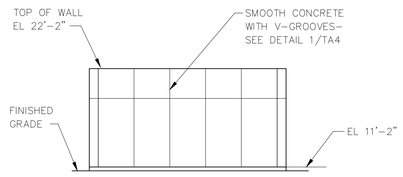

NORTH/SOUTH ELEVATION

SCALE: 1": 1'-0"

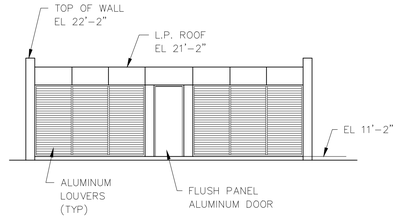

WEST ELEVATION

SCALE: 1": 1'-0"

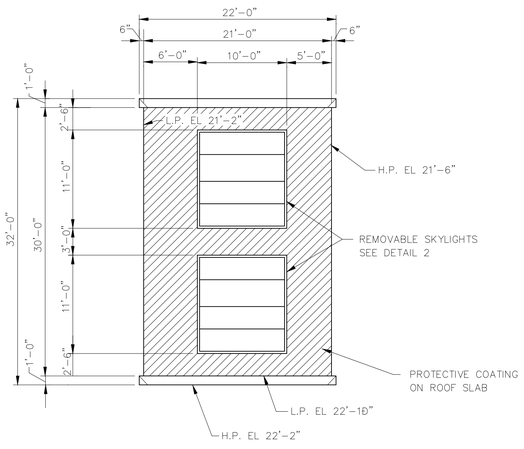

ROOF PLAN

SCALE: 1": 1'-0"

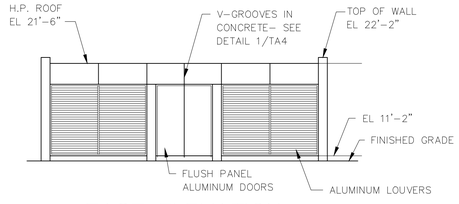

EAST ELEVATION

SCALE: 1": 1'-0"

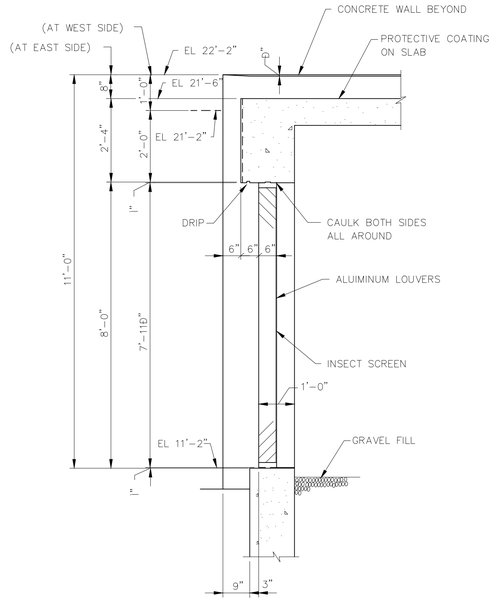

SECTION 1

SCALE: Ð": 1'-0"

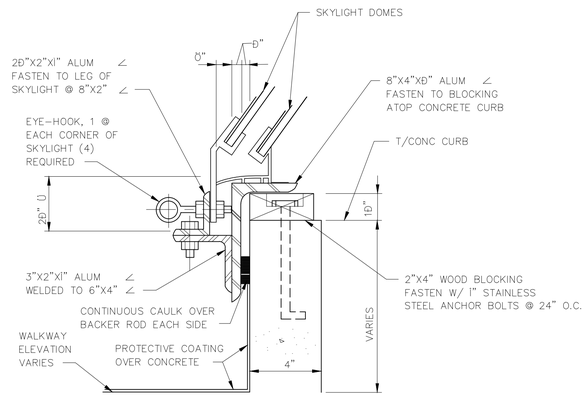

DETAIL 2

SCALE: 3" = 1'-0"

RECORD DRAWING

THIS RECORD DRAWING IS NOT WARRANTED BUT IS BELIEVED TO REPRESENT CONDITIONS UPON COMPLETION OF CONSTRUCTION WITHIN REASONABLE TOLERANCES, BASED UPON THE INFORMATION FURNISHED TO THE ENGINEER PERTAINING TO CHANGES MADE DURING CONSTRUCTION.

GREELEY AND HANSEN
ENGINEERS
1715 NORTH WESTSHORE BOULEVARD
TAMPA, FLORIDA 33607-4135

DESIGNED	TGT
DRAWN	ROO
CHECKED	CDS

APPROVED _____ DATE _____

_____ DATE _____

GREELEY AND HANSEN, ENGINEERS

NO.	DATE	APPD	REVISION
3	8/12/96		RECORD DWG REVISIONS

SCALE
8 0 8 16 FT 1/8"=1'-0"
1 0 1 2 3 4 5 FT 1/2"=1'-0"
0 4 8 12 IN. 3"=1'-0"

CITY OF TAMPA, FLORIDA
HOOKERS POINT WASTEWATER TREATMENT PLANT
PLANT EXPANSION
PHASE I DIVISION 5H3B
STANDBY POWER AND SLUDGE STORAGE FACILITIES

TRANSFORMER YARD
ARCHITECTURAL
PLANS, ELEVATIONS AND SECTIONS

PROJ NO. 202G
DWG TA6
SHEET
DATE DECEMBER 1991 REV 3

5H3B_0TA-006

FILE: H3B-TA06 SCALE: 1:96 09/09, 1996 at 09:16 -- *13_cah (Hardware Lock)*

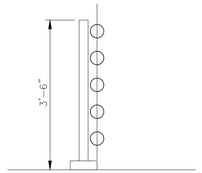

SECTION A
NOT TO SCALE

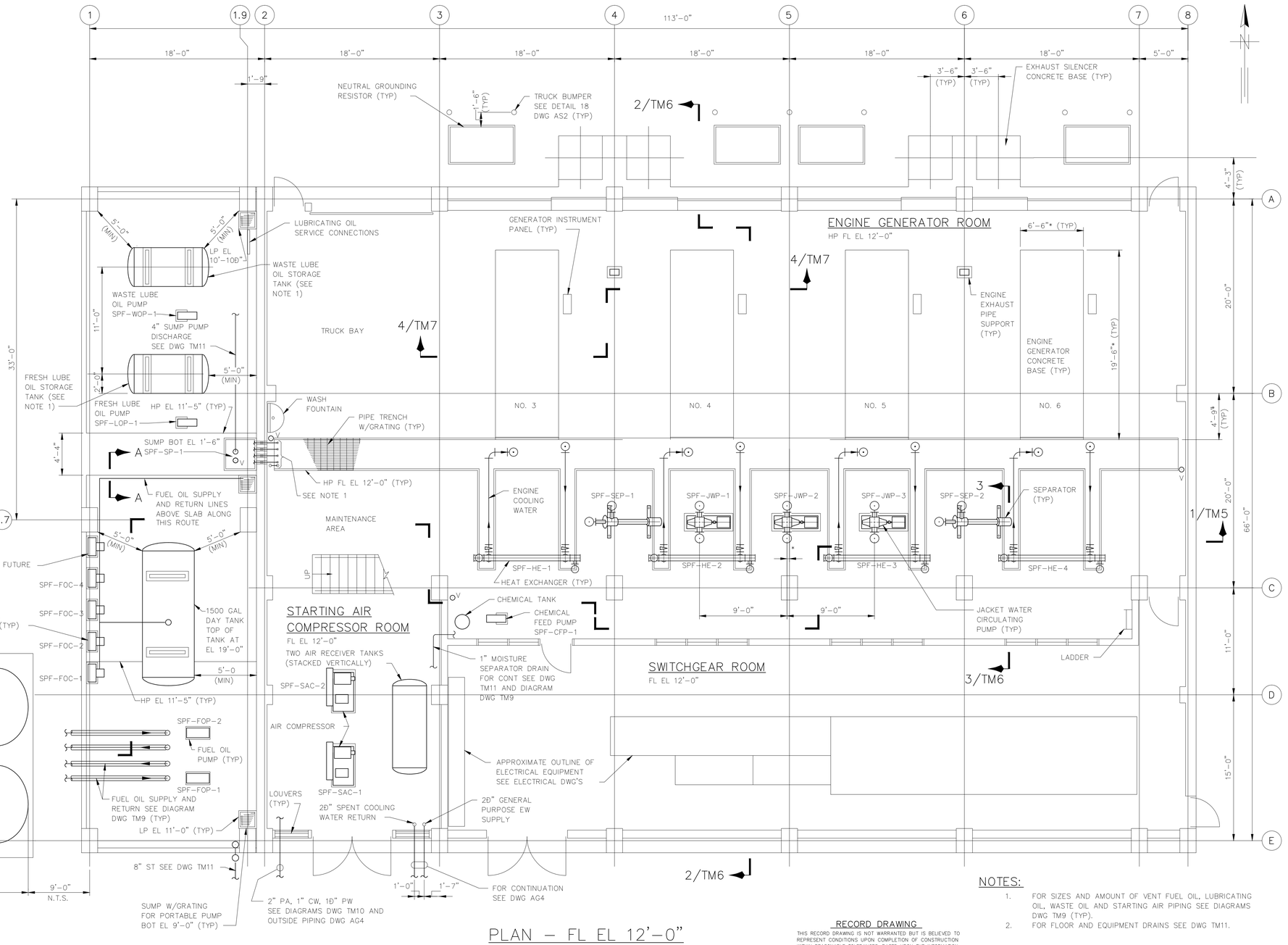

PLAN – FL EL 12'-0"
SCALE: 1"=1'-0"

NOTES:

1. FOR SIZES AND AMOUNT OF VENT FUEL OIL, LUBRICATING OIL, WASTE OIL AND STARTING AIR PIPING SEE DIAGRAMS DWG TM9 (TYP).
2. FOR FLOOR AND EQUIPMENT DRAINS SEE DWG TM11.

RECORD DRAWING

THIS RECORD DRAWING IS NOT WARRANTED BUT IS BELIEVED TO REPRESENT CONDITIONS UPON COMPLETION OF CONSTRUCTION WITHIN REASONABLE TOLERANCES, BASED UPON THE INFORMATION FURNISHED TO THE ENGINEER PERTAINING TO CHANGES MADE DURING CONSTRUCTION.

FILE: H3B-TM01 SCALE: 1:64 09/17, 1998 at 07:40 -- *13.ctb (Hardware Lock)*

GREELEY AND HANSEN
ENGINEERS
1715 NORTH WESTSHORE BOULEVARD
TAMPA, FLORIDA 33607-4135

DESIGNED SFS, RPN
DRAWN RPN
CHECKED JRP

APPROVED _____ DATE _____
_____ DATE _____
GREELEY AND HANSEN, ENGINEERS

NO.	DATE	APPD	REVISION
4	8/14/96		RECORD DWG REVISIONS

SCALE
4 0 4 8 12 FT
3/16"=1'-0"

CITY OF TAMPA, FLORIDA
HOOKERS POINT WASTEWATER TREATMENT PLANT
PLANT EXPANSION
PHASE I DIVISION 5H3B
STANDBY POWER AND SLUDGE STORAGE FACILITIES

STANDBY POWER FACILITY
MECHANICAL
PLAN – FL EL 12'-0"

See Supplemental Drawing SD-5

PROJ NO. 202G
DWG TM1
SHEET
DATE DECEMBER 1991 REV 4

5H3B_0TM-001

SECTION A
NOT TO SCALE

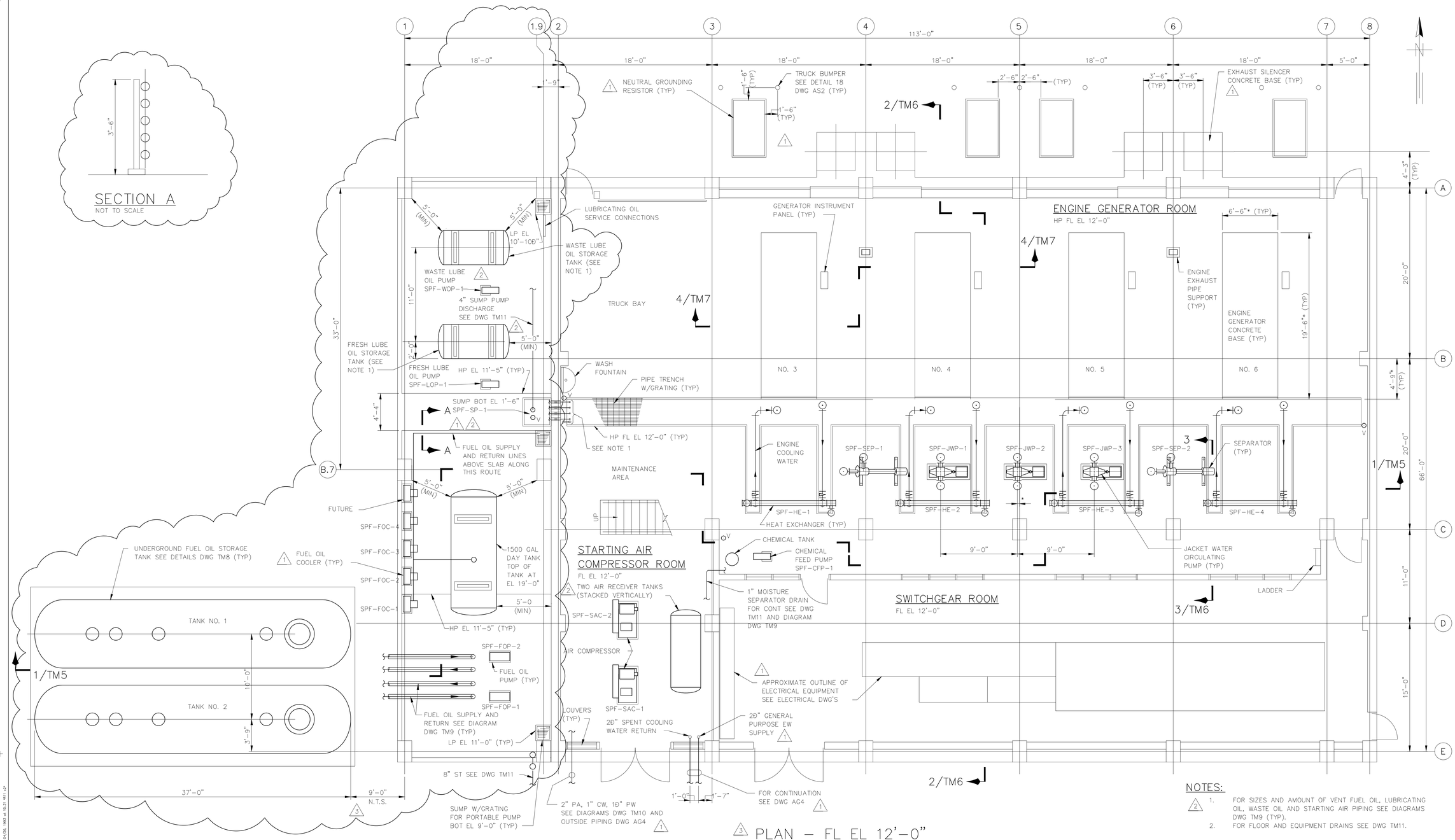

NOTES:

2 1. FOR SIZES AND AMOUNT OF VENT FUEL OIL, LUBRICATING OIL, WASTE OIL AND STARTING AIR PIPING SEE DIAGRAMS DWG TM9 (TYP).
2. FOR FLOOR AND EQUIPMENT DRAINS SEE DWG TM11.

3 PLAN – FL EL 12'-0"
SCALE: 1/8"=1'-0"

REVISES DWG TM1

GREELEY AND HANSEN
ENGINEERS
4350 WEST CYPRESS STREET
TAMPA, FLORIDA 33607-4135

DESIGNED	SFS RPN
DRAWN	RPN
CHECKED	JRP

APPROVED _____ DATE _____
_____ DATE _____
GREELEY AND HANSEN, ENGINEERS

NO.	DATE	APPD	REVISION
3	4/12/93	DCH	FIRE MARSHAL'S COMMENTS
2	8/04/92	DCH	REVISED PER ADD NO 2
1	2/28/92	JRP	REVISED N WALL & MISC

SCALE
4 0 4 8 12 FT
3/16"=1'-0"

CITY OF TAMPA, FLORIDA
HOOKERS POINT WASTEWATER TREATMENT PLANT
PLANT EXPANSION
PHASE I DIVISION 5H3B
STANDBY POWER AND SLUDGE STORAGE FACILITIES

STANDBY POWER FACILITY
MECHANICAL
PLAN – FL EL 12'-0"

PROJ NO.	202G
DWG	SD-5
SHEET	
DATE	DECEMBER 1991
REV	3

5H3B_0TM-001A

FILE: H:\ACSAVE\DEVELOPED\5H3B000.DGN SCALE: 1:48 04/06, 1993 at 10:31 AM1 JP

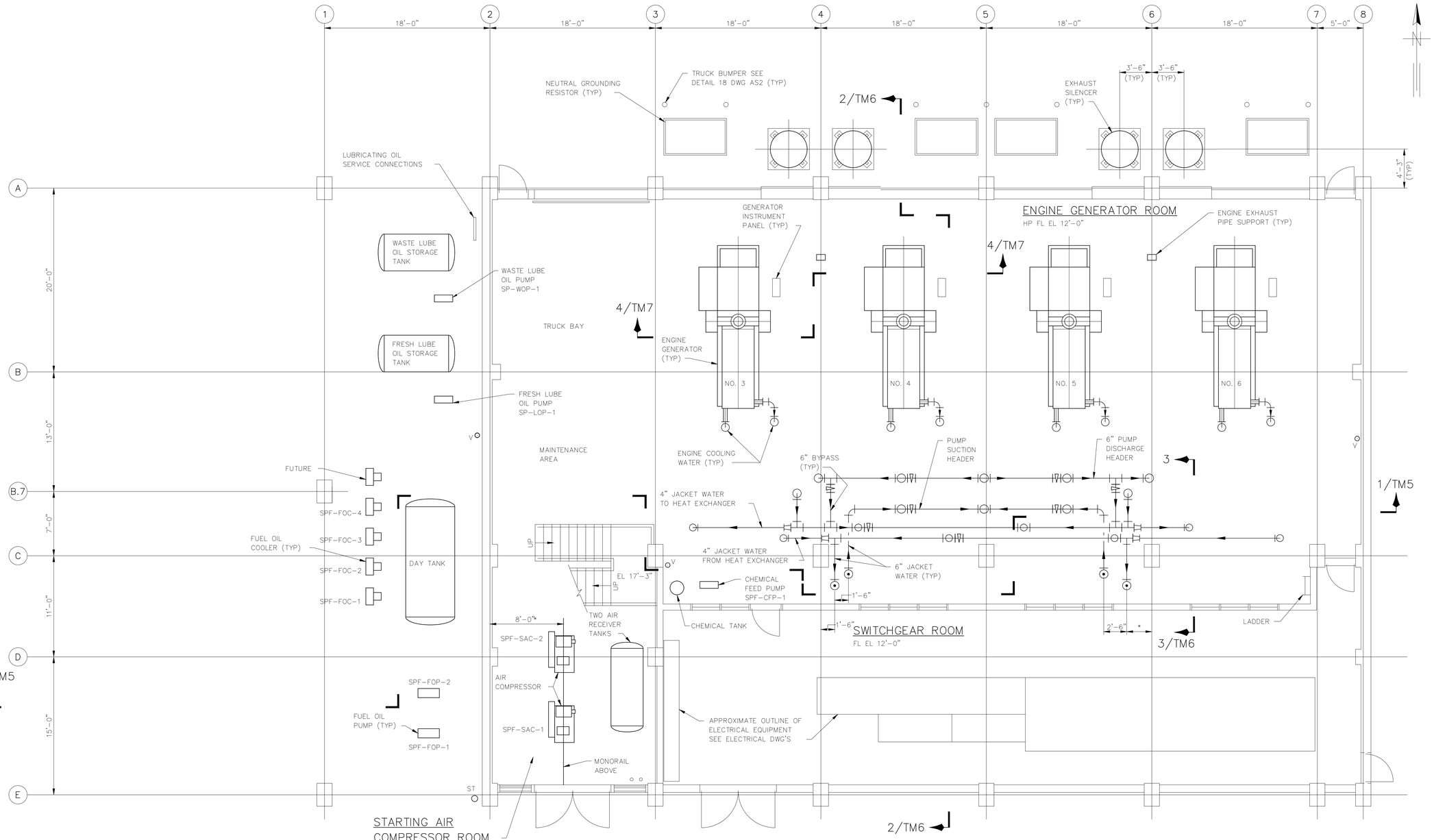

PLAN AT EL 21'-0"

SCALE: 1/8"=1'-0"

NOTE:

FOR ELEVATIONS OF PIPING SHOWN IN PLAN REFER TO SECTIONAL VIEWS.

RECORD DRAWING

THIS RECORD DRAWING IS NOT WARRANTED BUT IS BELIEVED TO REPRESENT CONDITIONS UPON COMPLETION OF CONSTRUCTION WITHIN REASONABLE TOLERANCES, BASED UPON THE INFORMATION FURNISHED TO THE ENGINEER PERTAINING TO CHANGES MADE DURING CONSTRUCTION.

GREELEY AND HANSEN
ENGINEERS
1715 NORTH WESTSHORE BOULEVARD
TAMPA, FLORIDA 33607-4135

DESIGNED	SFS, RPN
DRAWN	RPN
CHECKED	JRP

APPROVED _____ DATE _____

_____ DATE _____
GREELEY AND HANSEN, ENGINEERS

NO.	DATE	APPD	REVISION
2	8/14/96		RECORD DWG REVISIONS

SCALE
4 0 4 8 12 FT
3/16"=1'-0"

CITY OF TAMPA, FLORIDA
HOOKERS POINT WASTEWATER TREATMENT PLANT
PLANT EXPANSION
PHASE I DIVISION 5H3B
STANDBY POWER AND SLUDGE STORAGE FACILITIES

STANDBY POWER FACILITY
MECHANICAL
PLAN AT EL 21'-0"

PROJ NO.	202G
DWG	TM2
SHEET	
DATE	DECEMBER 1991
REV	2

5H3B_0TM-002

FILE: H3B-TM02 SCALE: 1:64 09/06, 1996 at 09:38 -- *13_c4h (Hardware Lock)* FILE: I:\APPS2 SCALE: 1:64 02/25, 1992 at 12:01 -- Wells 4 *R11 c2*

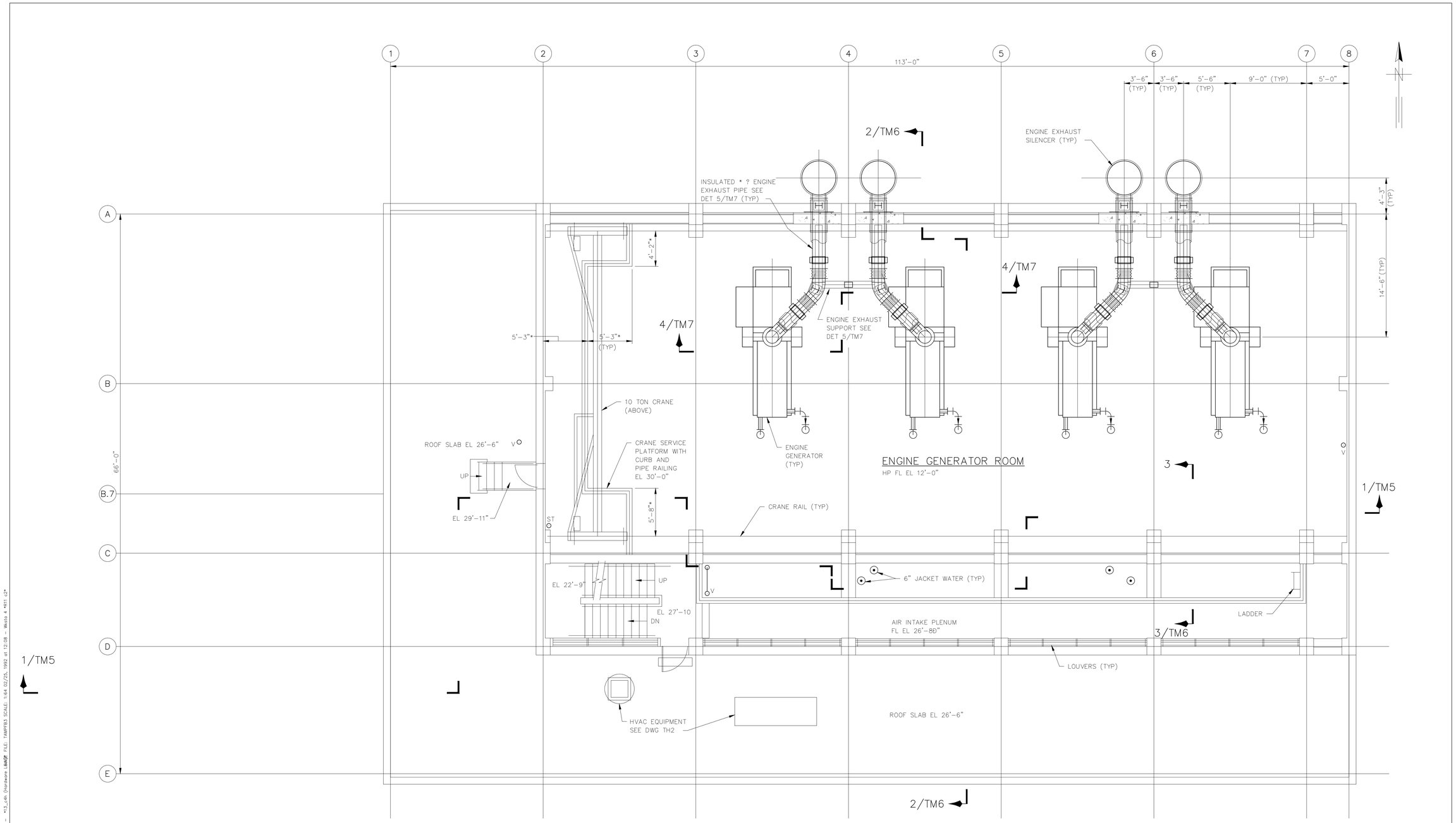

PLAN AT EL 33'-0"

SCALE: 1/8"=1'-0"

RECORD DRAWING

THIS RECORD DRAWING IS NOT WARRANTED BUT IS BELIEVED TO REPRESENT CONDITIONS UPON COMPLETION OF CONSTRUCTION WITHIN REASONABLE TOLERANCES, BASED UPON THE INFORMATION FURNISHED TO THE ENGINEER PERTAINING TO CHANGES MADE DURING CONSTRUCTION.

GREELEY AND HANSEN ENGINEERS 1715 NORTH WESTSHORE BOULEVARD TAMPA, FLORIDA 33607-4135	DESIGNED SFS, RPN DRAWN RPN CHECKED JRP	APPROVED DATE DATE GREELEY AND HANSEN, ENGINEERS	2 8/12/96 RECORD DWG REVISIONS NO. DATE APPD REVISION	SCALE 4 0 4 8 12 FT 3/16"=1'-0"	CITY OF TAMPA, FLORIDA HOOKERS POINT WASTEWATER TREATMENT PLANT PLANT EXPANSION PHASE I DIVISION 5H3B STANDBY POWER AND SLUDGE STORAGE FACILITIES	STANDBY POWER FACILITY MECHANICAL PLAN AT EL 33'-0"	PROJ NO. 202G DWG TM3 SHEET DATE DECEMBER 1991 REV 2

5H3B_0TM-003

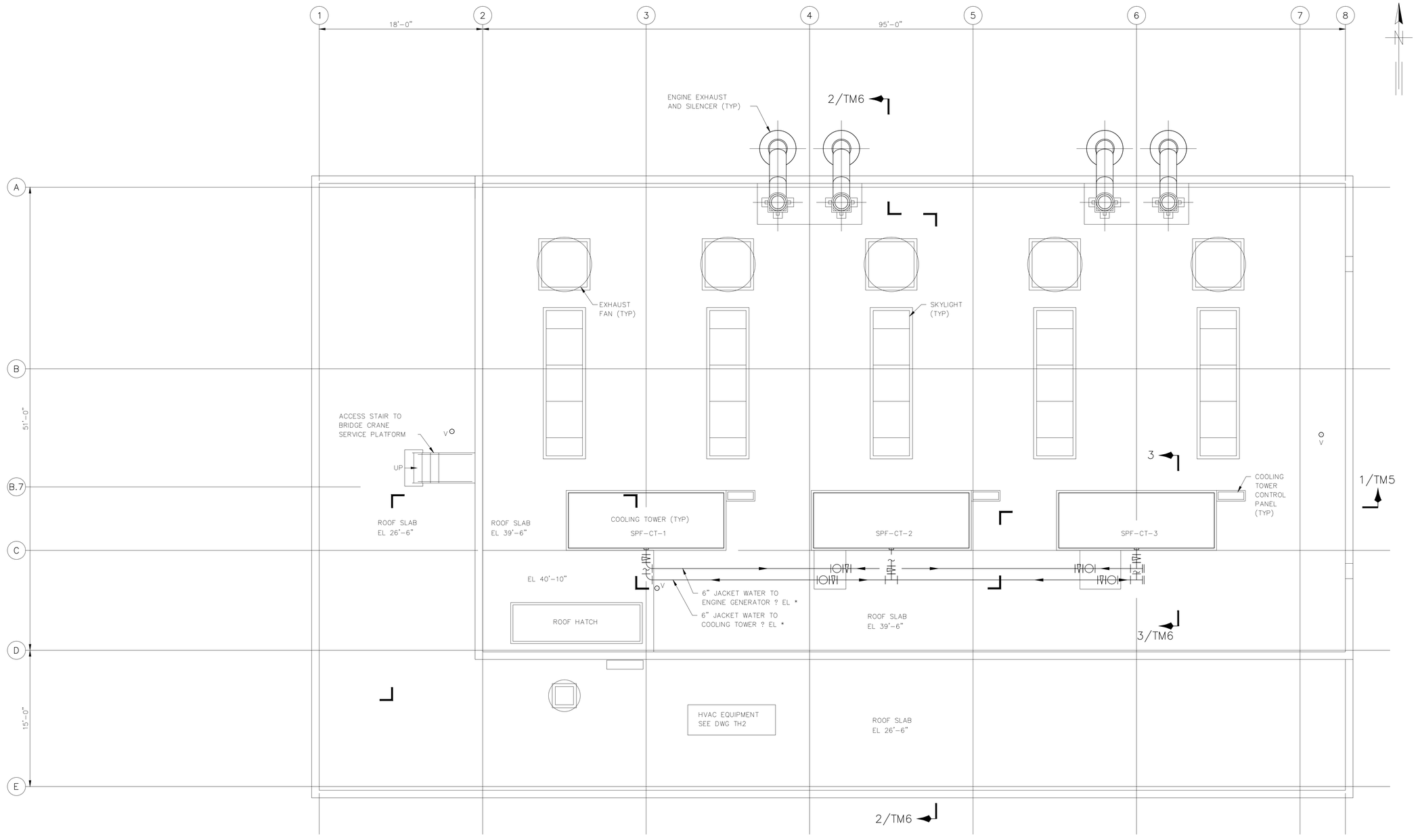

ROOF PLAN

SCALE: 1/8"=1'-0"

RECORD DRAWING

THIS RECORD DRAWING IS NOT WARRANTED BUT IS BELIEVED TO REPRESENT CONDITIONS UPON COMPLETION OF CONSTRUCTION WITHIN REASONABLE TOLERANCES, BASED UPON THE INFORMATION FURNISHED TO THE ENGINEER PERTAINING TO CHANGES MADE DURING CONSTRUCTION.

FILE: H3B-TM04 SCALE: 1:64 09/09, 1996 at 14:47 - *13_c4h (Hardware LBAR) FILE: TAMPFB4 SCALE: 1:64 02/25, 1992 at 10:39 - Wksta 4 *R11 c2*

GREELEY AND HANSEN ENGINEERS 1715 NORTH WESTSHORE BOULEVARD TAMPA, FLORIDA 33607-4135	DESIGNED SFS, RPN DRAWN RPN CHECKED JRP	APPROVED DATE DATE GREELEY AND HANSEN, ENGINEERS	2 8/9/96 RECORD DWG REVISIONS NO. DATE APPD REVISION	SCALE 4 0 4 8 12 FT 3/16"=1'-0"	CITY OF TAMPA, FLORIDA HOOKERS POINT WASTEWATER TREATMENT PLANT PLANT EXPANSION PHASE I DIVISION 5H3B STANDBY POWER AND SLUDGE STORAGE FACILITIES	STANBY POWER FACILITY MECHANICAL ROOF PLAN	PROJ NO. 202G DWG TM4 SHEET DATE DECEMBER 1991 REV 2

5H3B_0TM-004

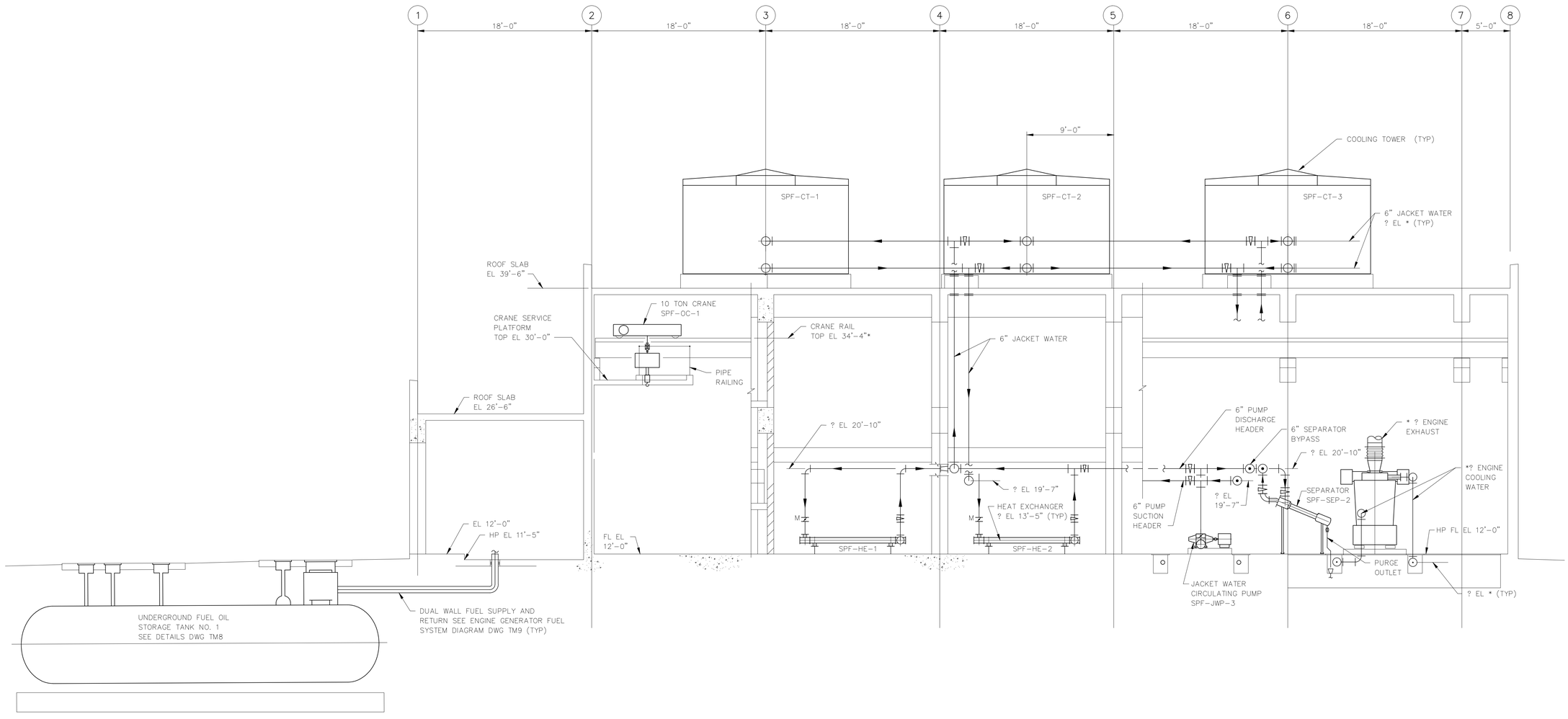

SECTION 1/TM1, 2, 3, 4

SCALE: 1/8"=1'-0"

RECORD DRAWING

THIS RECORD DRAWING IS NOT WARRANTED BUT IS BELIEVED TO REPRESENT CONDITIONS UPON COMPLETION OF CONSTRUCTION WITHIN REASONABLE TOLERANCES, BASED UPON THE INFORMATION FURNISHED TO THE ENGINEER PERTAINING TO CHANGES MADE DURING CONSTRUCTION.

FILE: H3B-TM05 SCALE: 1:64 09/09, 1996 at 10:29 - *13_c4h (Hardware Lock)*

GREELEY AND HANSEN ENGINEERS 1715 NORTH WESTSHORE BOULEVARD TAMPA, FLORIDA 33607-4135	DESIGNED SFS, RPN DRAWN RPN CHECKED JRP	APPROVED DATE DATE GREELEY AND HANSEN, ENGINEERS	2 8/12/96 RECORD DWG REVISIONS NO. DATE APPD REVISION	SCALE 4 0 4 8 12 FT 3/16"=1'-0"	CITY OF TAMPA, FLORIDA HOOKERS POINT WASTEWATER TREATMENT PLANT PLANT EXPANSION PHASE I DIVISION 5H3B STANDBY POWER AND SLUDGE STORAGE FACILITIES	STANDBY POWER FACILITY MECHANICAL SECTION	See Supplemental Drawing SD-6

PROJ NO. 202G
DWG TM5
SHEET
DATE DECEMBER 1991 REV 2

5H3B_0TM-005

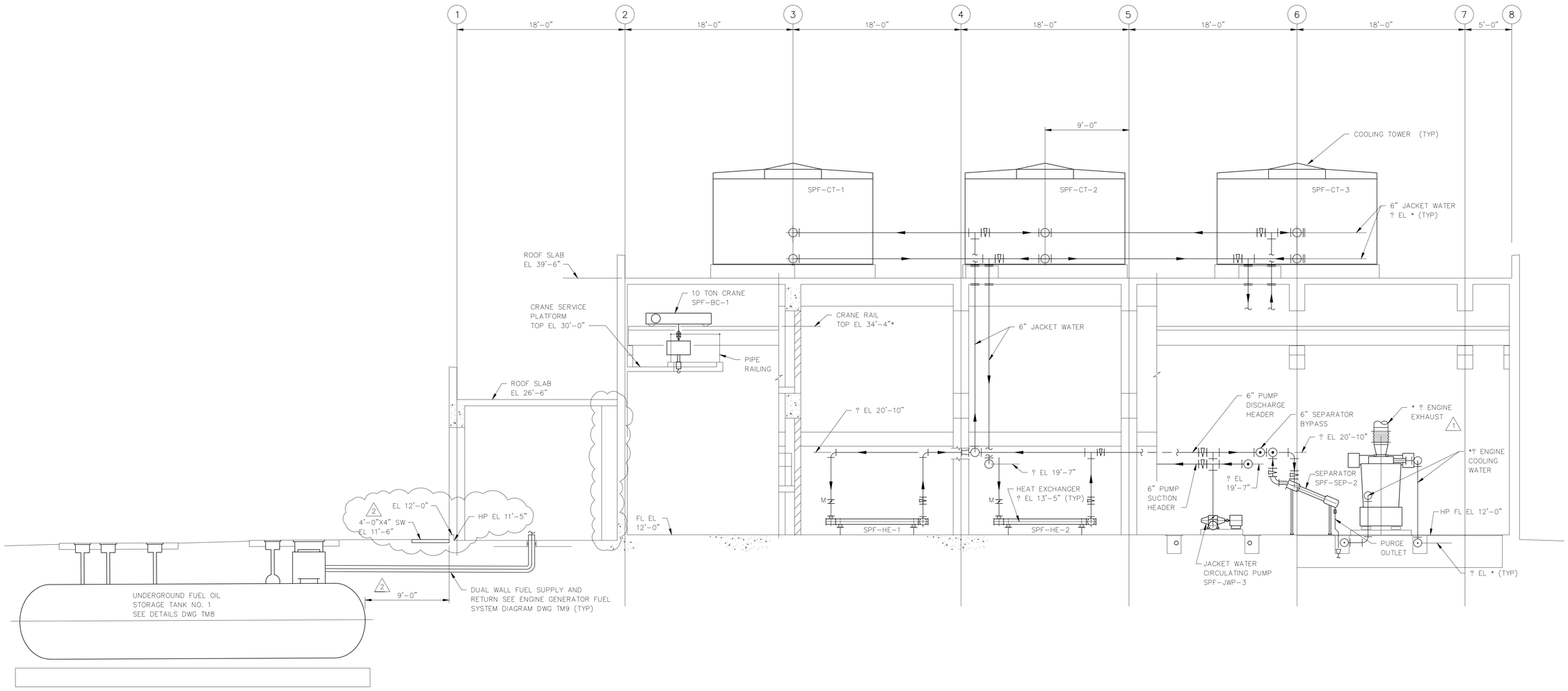

SECTION 1/TM1, 2, 3, 4

SCALE: 1/8"=1'-0"

REVISES DWG TM5

GREELEY AND HANSEN ENGINEERS 4350 WEST CYPRESS STREET TAMPA, FLORIDA 33607-4135	DESIGNED SFS RPN DRAWN RPN CHECKED JRP	APPROVED _____ DATE _____ _____ DATE _____ GREELEY AND HANSEN, ENGINEERS	2 4/13/93 DCH FIRE MARSHAL'S COMMENTS 1 2/28/92 JRP ADDED EQUIP NO'S NO. DATE APPD REVISION	SCALE 4 0 4 8 12 FT 3/16"=1'-0"

CITY OF TAMPA, FLORIDA
HOOKERS POINT WASTEWATER TREATMENT PLANT
PLANT EXPANSION
PHASE I DIVISION 5H3B
STANDBY POWER AND SLUDGE STORAGE FACILITIES

STANDBY POWER FACILITY
MECHANICAL
SECTION

PROJ NO. 202G
DWG SD-6
SHEET
DATE DECEMBER 1991 REV 2

5H3B_0TM-005A

FILE: H:\ACAD\WP350\HB0006 SCALE: 1:64 64/IN, 1993 at 09:44 PM 1'-0"

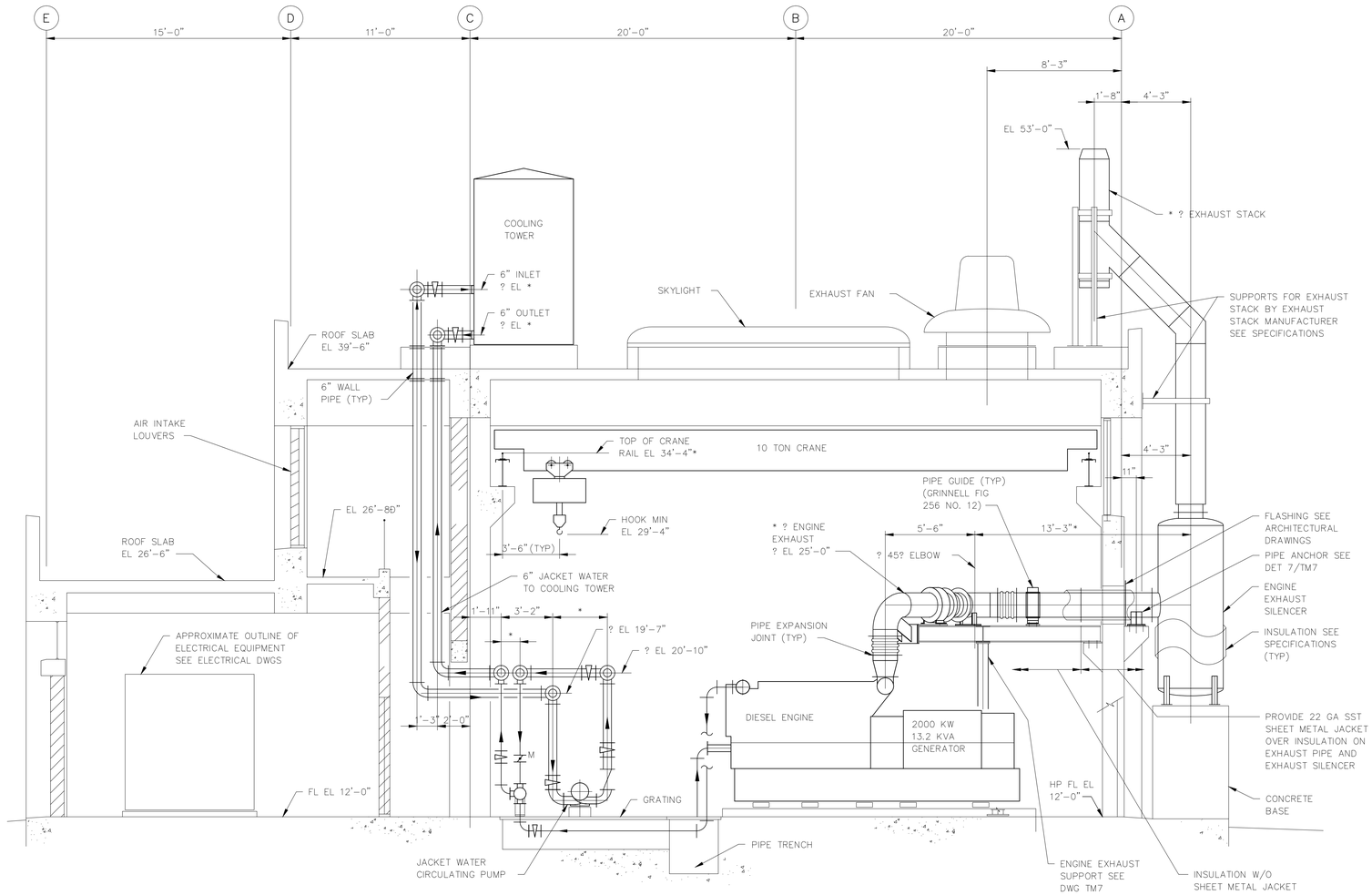

SECTION 2/TM1, 2, 3, 4

SCALE: 1"=1'-0"

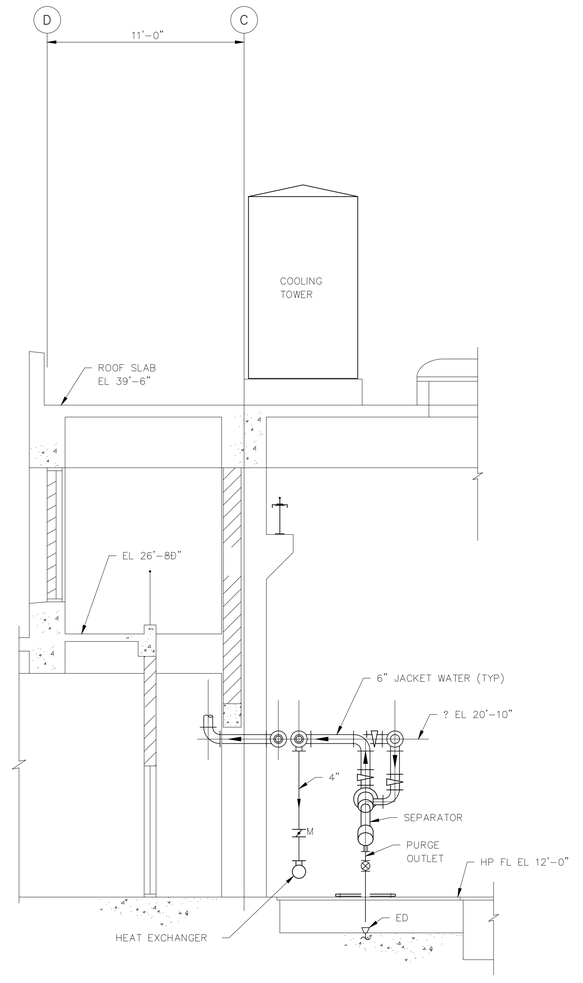

SECTION 3/TM1, 2, 3, 4

SCALE: 1"=1'-0"

RECORD DRAWING

THIS RECORD DRAWING IS NOT WARRANTED BUT IS BELIEVED TO REPRESENT CONDITIONS UPON COMPLETION OF CONSTRUCTION WITHIN REASONABLE TOLERANCES, BASED UPON THE INFORMATION FURNISHED TO THE ENGINEER PERTAINING TO CHANGES MADE DURING CONSTRUCTION.

FILE: H3B-TM06 SCALE: 1:48 09/09, 1996 at 10:32 - *13_cdh (Hardware Lock)*

GREELEY AND HANSEN
ENGINEERS
1715 NORTH WESTSHORE BOULEVARD
TAMPA, FLORIDA 33607-4135

DESIGNED SFS, RPN
DRAWN RPN
CHECKED JRP

APPROVED _____ DATE _____
_____ DATE _____
GREELEY AND HANSEN, ENGINEERS

NO.	DATE	APPD	REVISION
2	8/12/96		RECORD DWG REVISIONS

SCALE
4 0 4 8 FT
1/4"=1'-0"

CITY OF TAMPA, FLORIDA
HOOKERS POINT WASTEWATER TREATMENT PLANT
PLANT EXPANSION
PHASE I DIVISION 5H3B
STANDBY POWER AND SLUDGE STORAGE FACILITIES

STANDBY POWER FACILITY
MECHANICAL
SECTIONS

PROJ NO. 202G
DWG TM6
SHEET
DATE DECEMBER 1991 REV 2

5H3B_0TM-006

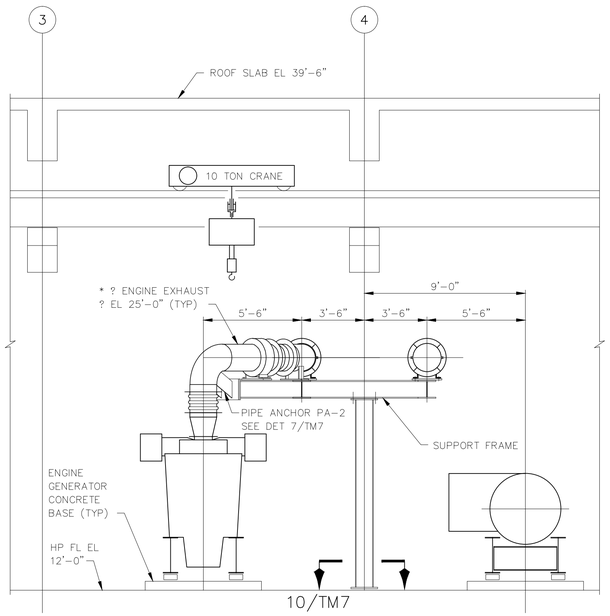

SECTION 4/TM3

SCALE: 1"=1'-0"

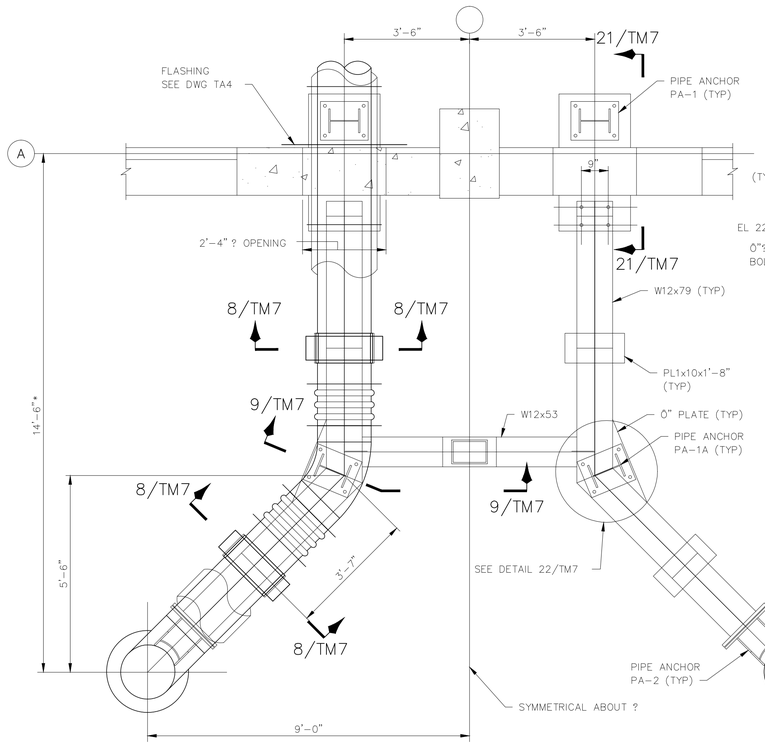

DETAIL 5/TM7

SCALE: Ø"=1'-0"

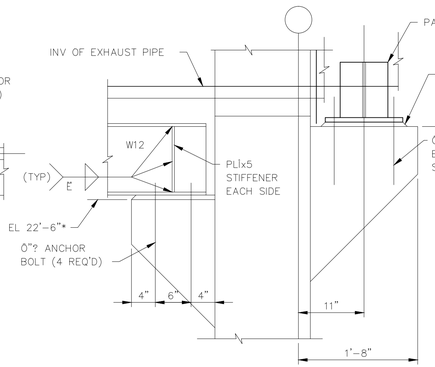

SECTION 21/TM7

SCALE: 1"=1'-0"
FOR CONCRETE BRACKET DETAIL SEE DWG TS1

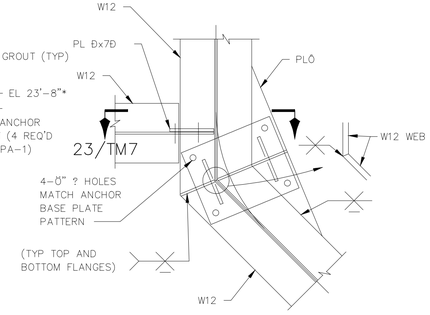

DETAIL 22/TM7

SCALE: 1"=1'-0"

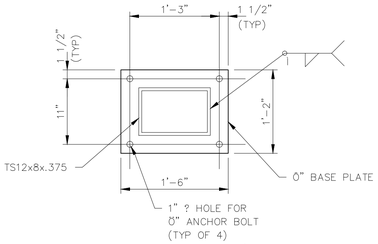

SECTION 10/TM7

SCALE: 1"=1'-0"

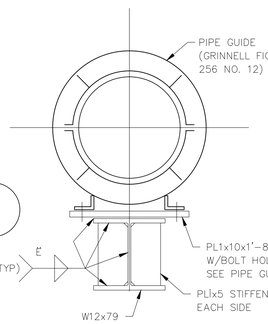

SECTION 8/TM7

SCALE: 1"=1'-0"

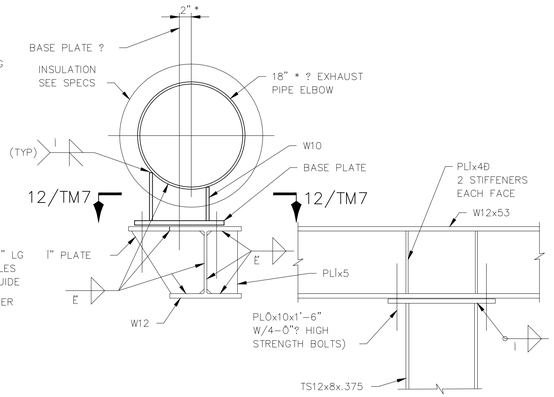

SECTION 9/TM7

SCALE: 1"=1'-0"

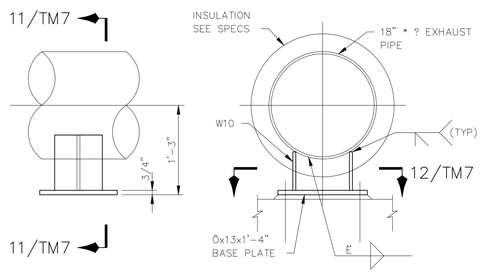

ELEVATION

SECTION 11/TM7

SECTION 12/TM7

DETAIL 6/TM7
PIPE ANCHOR PA-1

SCALE: 1"=1'-0"

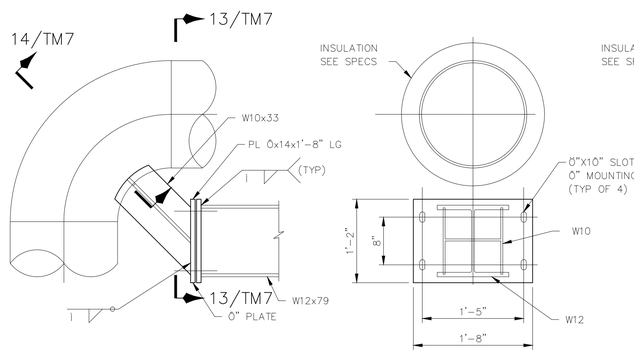

ELEVATION

SECTION 13/TM7

SECTION 14/TM7

SECTION 9/TM7

SCALE: 1"=1'-0"

DETAIL 7/TM7
PIPE ANCHOR PA-2

SCALE: 1"=1'-0"

RECORD DRAWING

THIS RECORD DRAWING IS NOT WARRANTED BUT IS BELIEVED TO REPRESENT CONDITIONS UPON COMPLETION OF CONSTRUCTION WITHIN REASONABLE TOLERANCES, BASED UPON THE INFORMATION FURNISHED TO THE ENGINEER PERTAINING TO CHANGES MADE DURING CONSTRUCTION.

NOTE:

THE DETAILS SHOWN ARE BASED ON 18"? EXHAUST PIPE. DETAILS AND ELEVATIONS MAY CHANGE IF EXHAUST PIPE SIZE OTHER THAN 18" IS USED. THE CONTRACTOR SHALL THEN SUBMIT REVISED DETAILS FOR APPROVAL.

FILE: H3B-TM07 SCALE: 1:48 09/09, 1996 at 11:58 -- *13_24h (Hardware Lock)*

GREELEY AND HANSEN
ENGINEERS
1715 NORTH WESTSHORE BOULEVARD
TAMPA, FLORIDA 33607-4135

DESIGNED RPN
DRAWN RPN
CHECKED JRP

APPROVED _____ DATE _____
_____ DATE _____
GREELEY AND HANSEN, ENGINEERS

NO.	DATE	APPD	REVISION
2	8/12/96		RECORD DWG REVISIONS

SCALE
4 0 4 8 FT 1/4"=1'-0"
1 0 1 2 3 4 5 FT 1/2"=1'-0"
1 0 1 2 FT 1"=1'-0"

CITY OF TAMPA, FLORIDA
HOOKERS POINT WASTEWATER TREATMENT PLANT
PLANT EXPANSION
PHASE I DIVISION 5H3B
STANDBY POWER AND SLUDGE STORAGE FACILITIES

STANDBY POWER FACILITY
MECHANICAL
PLAN, SECTIONS AND DETAILS

PROJ NO. 202G
DWG TM7
SHEET
DATE DECEMBER 1991 REV 2

5H3B_0TM-007

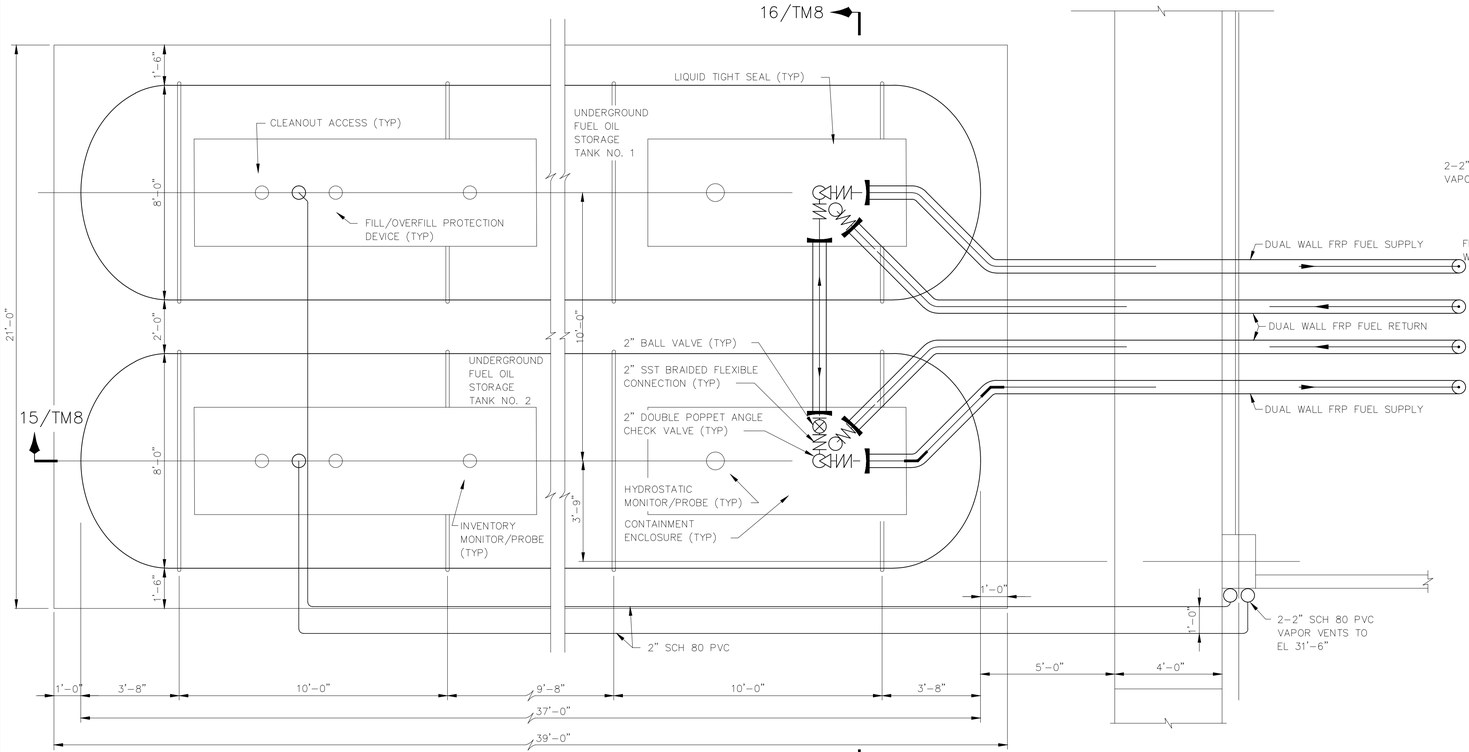

PLAN

SCALE: 1"=1'-0"

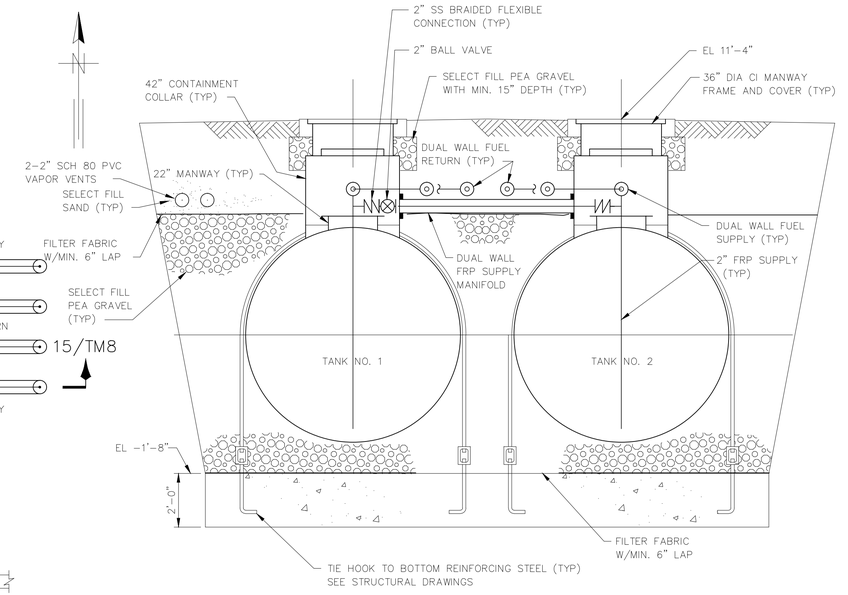

SECTION 16/TM8

SCALE: 1"=1'-0"

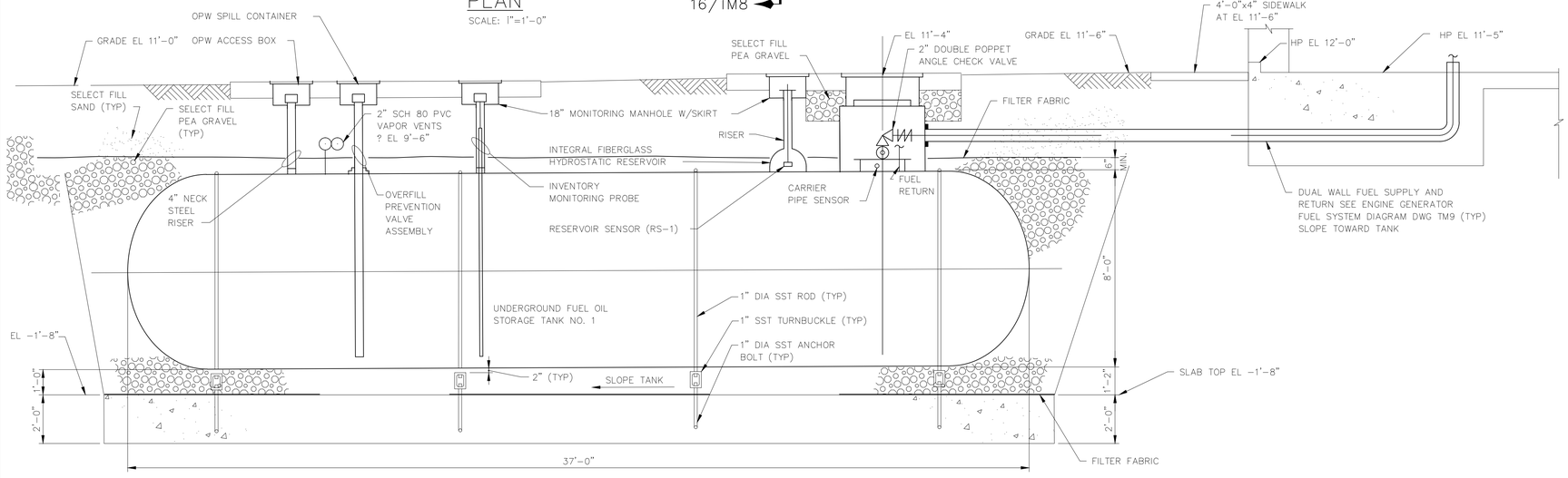

SECTION 15/TM8

SCALE: 1"=1'-0"

RECORD DRAWING

THIS RECORD DRAWING IS NOT WARRANTED BUT IS BELIEVED TO REPRESENT CONDITIONS UPON COMPLETION OF CONSTRUCTION WITHIN REASONABLE TOLERANCES, BASED UPON THE INFORMATION FURNISHED TO THE ENGINEER PERTAINING TO CHANGES MADE DURING CONSTRUCTION.

FILE: H3B-TM08 SCALE: 1:32 09/09, 1996 at 12:11 -- *13_24h (Hardware Lock)*

GREELEY AND HANSEN ENGINEERS 1715 NORTH WESTSHORE BOULEVARD TAMPA, FLORIDA 33607-4135	DESIGNED SFS DRAWN SK CHECKED JRP	APPROVED _____ DATE _____ DATE GREELEY AND HANSEN, ENGINEERS	NO.	DATE	APPD	REVISION	SCALE 1 0 1 2 3 4 5 6 7 FT 3/8"=1'-0"
			5	8/12/96		RECORD DWG REVISIONS	

CITY OF TAMPA, FLORIDA
HOOKERS POINT WASTEWATER TREATMENT PLANT
PLANT EXPANSION
PHASE I DIVISION 5H3B
STANDBY POWER AND SLUDGE STORAGE FACILITIES

STANDBY POWER FACILITY
MECHANICAL
FUEL OIL STORAGE TANKS – PLAN AND SECTIONS

See Supplemental Drawing SD-7

PROJ NO. 202G
DWG TM8
SHEET
DATE DECEMBER 1991 REV 5

5H3B_0TM-008

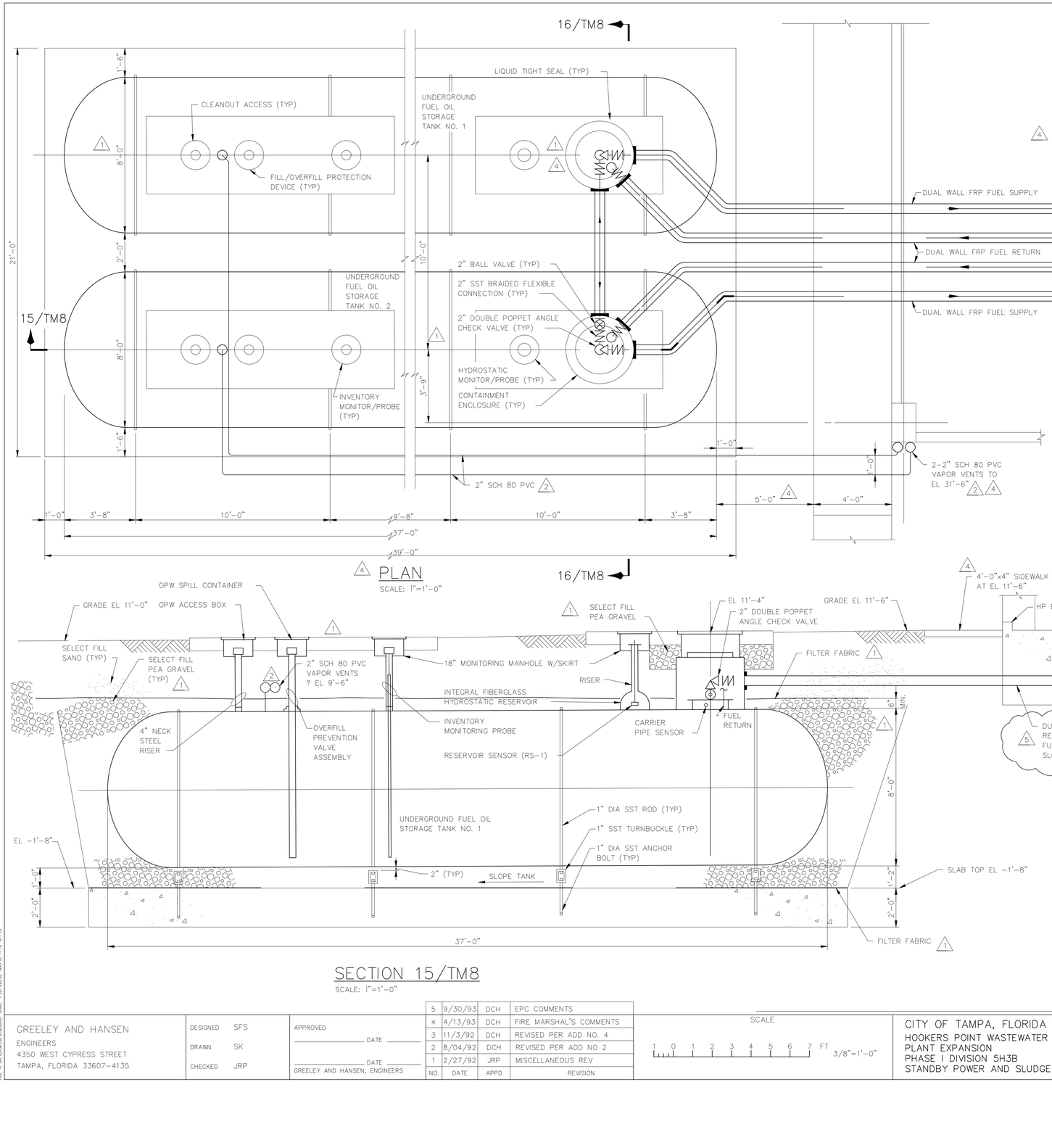

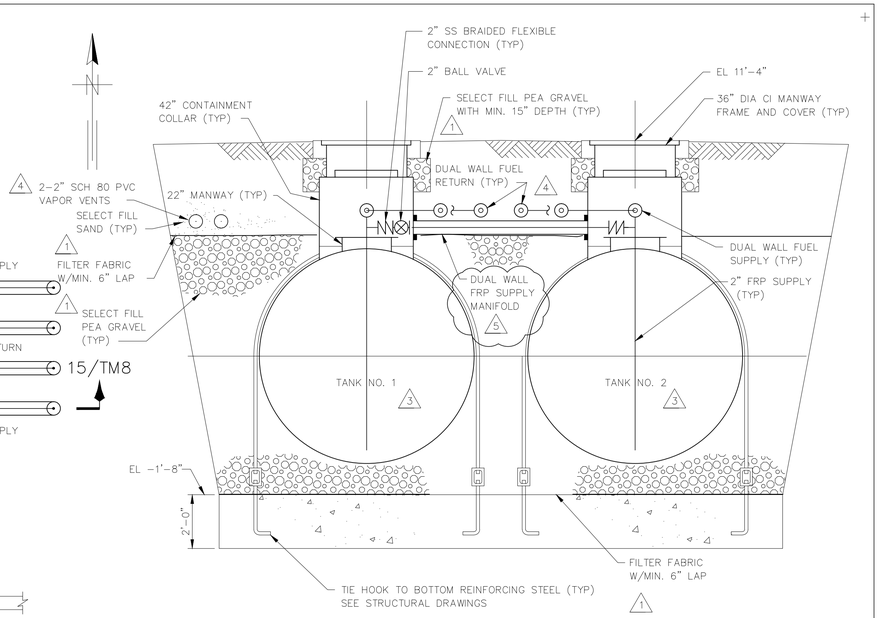

SECTION 16/TM8
SCALE: 1"=1'-0"

REVISES DWG TM8

NO.	DATE	APPD	REVISION
5	9/30/93	DCH	EPC COMMENTS
4	4/13/93	DCH	FIRE MARSHAL'S COMMENTS
3	11/3/92	DCH	REVISED PER ADD NO. 4
2	8/04/92	DCH	REVISED PER ADD NO 2
1	2/27/92	JRP	MISCELLANEOUS REV

GREELEY AND HANSEN
ENGINEERS
4350 WEST CYPRESS STREET
TAMPA, FLORIDA 33607-4135

DESIGNED SFS
DRAWN SK
CHECKED JRP

APPROVED _____ DATE _____
_____ DATE _____
GREELEY AND HANSEN, ENGINEERS

SCALE
1 0 1 2 3 4 5 6 7 FT
3/8"=1'-0"

CITY OF TAMPA, FLORIDA
HOOKERS POINT WASTEWATER TREATMENT PLANT
PLANT EXPANSION
PHASE I DIVISION 5H3B
STANDBY POWER AND SLUDGE STORAGE FACILITIES

STANDBY POWER FACILITY
MECHANICAL
FUEL OIL STORAGE TANKS – PLAN AND SECTIONS

PROJ NO. 202G
DWG SD-7
SHEET
DATE DECEMBER 1991 REV 5

5H3B_0TM-008A

FILE: N:\ACS\5H3B\VOL1\5B0007.DGN LAST: 1:32 09/30, 1993 pf 11:19 1993 pf

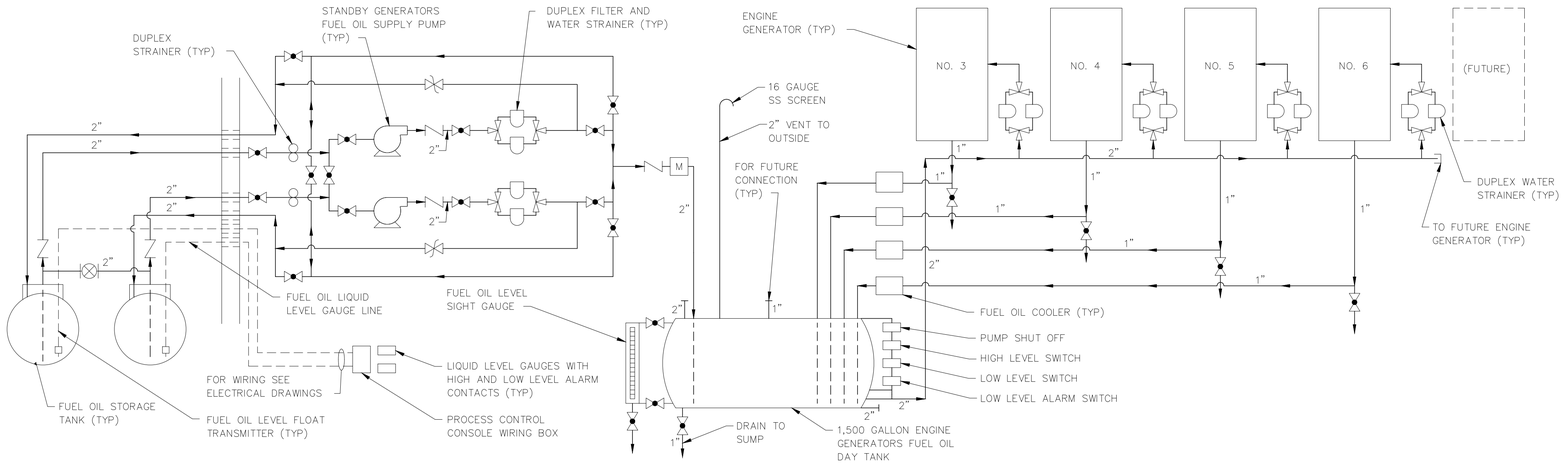

ENGINE GENERATOR FUEL SYSTEM DIAGRAM

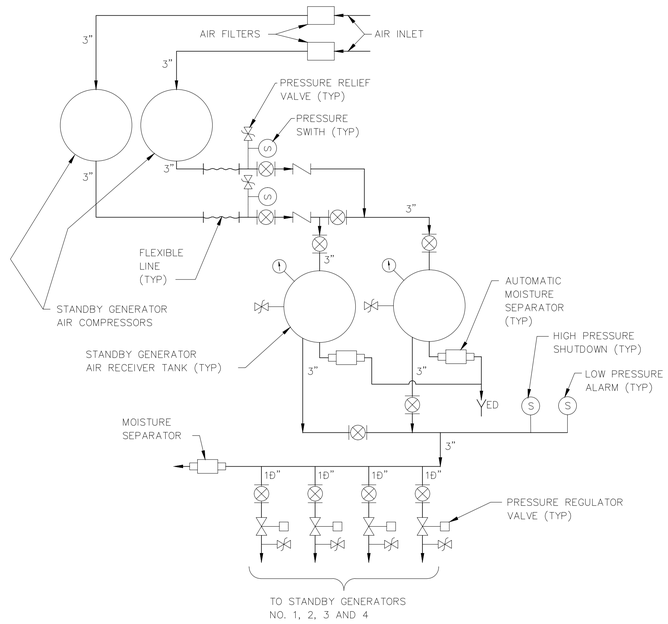

STANDBY GENERATOR AIR STARTING SYSTEM DIAGRAM

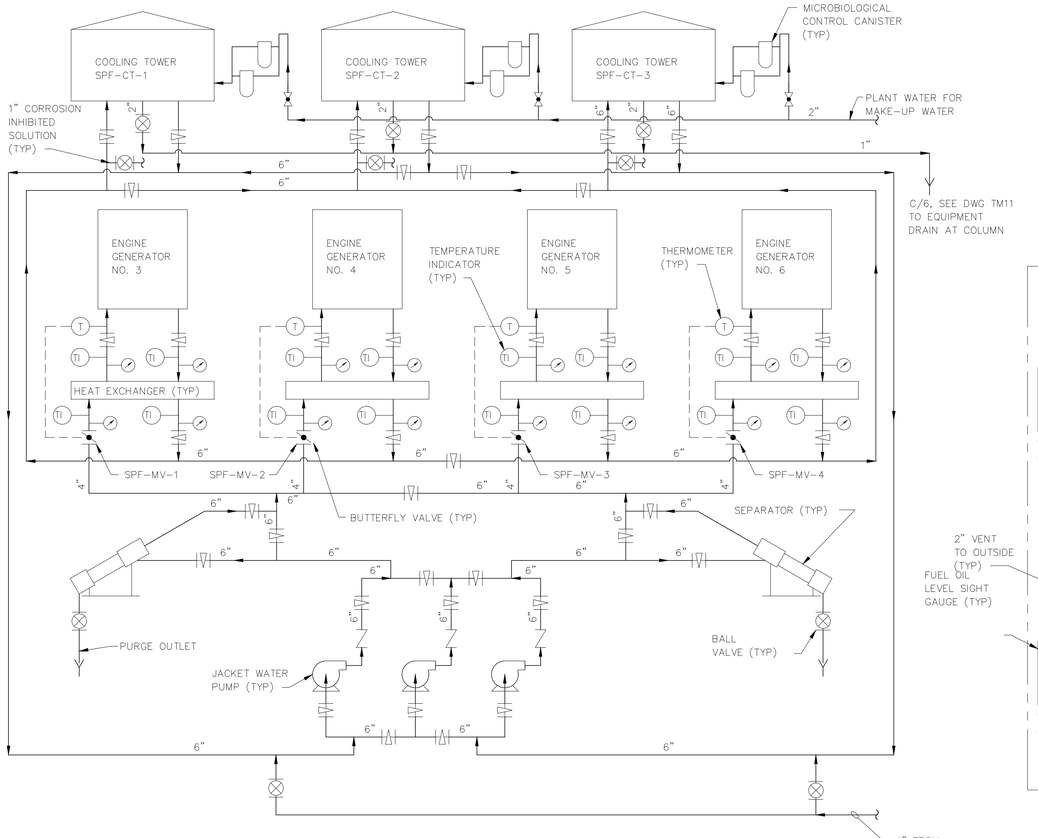

ENGINE GENERATOR JACKET WATER DIAGRAM

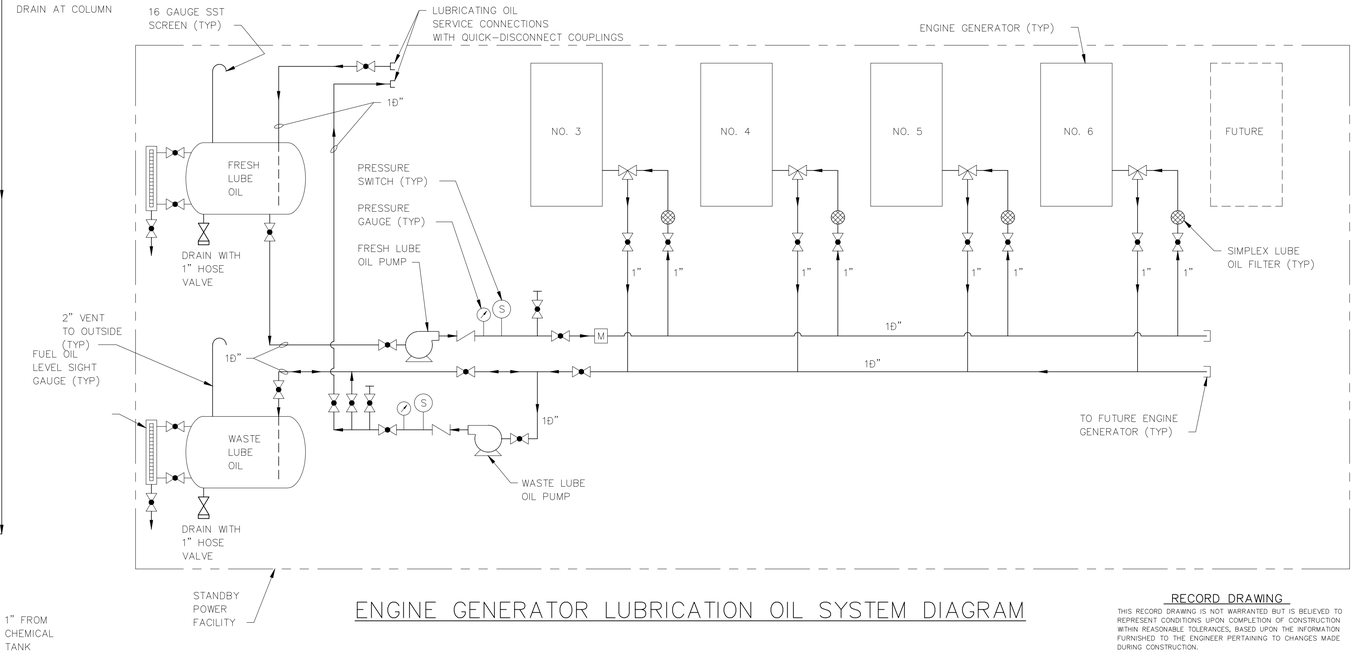

ENGINE GENERATOR LUBRICATION OIL SYSTEM DIAGRAM

RECORD DRAWING

THIS RECORD DRAWING IS NOT WARRANTED BUT IS BELIEVED TO REPRESENT CONDITIONS UPON COMPLETION OF CONSTRUCTION WITHIN REASONABLE TOLERANCES, BASED UPON THE INFORMATION FURNISHED TO THE ENGINEER PERTAINING TO CHANGES MADE DURING CONSTRUCTION.

GREELEY AND HANSEN
ENGINEERS
1715 NORTH WESTSHORE BOULEVARD
TAMPA, FLORIDA 33607-4135

DESIGNED SFS
DRAWN SK
CHECKED JRP

APPROVED _____ DATE _____
_____ DATE _____
GREELEY AND HANSEN, ENGINEERS

NO.	DATE	APPD	REVISION
4	8/15/96		RECORD DWG REVISIONS

SCALE
NO SCALE

CITY OF TAMPA, FLORIDA
HOOKERS POINT WASTEWATER TREATMENT PLANT
PLANT EXPANSION
PHASE I DIVISION 5H3B
STANDBY POWER AND SLUDGE STORAGE FACILITIES

STANDBY POWER FACILITY
MECHANICAL
DIAGRAMS

See Supplemental Drawings SD-33 and SD-58

PROJ NO. 202G
DWG TM9
SHEET
DATE DECEMBER 1991 REV 4

5H3B_0TM-009

FILE: M3B-TM09 SCALE: 1:1 09/09, 1996 at 12:18 - *13_cAh (Hardware Lock)*

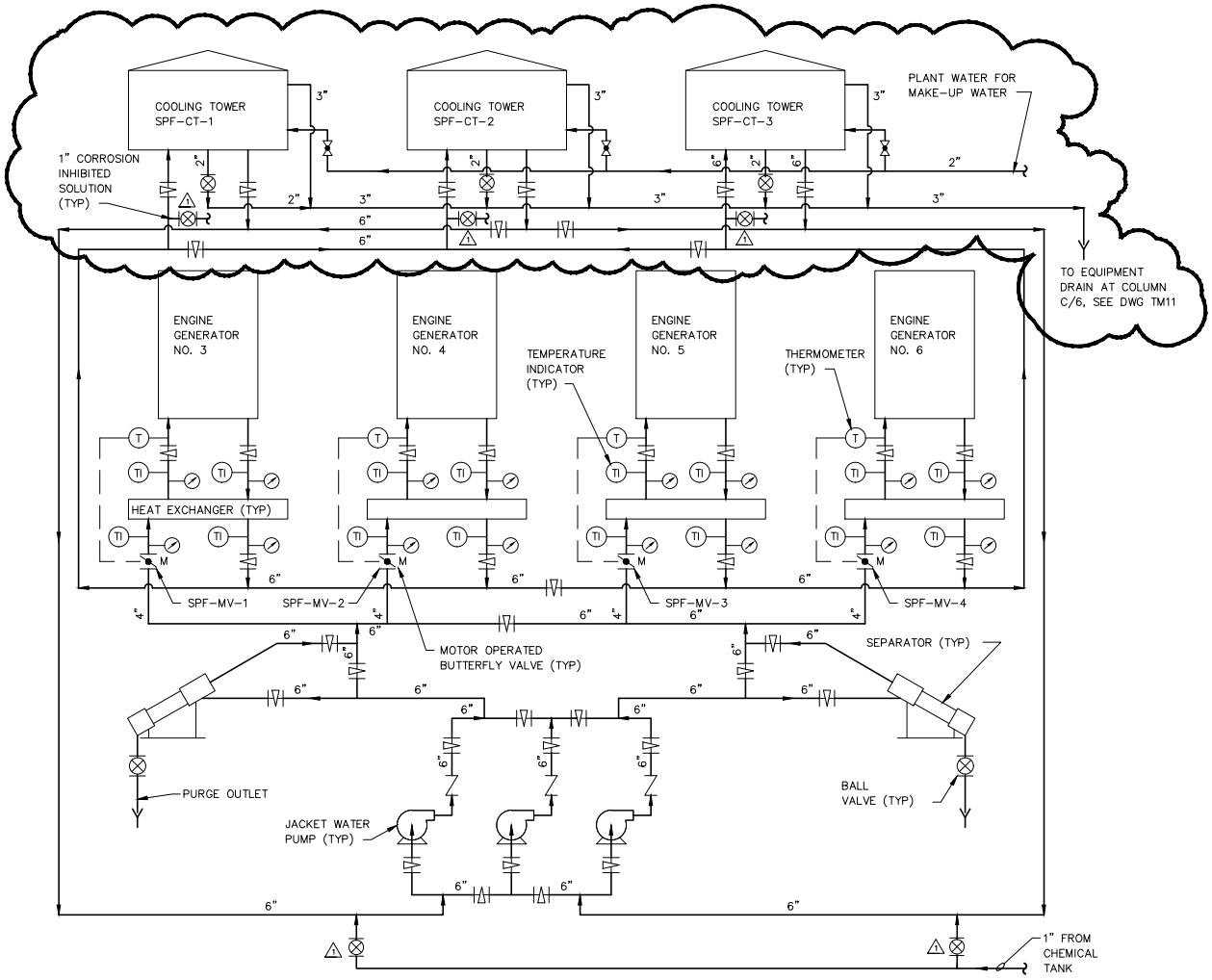

ENGINE GENERATOR JACKET WATER DIAGRAM

REVISES DWG TM9

DES JPG	CKD DCH					H.P.W.W.T.P.
DR AA	APPD					DIVISION 5H3B
GREELEY AND HANSEN ENGINEERS TAMPA, FLORIDA 36607		2	02/2/95	JPG	ADD OVERFLOW PIPING	SD-33
		1	12/6/93	JPG	CHANGE TO BALL VALVE	
		NO.	DATE	APPD	REVISION	DATE NOV. 1993 NO. 2

FILE: H:\AC\5H3B\SD\HB3SD033 SCALE: 1:11 02/06, 1995 at 14:18 *R11 c2*

5H3B_0TM-009A

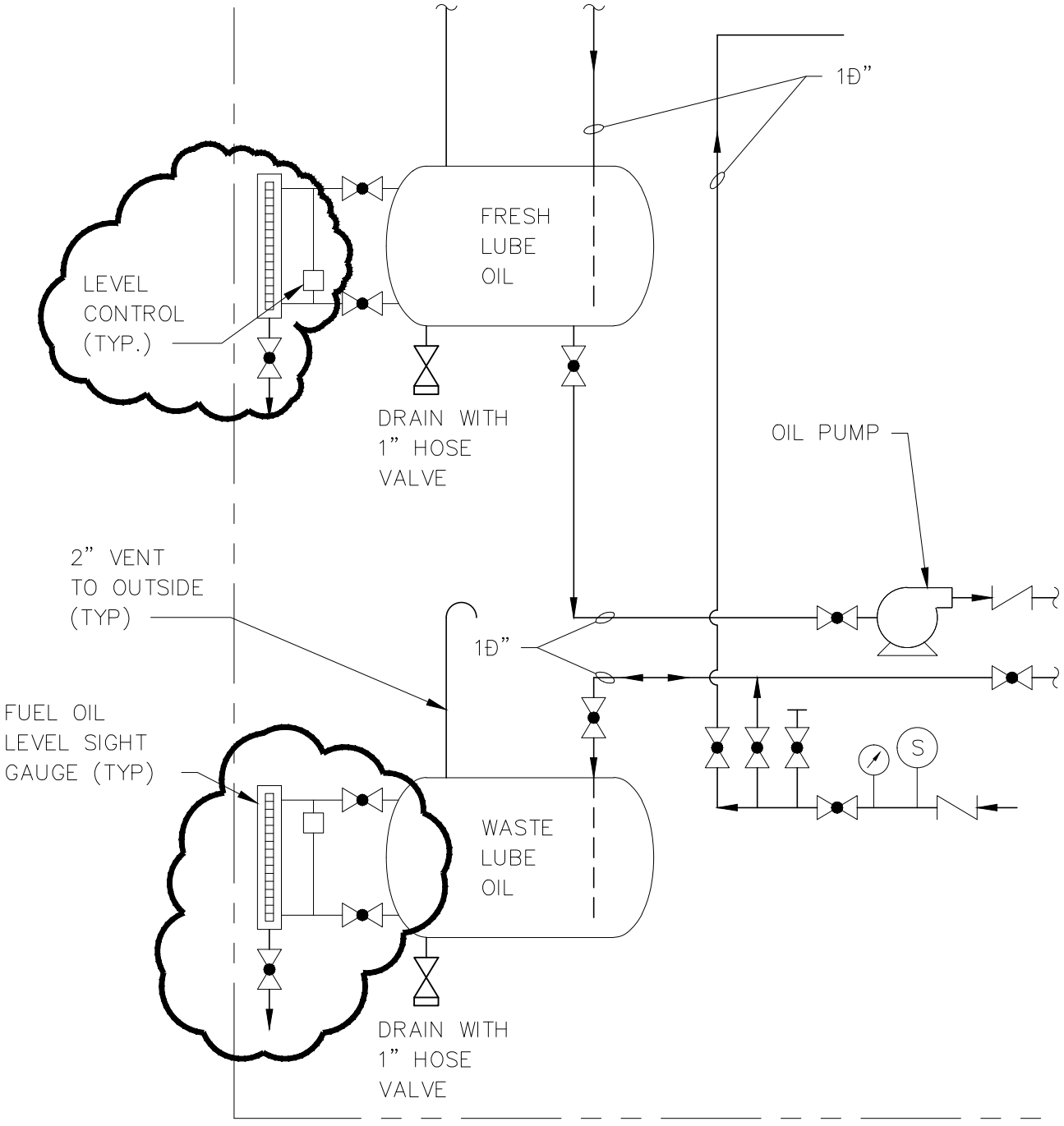

REVISES DWG TM9

DES EWW	CKD DCH					CITY OF TAMPA
DR ROO	APPD					H.P.W.W.T.P. DIV 5H3B
GREELEY AND HANSEN ENGINEERS TAMPA, FLORIDA 36607						SD–58
		NO.	DATE	APPD	REVISION	DATE APL 95 NO. 0

FILE: H:\AC\5H3B\SD\H3BESD58 SCALE: 1:1i 04/17, 1995 at 15:50 *R11 c2*

5H3B_0TM-009B

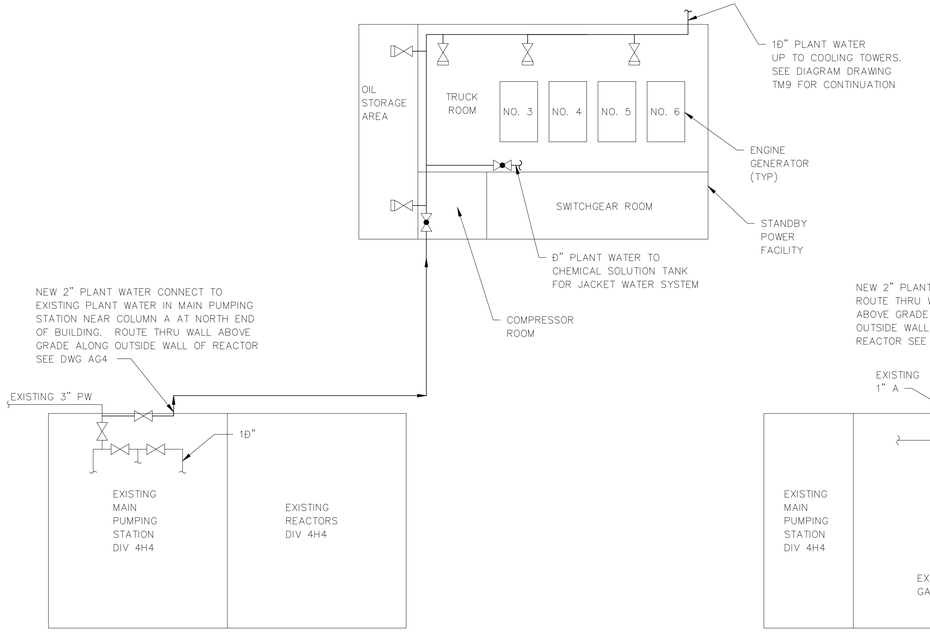

PLANT WATER DIAGRAM

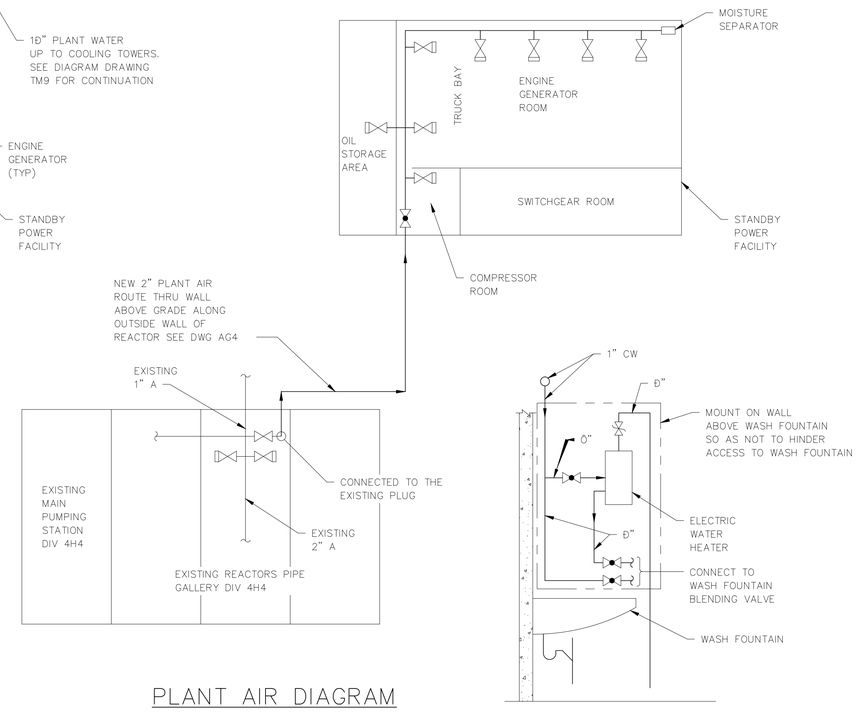

PLANT AIR DIAGRAM

WASH FOUNTAIN WATER CONNECTING DIAGRAM

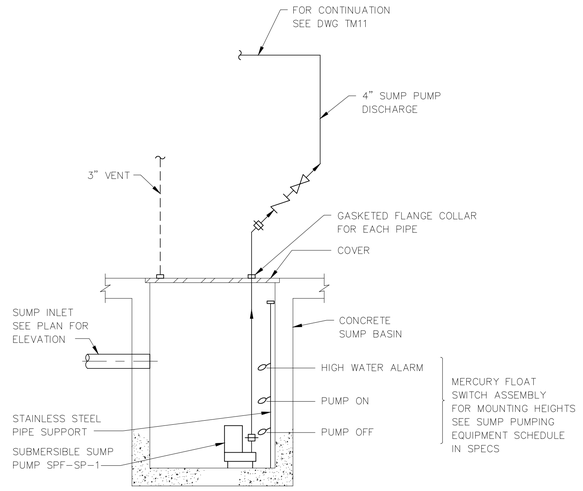

SIMPLEX SUMP PUMP DETAIL

NOT TO SCALE

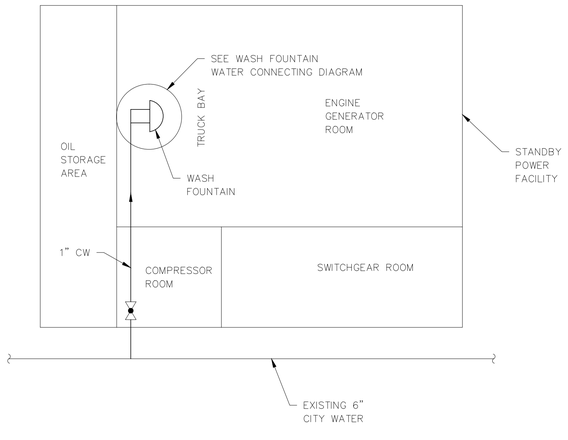

CITY WATER DIAGRAM

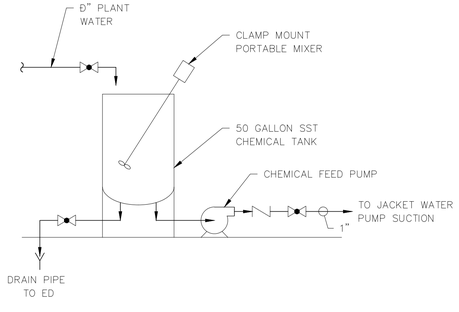

JACKET WATER CHEMICAL SYSTEM DIAGRAM

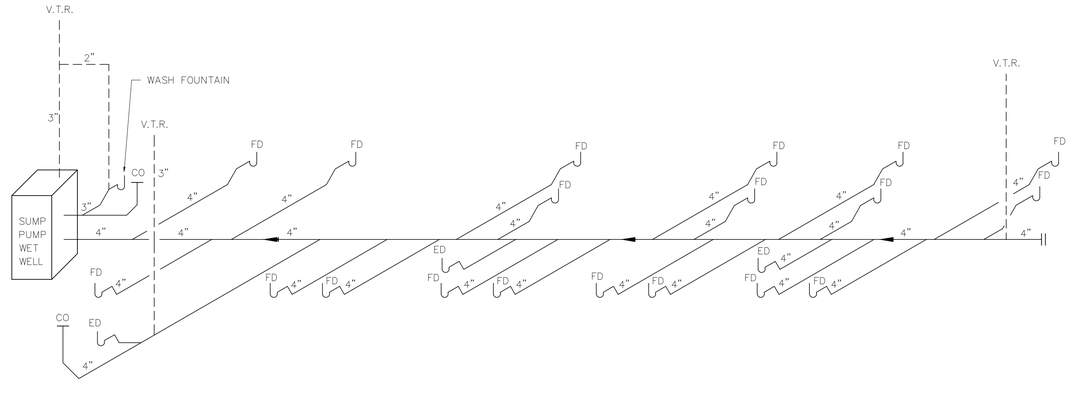

FLOOR DRAIN RISER DIAGRAM

NOT TO SCALE

RECORD DRAWING

THIS RECORD DRAWING IS NOT WARRANTED BUT IS BELIEVED TO REPRESENT CONDITIONS UPON COMPLETION OF CONSTRUCTION WITHIN REASONABLE TOLERANCES, BASED UPON THE INFORMATION FURNISHED TO THE ENGINEER PERTAINING TO CHANGES MADE DURING CONSTRUCTION.

GREELEY AND HANSEN ENGINEERS 1715 NORTH WESTSHORE BOULEVARD TAMPA, FLORIDA 33607-4135	DESIGNED SFS DRAWN DLT CHECKED JRP	APPROVED DATE DATE GREELEY AND HANSEN, ENGINEERS	3 8/12/96 RECORD DWG REVISIONS NO. DATE APPD REVISION	SCALE NO SCALE	CITY OF TAMPA, FLORIDA HOOKERS POINT WASTEWATER TREATMENT PLANT PLANT EXPANSION PHASE I DIVISION 5H3B STANDBY POWER AND SLUDGE STORAGE FACILITIES	STANDBY POWER FACILITY MECHANICAL DIAGRAMS AND DETAILS	PROJ NO. 202G DWG TM10 SHEET DATE DECEMBER 1991 REV 3

FILE: H3B-TM10 SCALE: 1:1 09/10, 1996 at 08:11 - *13_c4h (Hardware Lock)*

5H3B_0TM-010

SECTION 17/TM11

SCALE: 1"=1'-0"

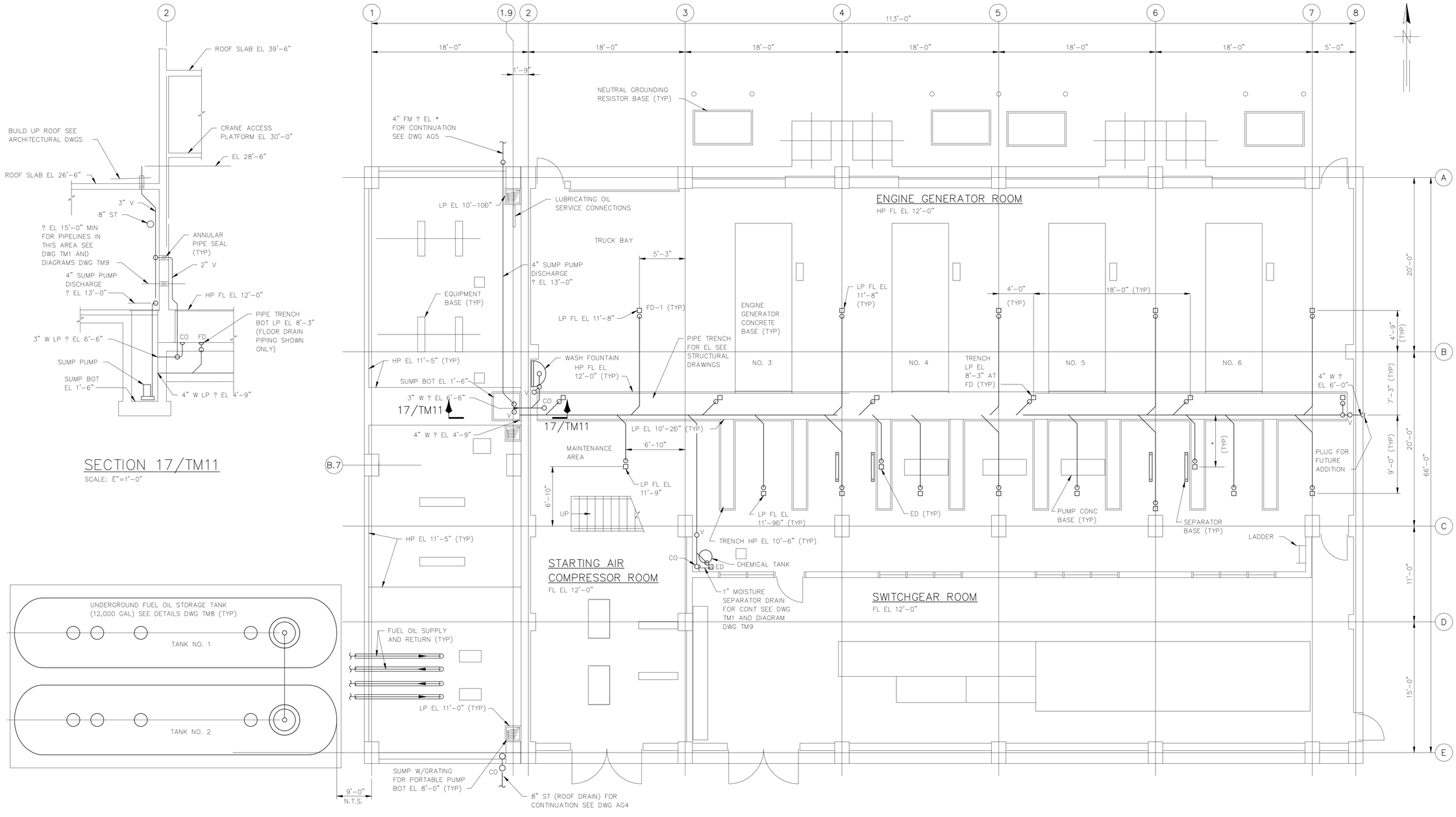

FLOOR DRAIN PLAN – FL EL 12'-0"

SCALE: 1"=1'-0"

RECORD DRAWING

THIS RECORD DRAWING IS NOT WARRANTED BUT IS BELIEVED TO REPRESENT CONDITIONS UPON COMPLETION OF CONSTRUCTION WITHIN REASONABLE TOLERANCES, BASED UPON THE INFORMATION FURNISHED TO THE ENGINEER PERTAINING TO CHANGES MADE DURING CONSTRUCTION.

GREELEY AND HANSEN
ENGINEERS
1715 NORTH WESTSHORE BOULEVARD
TAMPA, FLORIDA 33607-4135

DESIGNED SFS, RPN
DRAWN RPN
CHECKED JRP

APPROVED _____ DATE _____
_____ DATE _____
GREELEY AND HANSEN, ENGINEERS

NO.	DATE	APPD	REVISION
4	8/12/96		RECORD DWG REVISIONS

SCALE
4 0 4 8 12 FT
3/16"=1'-0"

CITY OF TAMPA, FLORIDA
HOOKERS POINT WASTEWATER TREATMENT PLANT
PLANT EXPANSION
PHASE I DIVISION 5H3B
STANDBY POWER AND SLUDGE STORAGE FACILITIES

STANDBY POWER FACILITY
MECHANICAL
FLOOR DRAIN – PLAN AND SECTION

See Supplemental Drawing SD-8

PROJ NO. 202G
DWG TM11
SHEET
DATE DECEMBER 1991 REV 4

5H3B_0TM-011

FILE: H3B-TM11 SCALE: 1:64 09/10, 1996 at 08:13 - *13_4h (Hardware Lock)*

SECTION 17/TM11

SCALE: 1"=1'-0"

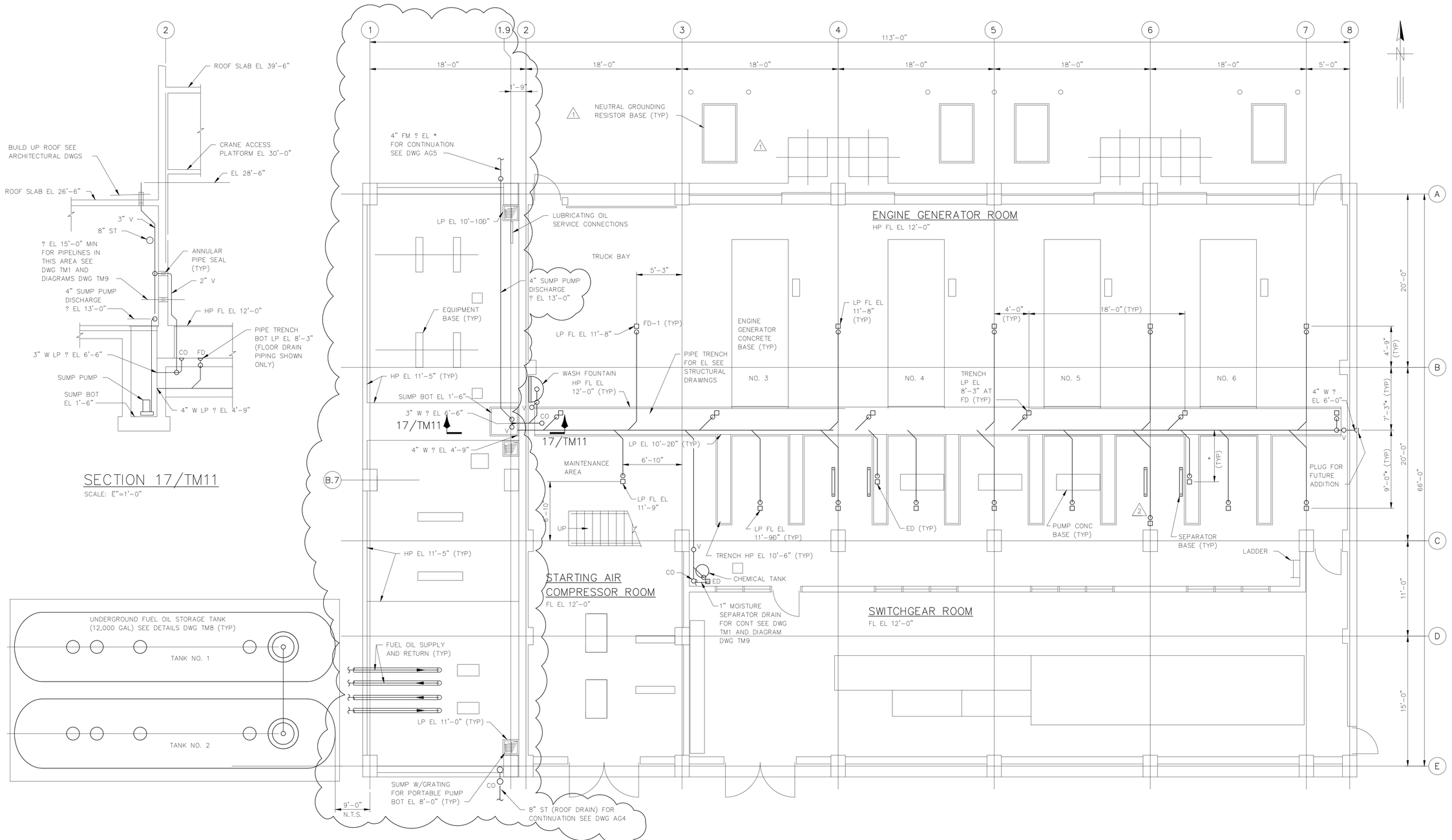

FLOOR DRAIN PLAN – FL EL 12'-0"

SCALE: 1"=1'-0"

REVISES DWG TM11

GREELEY AND HANSEN ENGINEERS 4350 WEST CYPRESS STREET TAMPA, FLORIDA 33607-4135	DESIGNED SFS RPN DRAWN RPN CHECKED JRP	APPROVED _____ DATE _____ _____ DATE _____ GREELEY AND HANSEN, ENGINEERS	SCALE 4 0 4 8 12 FT 3/16"=1'-0"

NO.	DATE	APPD	REVISION
3	4/20/93	DCH	FIRE MARSHAL'S COMMENTS
2	8/04/92	DCH	REVISED PER ADD NO 2
1	2/20/92	JRP	REVISED NORTH WALL

CITY OF TAMPA, FLORIDA
HOOKERS POINT WASTEWATER TREATMENT PLANT
PLANT EXPANSION
PHASE I DIVISION 5H3B
STANDBY POWER AND SLUDGE STORAGE FACILITIES

STANDBY POWER FACILITY
MECHANICAL
FLOOR DRAIN – PLAN AND SECTION

PROJ NO. 202G
DWG SD-8
SHEET
DATE DECEMBER 1991 REV 3

5H3B_0TM-011A

FILE: N:\ACS\WRD\SSU\WRD0008 SCALE: 1:44.04(22.1993 at 08:51 AM) -2*

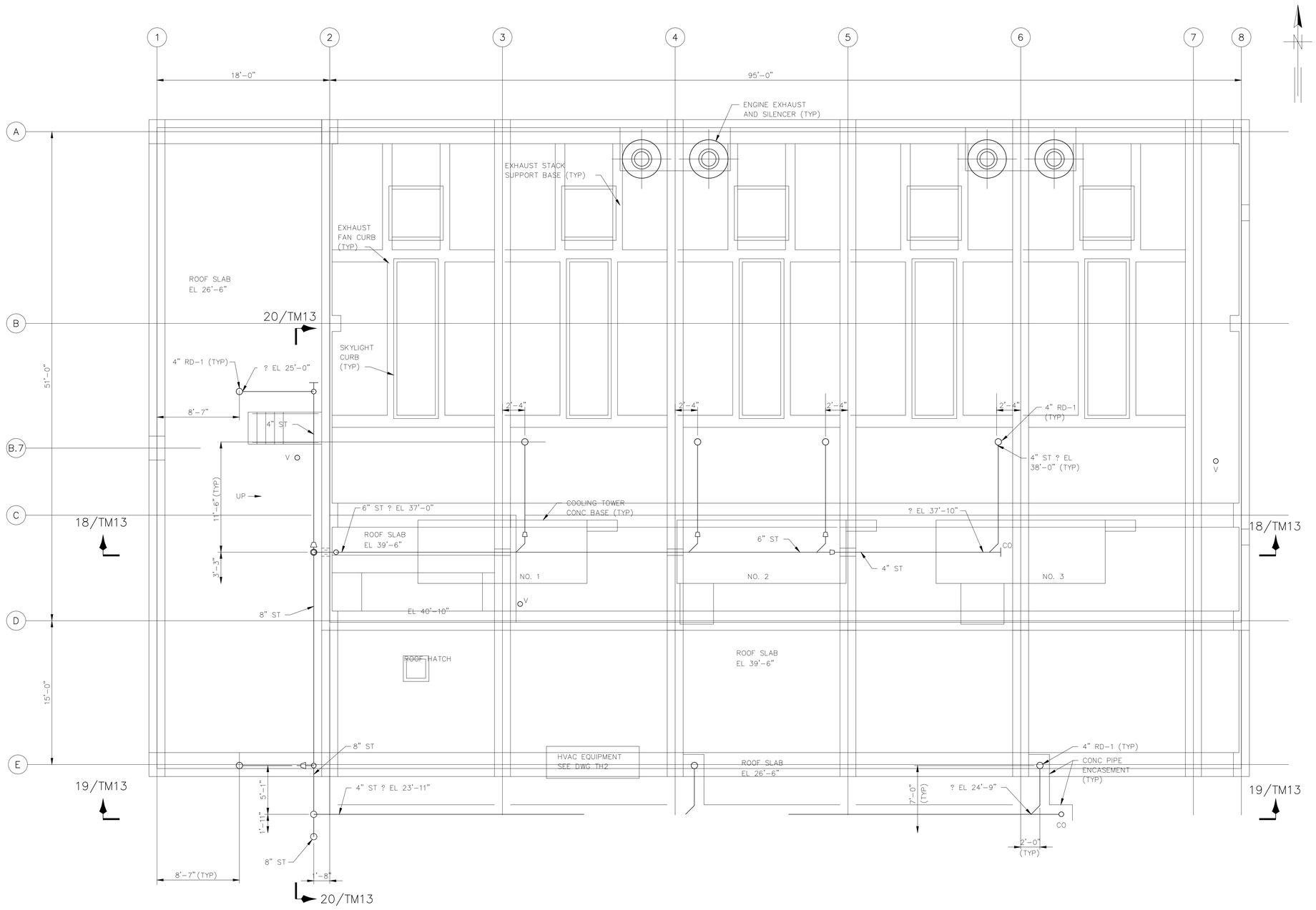

ROOF DRAIN – PLAN

SCALE: 1"=1'-0"

RECORD DRAWING

THIS RECORD DRAWING IS NOT WARRANTED BUT IS BELIEVED TO REPRESENT CONDITIONS UPON COMPLETION OF CONSTRUCTION WITHIN REASONABLE TOLERANCES, BASED UPON THE INFORMATION FURNISHED TO THE ENGINEER PERTAINING TO CHANGES MADE DURING CONSTRUCTION.

FILE: =5B-TM12 SCALE: 1:64 09/10, 1996 at 09:33 - *13_cth (Hardware Lock)*

GREELEY AND HANSEN
ENGINEERS
1715 NORTH WESTSHORE BOULEVARD
TAMPA, FLORIDA 33607-4135

DESIGNED SFS, RPN
DRAWN RPN
CHECKED JRP

APPROVED _____ DATE _____
_____ DATE _____
GREELEY AND HANSEN, ENGINEERS

NO.	DATE	APPD	REVISION
3	8/2/96		RECORD DWG REVISIONS

SCALE
4 0 4 8 12 FT
3/16"=1'-0"

CITY OF TAMPA, FLORIDA
HOOKERS POINT WASTEWATER TREATMENT PLANT
PLANT EXPANSION
PHASE I DIVISION 5H3B
STANDBY POWER AND SLUDGE STORAGE FACILITIES

STANDBY POWER FACILITY
MECHANICAL
ROOF DRAIN – PLAN

PROJ NO. 202G
DWG TM12
SHEET
DATE DECEMBER 1991 REV 3

5H3B_0TM-012

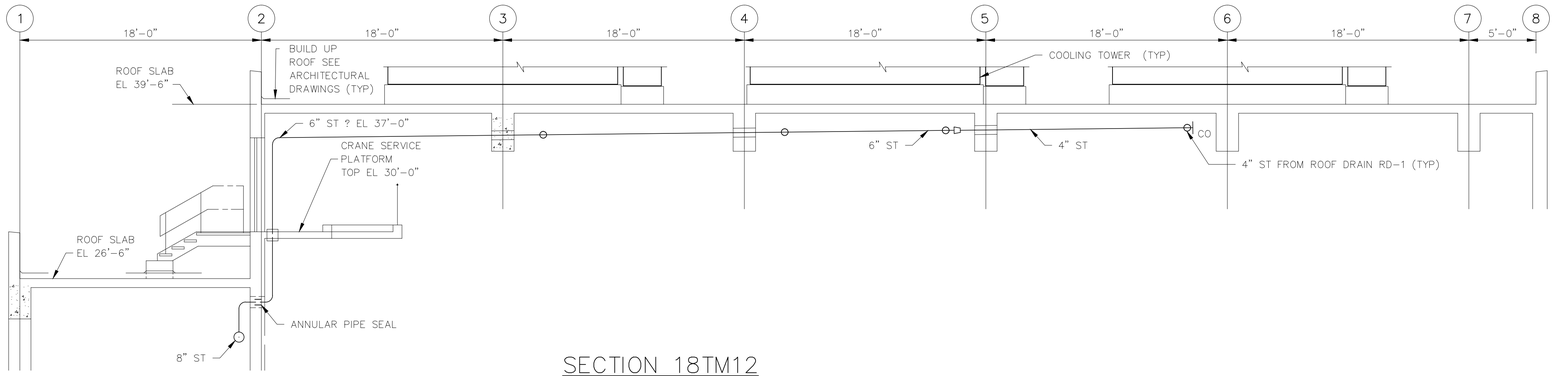

SECTION 18TM12

SCALE: E"=1'-0"

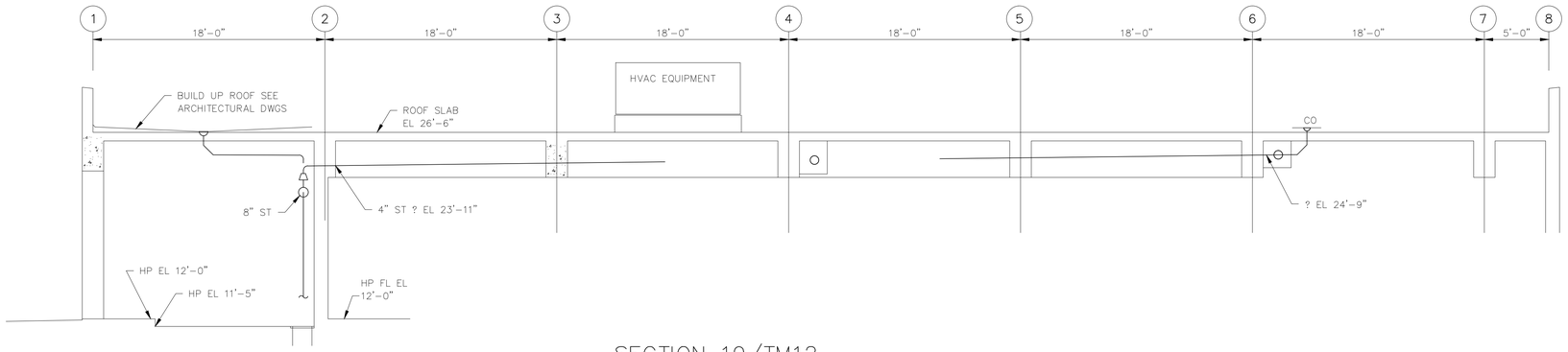

SECTION 19/TM12

SCALE: E"=1'-0"

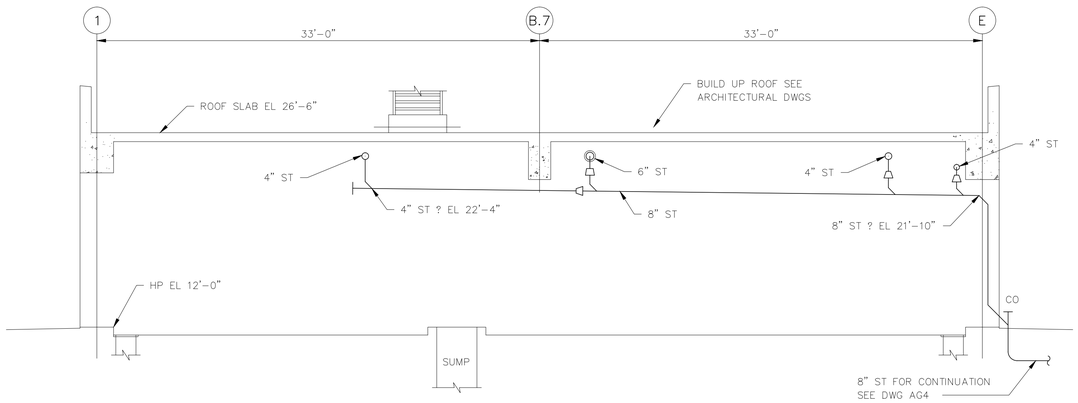

SECTION 20/TM12

SCALE: E"=1'-0"

NOTE:

ONLY ROOF DRAIN PIPING IS SHOWN ON THIS DRAWING.

RECORD DRAWING

THIS RECORD DRAWING IS NOT WARRANTED BUT IS BELIEVED TO REPRESENT CONDITIONS UPON COMPLETION OF CONSTRUCTION WITHIN REASONABLE TOLERANCES, BASED UPON THE INFORMATION FURNISHED TO THE ENGINEER PERTAINING TO CHANGES MADE DURING CONSTRUCTION.

GREELEY AND HANSEN
ENGINEERS
1715 NORTH WESTSHORE BOULEVARD
TAMPA, FLORIDA 33607-4135

DESIGNED SFS, RPN
DRAWN RPN
CHECKED JRP

APPROVED _____ DATE _____
_____ DATE _____
GREELEY AND HANSEN, ENGINEERS

NO.	DATE	APPD	REVISION
3	8/2/96		RECORD DWG REVISIONS

SCALE
4 0 4 8 12 FT
3/16"=1'-0"

CITY OF TAMPA, FLORIDA
HOOKERS POINT WASTEWATER TREATMENT PLANT
PLANT EXPANSION
PHASE I DIVISION 5H3B
STANDBY POWER AND SLUDGE STORAGE FACILITIES

STANDBY POWER FACILITY
MECHANICAL
ROOF DRAIN – SECTIONS

PROJ NO. 202G
DWG TM13
SHEET
DATE DECEMBER 1991 REV 3

5H3B_0TM-013

FILE: H3B-TM13 SCALE: 1:64 09/10, 1996 at 10:25 - *13_c4h (Hardware Lock)*

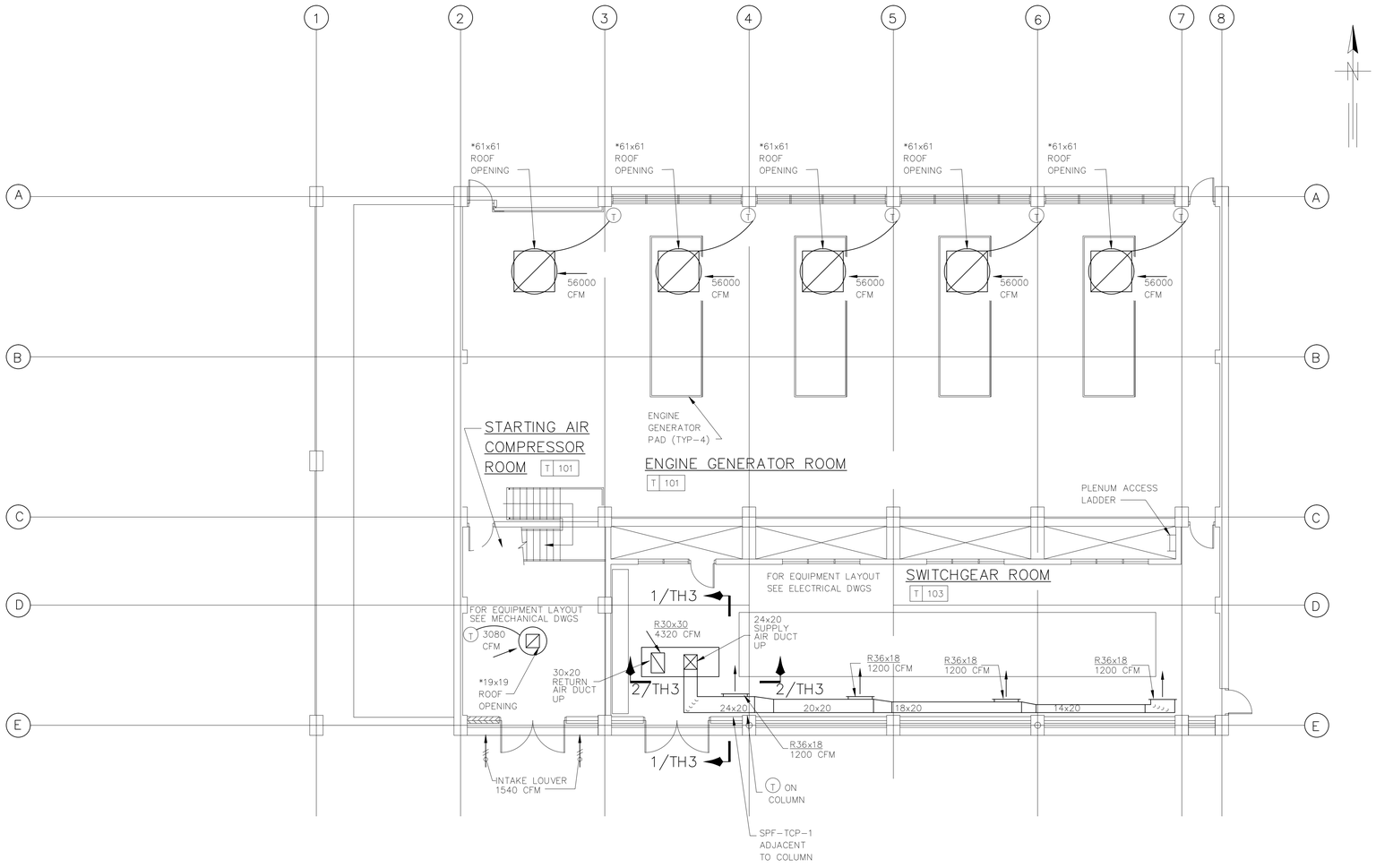

PLAN – FL EL 12'-0"

SCALE: 1/8"=1'-0"

*NOTE: COORDINATION OF EXACT DIMENSIONS TO BE DETERMINED AFTER FINAL SELECTION OF EQUIPMENT

NOTE:

1. APPROXIMATE OUTLINE OF ELELTRICAL EQUIPMENT. NO DUCTWORK SHALL BE ROUTEF ABOVE ELELTRICAL EQUIPMENT. FINAL ROUTING OF DUCTWORK SHALL BE COORDINATED WITH APPROVED ELECTRICAL EQUIPMENT.

EMTEC Corporation
CONSULTING ENGINEERS
1723 W. KENNEDY BOULEVARD
SUITE 210
TAMPA, FLORIDA 33606

RECORD DRAWING

THIS RECORD DRAWING IS NOT WARRANTED BUT IS BELIEVED TO REPRESENT CONDITIONS UPON COMPLETION OF CONSTRUCTION WITHIN REASONABLE TOLERANCES, BASED UPON THE INFORMATION FURNISHED TO THE ENGINEER PERTAINING TO CHANGES MADE DURING CONSTRUCTION.

GREELEY AND HANSEN
ENGINEERS
1715 NORTH WESTSHORE BOULEVARD
TAMPA, FLORIDA 33607-4135

DESIGNED BP
DRAWN BP
CHECKED

APPROVED _____ DATE _____
_____ DATE _____
GREELEY AND HANSEN, ENGINEERS

NO.	DATE	APPD	REVISION
2	8/16/96		RECORD DWG REVISIONS

SCALE
8 0 8 16 FT
1/8"=1'-0"

CITY OF TAMPA, FLORIDA
HOOKERS POINT WASTEWATER TREATMENT PLANT
PLANT EXPANSION
PHASE I DIVISION 5H3B
STANDBY POWER AND SLUDGE STORAGE FACILITIES

HVAC
STANDBY POWER FACILITY
PLAN AT EL 12'-0"

PROJ NO. 202G
DWG TH1
SHEET
DATE JANUARY 1992 REV 2

5H3B_0TH-001

FILE: H3B-TH01 SCALE: 1:96 09/10, 1996 at 12:04 - *13_c4h (Hardware Lock)*

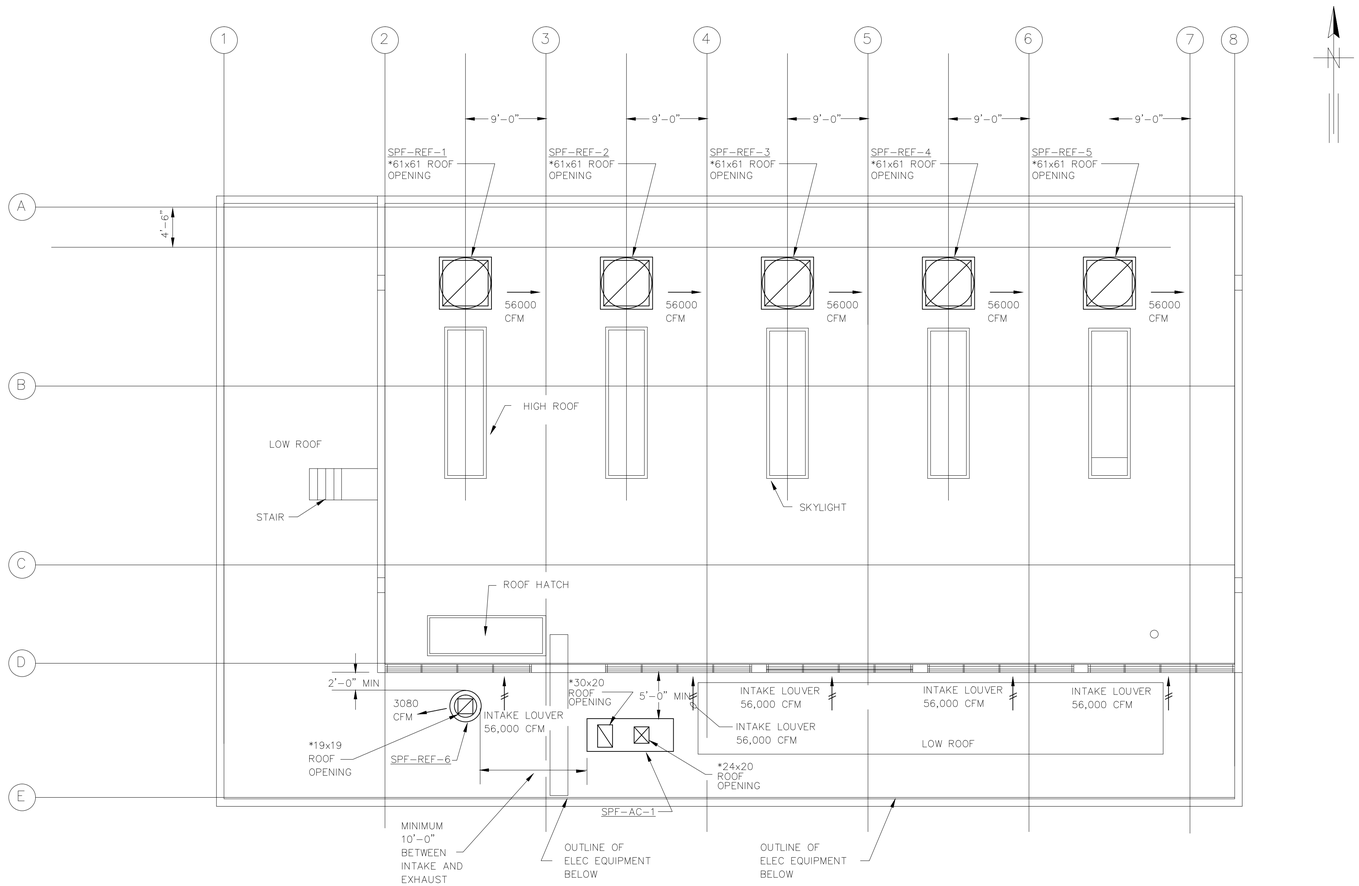

PLAN AT EL 42'-0"

SCALE :Ê":1'-0"

*NOTE: COORDINATION OF EXACT DIMENSIONS TO BE DETERMINED AFTER FINAL SELECTION OF EQUIPMENT

FILE: H3B-TH02 SCALE 1:96 9/10, 1996 AR 1:00 — *13_c4h (hardware lock)*

EMTEC Corporation
CONSULTING ENGINEERS
1723 W. KENNEDY BOULEVARD
SUITE 210
TAMPA, FLORIDA 33606

RECORD DRAWING

THIS RECORD DRAWING IS NOT WARRANTED BUT IS BELIEVED TO REPRESENT CONDITIONS UPON COMPLETION OF CONSTRUCTION WITHIN REASONABLE TOLERANCES, BASED UPON THE INFORMATION FURNISHED TO THE ENGINEER PERTAINING TO CHANGES MADE DURING CONSTRUCTION.

GREELEY AND HANSEN
ENGINEERS
1715 NORTH WESTSHORE BOULEVARD
TAMPA, FLORIDA 33607-4135

DESIGNED	BP
DRAWN	DJM
CHECKED	JRP

APPROVED _____ DATE _____

_____ DATE _____

GREELEY AND HANSEN, ENGINEERS

NO.	DATE	APPD	REVISION
3	8/1/96		RECORD DWG REVISIONS

SCALE

8 0 8 16 FT 1/8"=1'-0"

CITY OF TAMPA, FLORIDA
HOOKERS POINT WASTEWATER TREATMENT PLANT
PLANT EXPANSION
PHASE I DIVISION 5H3B
STANDBY POWER AND SLUDGE STORAGE FACILITIES

STANDBY POWER FACILITIES
HVAC
PLAN AT EL 42'-0"

PROJ NO.	202G
DWG	TH2
SHEET	
DATE	DECEMBER 1991
REV	3

5H3B_0TH-002

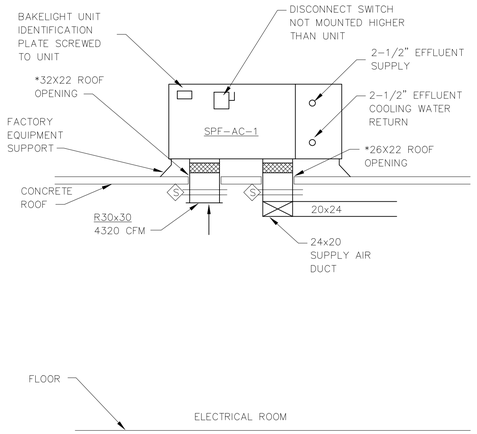

SECTION 2/TH1
SCALE: 1/4" = 1'-0"

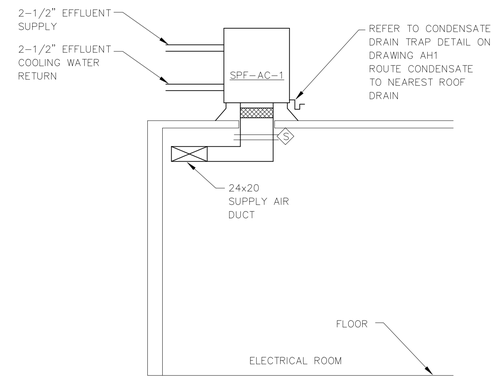

SECTION 1/TH1
SCALE: 1/4" = 1'-0"

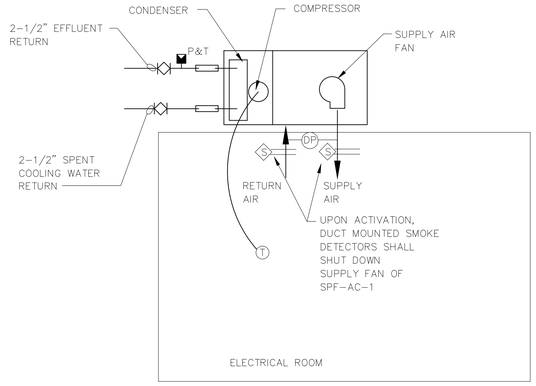

AIR CONDITIONING HYDRONIC FLOW, AIRFLOW AND CONTROL DIAGRAM
NOT TO SCALE

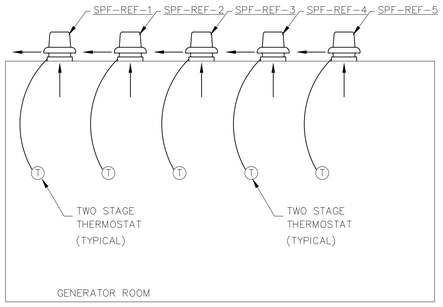

EXHAUST AIRFLOW AND CONTROL DIAGRAM – GENERATOR ROOM
NOT TO SCALE

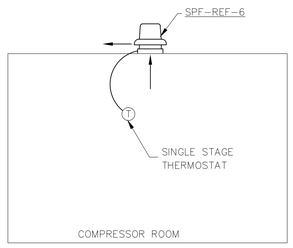

EXHAUST AIRFLOW AND CONTROL DIAGRAM – COMPRESSOR ROOM
NOT TO SCALE

RECORD DRAWING

THIS RECORD DRAWING IS NOT WARRANTED BUT IS BELIEVED TO REPRESENT CONDITIONS UPON COMPLETION OF CONSTRUCTION WITHIN REASONABLE TOLERANCES, BASED UPON THE INFORMATION FURNISHED TO THE ENGINEER PERTAINING TO CHANGES MADE DURING CONSTRUCTION.

EMTEC Corporation
CONSULTING ENGINEERS
1723 W. KENNEDY BOULEVARD
SUITE 210
TAMPA, FLORIDA 33606

GREELEY AND HANSEN
ENGINEERS
1715 NORTH WESTSHORE BOULEVARD
TAMPA, FLORIDA 33607-4135

DESIGNED BP
DRAWN BP
CHECKED JRP

APPROVED _____ DATE _____
_____ DATE _____
GREELEY AND HANSEN, ENGINEERS

NO.	DATE	APPD	REVISION
2	8/16/96		RECORD DWG REVISIONS

SCALE
4 0 4 8 FT
1/4"=1'-0"

CITY OF TAMPA, FLORIDA
HOOKERS POINT WASTEWATER TREATMENT PLANT
PLANT EXPANSION
PHASE I DIVISION 5H3B
STANDBY POWER AND SLUDGE STORAGE FACILITIES

STANDBY POWER FACILITY
HVAC
SECTIONS AND CONTROL DIAGRAMS

PROJ NO. 202G
DWG TH3
SHEET
DATE JANUARY 1992 REV 2

5H3B_0TH-003

FILE: =H3B-TH03 SCALE: 1:48 09/10, 1996 at 13:17 - *13_4th (Hardware Lock)*

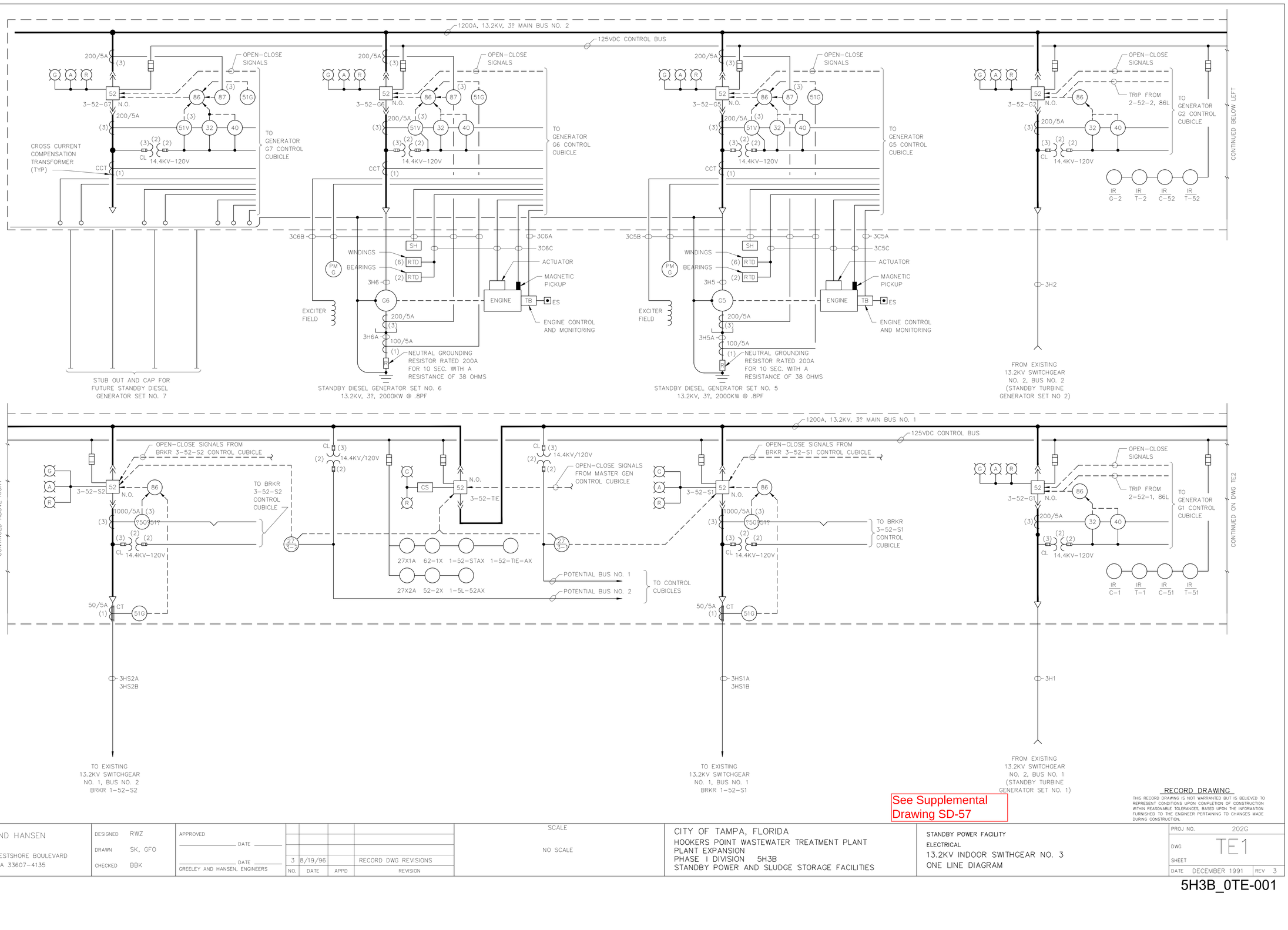

See Supplemental Drawing SD-57

RECORD DRAWING

THIS RECORD DRAWING IS NOT WARRANTED BUT IS BELIEVED TO REPRESENT CONDITIONS UPON COMPLETION OF CONSTRUCTION WITHIN REASONABLE TOLERANCES, BASED UPON THE INFORMATION FURNISHED TO THE ENGINEER PERTAINING TO CHANGES MADE DURING CONSTRUCTION.

GREELEY AND HANSEN
ENGINEERS
1715 NORTH WESTSHORE BOULEVARD
TAMPA, FLORIDA 33607–4135

DESIGNED	RWZ
DRAWN	SK, GFO
CHECKED	BBK

APPROVED _____ DATE _____
_____ DATE _____
GREELEY AND HANSEN, ENGINEERS

NO.	DATE	APPD	REVISION
3	8/19/96		RECORD DWG REVISIONS

SCALE
NO SCALE

CITY OF TAMPA, FLORIDA
HOOKERS POINT WASTEWATER TREATMENT PLANT
PLANT EXPANSION
PHASE I DIVISION 5H3B
STANDBY POWER AND SLUDGE STORAGE FACILITIES

STANDBY POWER FACILITY
ELECTRICAL
13.2KV INDOOR SWITHGEAR NO. 3
ONE LINE DIAGRAM

PROJ NO.	202G
DWG	TE1
SHEET	
DATE	DECEMBER 1991
REV	3

5H3B_0TE-001

H:\5B-TE01.DWG 03-20-98 10:42

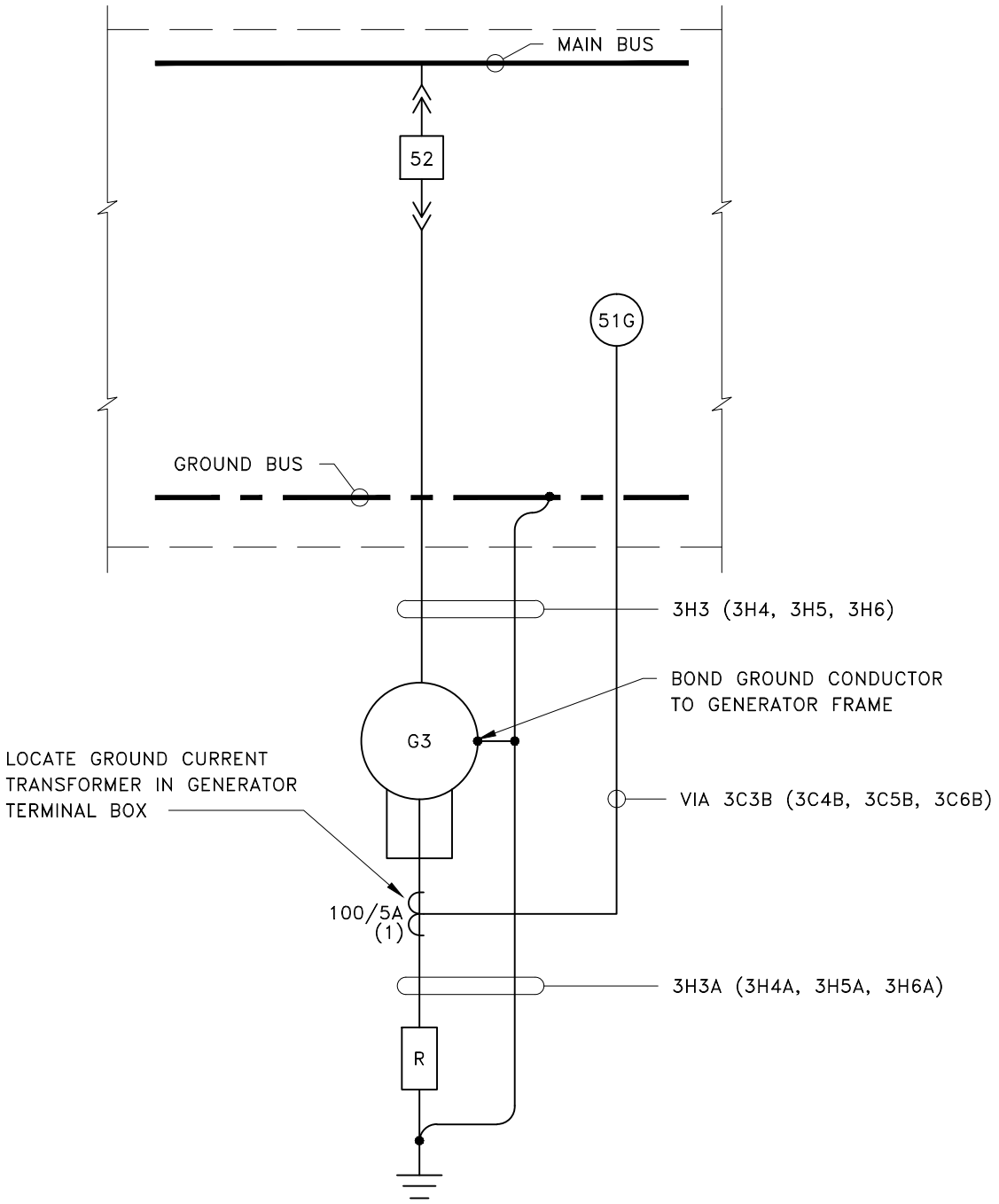

GENERATOR G3 GROUNDING DIAGRAM

TYPICAL FOR GENERATORS G4, G5 & G6

REVISES DWG TE1,TE2

DES BBK	CKD BBK					CITY OF TAMPA
DR BBK	APPD					H.P.W.W.T.P. DIV. 5H3B
GREELEY AND HANSEN ENGINEERS TAMPA, FLORIDA 36607						SD-57
		NO.	DATE	APPD	REVISION	DATE FEB 95 NO. 0

FILE: H:\AC\5H3B\SD\H3BSD057 SCALE: 1:11 02/20, 1995 at 08:47 *R11 c2*

5H3B_0TE-001A

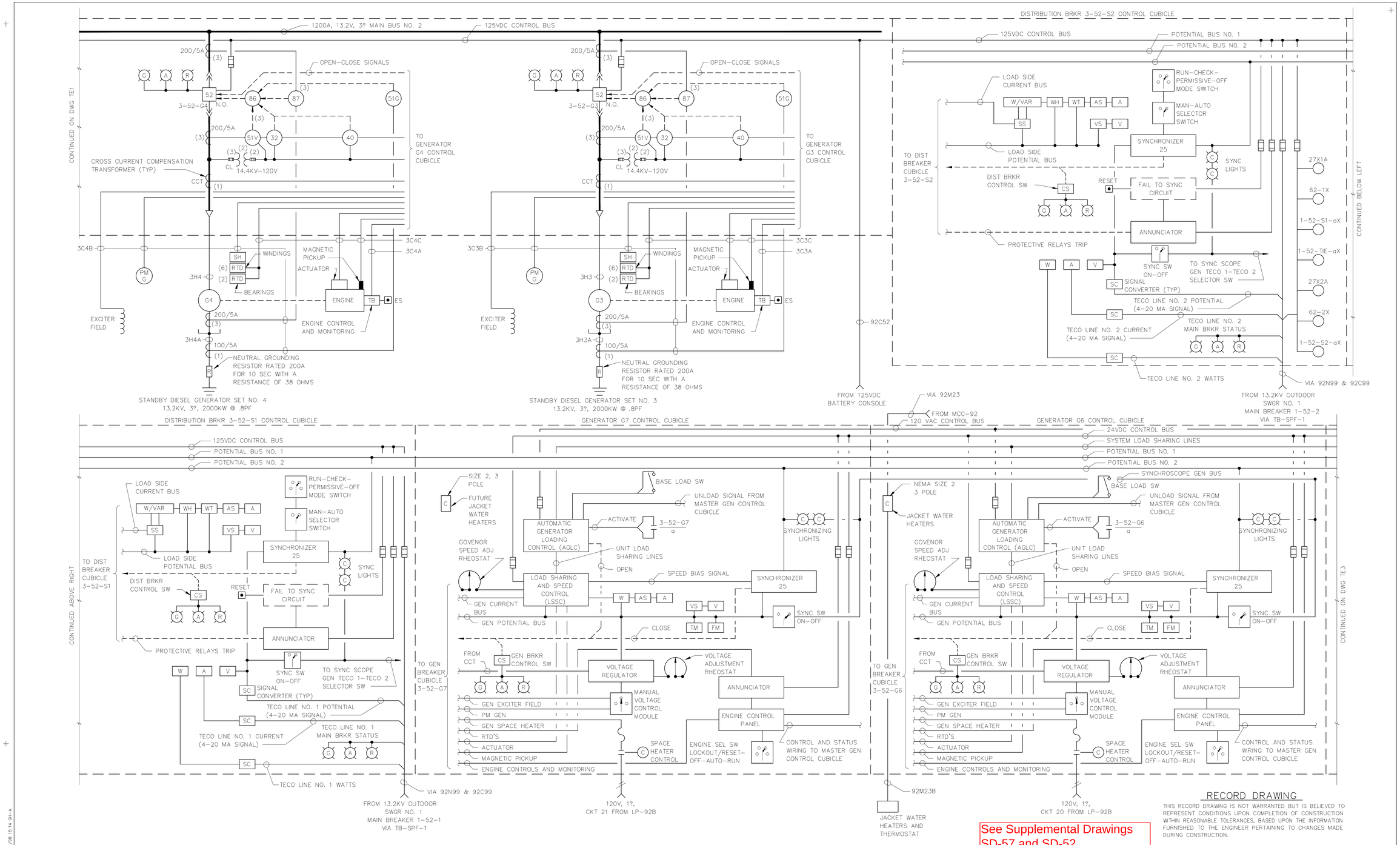

RECORD DRAWING

THIS RECORD DRAWING IS NOT WARRANTED BUT IS BELIEVED TO REPRESENT CONDITIONS UPON COMPLETION OF CONSTRUCTION WITHIN REASONABLE TOLERANCES, BASED UPON THE INFORMATION FURNISHED TO THE ENGINEER PERTAINING TO CHANGES MADE DURING CONSTRUCTION.

GREELEY AND HANSEN ENGINEERS 4350 WEST CYPRESS STREET TAMPA, FLORIDA 33607-4135	DESIGNED RWZ DRAWN SK GFO CHECKED BBK	APPROVED _____ DATE _____ _____ DATE _____ GREELEY AND HANSEN, ENGINEERS	NO. 1	DATE 4/98	APPD	REVISION RECORD DWG REVISIONS
SCALE NO SCALE	CITY OF TAMPA, FLORIDA HOOKERS POINT WASTEWATER TREATMENT PLANT PLANT EXPANSION PHASE I DIVISION 5H3B STANDBY POWER AND SLUDGE STORAGE FACILITIES	STANDBY POWER FACILITY ELECTRICAL 13.2KV INDOOR SWITCHGEAR NO. 3 ONE LINE DIAGRAM	PROJ NO. 202G DWG TE2 SHEET DATE DECEMBER 1991 REV 1			

FILE: H3B-TE02 1:1 04/27/98 15:14 GH-A

5H3B_0TE-002

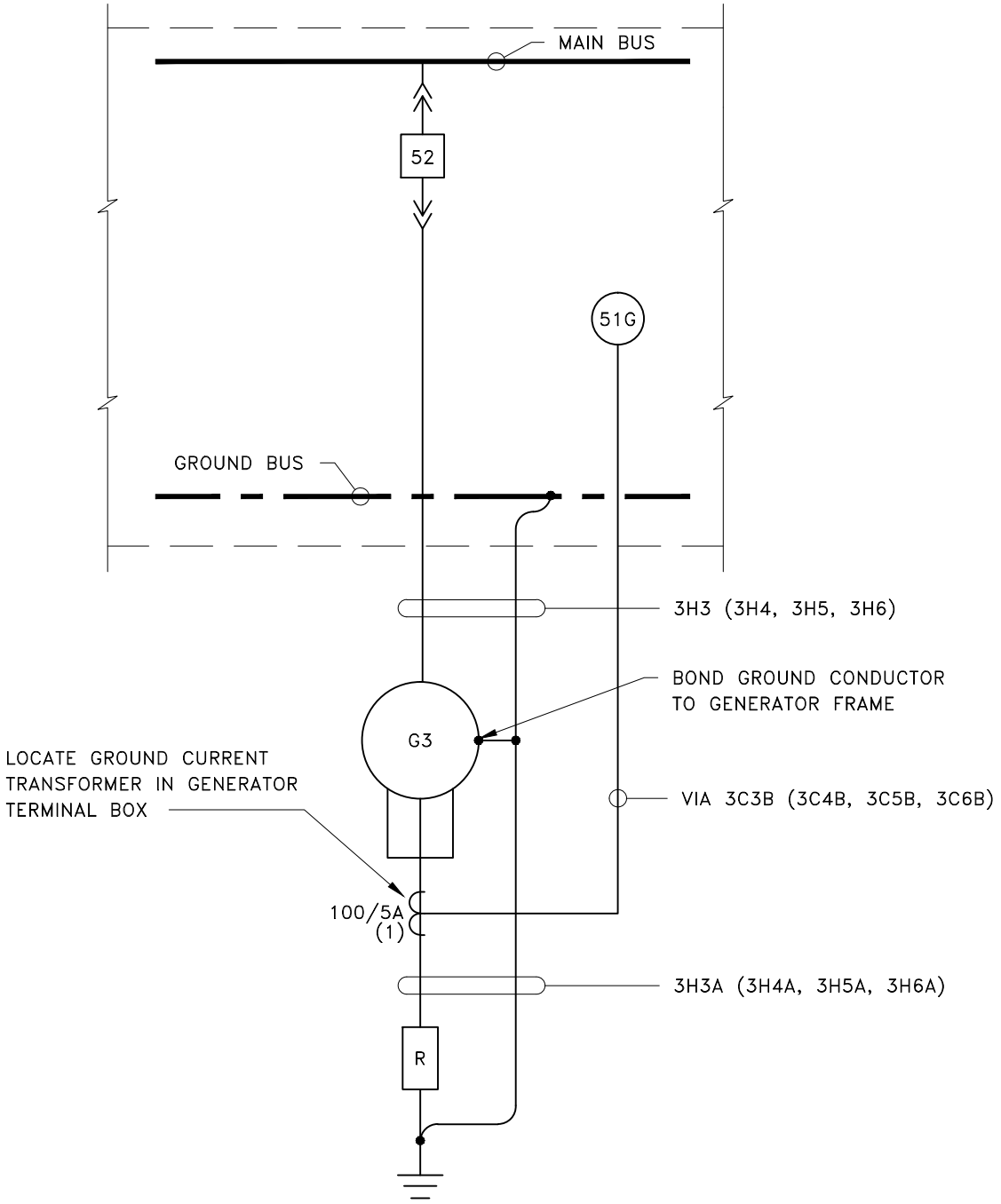

GENERATOR G3 GROUNDING DIAGRAM

TYPICAL FOR GENERATORS G4, G5 & G6

REVISES DWG TE1,TE2

DES BBK	CKD BBK					CITY OF TAMPA
DR BBK	APPD					H.P.W.W.T.P. DIV. 5H3B
GREELEY AND HANSEN ENGINEERS TAMPA, FLORIDA 36607						SD-57
		NO.	DATE	APPD	REVISION	DATE FEB 95 NO. 0

FILE: H:\AC\5H3B\SD\H3BSD057 SCALE: 1:11 02/20, 1995 at 08:47 *R11 c2*

5H3B_0TE-002A

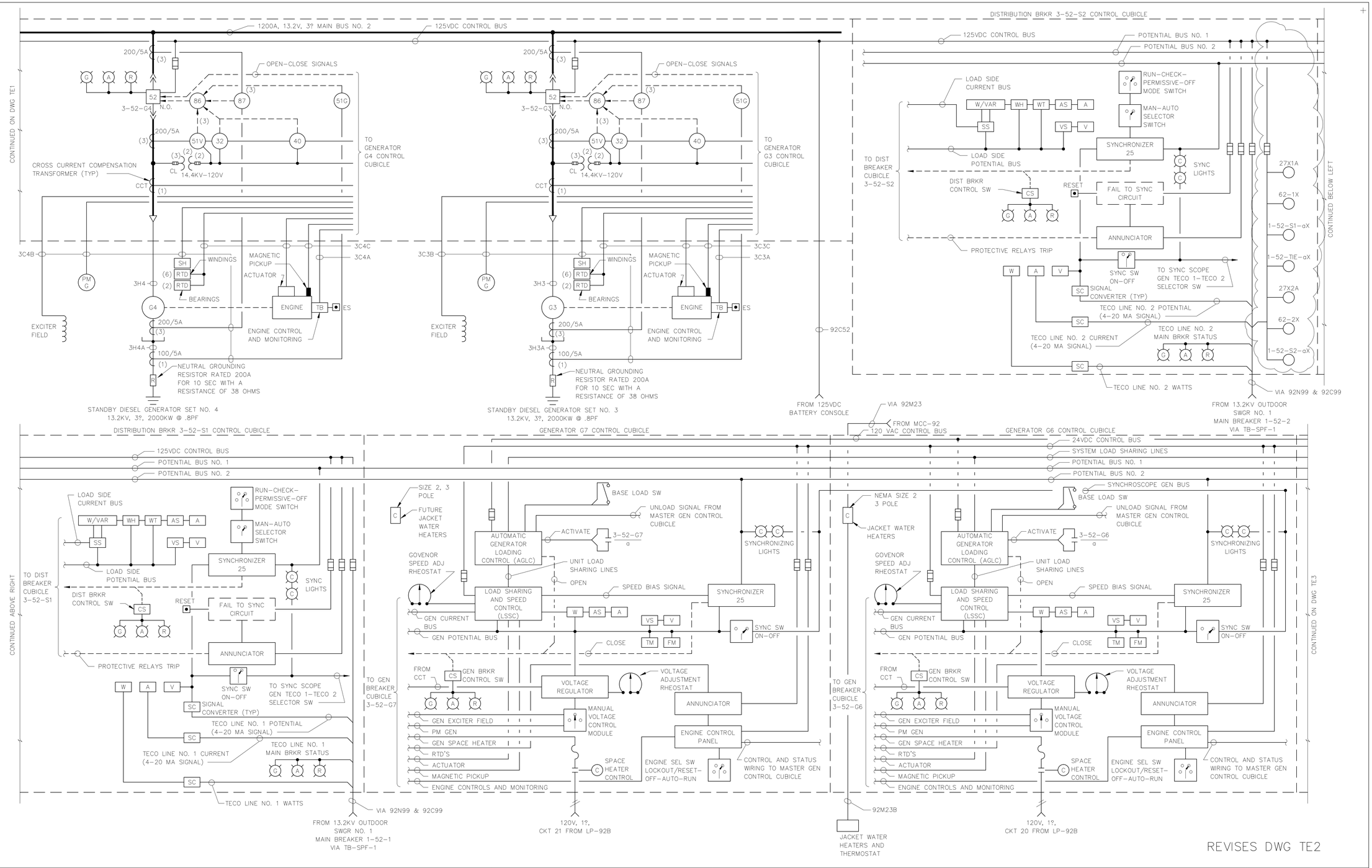

GREELEY AND HANSEN ENGINEERS 4350 WEST CYPRESS STREET TAMPA, FLORIDA 33607-4135	DESIGNED RWZ DRAWN SK GFO CHECKED BBK	APPROVED DATE DATE GREELEY AND HANSEN, ENGINEERS	NO. / DATE / APPD / REVISION	SCALE NO SCALE	CITY OF TAMPA, FLORIDA HOOKERS POINT WASTEWATER TREATMENT PLANT PLANT EXPANSION PHASE I DIVISION 5H3B STANDBY POWER AND SLUDGE STORAGE FACILITIES	STANDBY POWER FACILITY ELECTRICAL 13.2KV INDOOR SWITCHGEAR NO. 3 ONE LINE DIAGRAM	PROJ NO. 202G DWG SD-52 SHEET DATE DECEMBER 1991 REV 0

FILE: H:\ACAD\5H3B\GEN\5H3BSD2.DGN, 1:1 (0.7X), 1995 at 13:52 "401-d1"

5H3B_0TE-002B

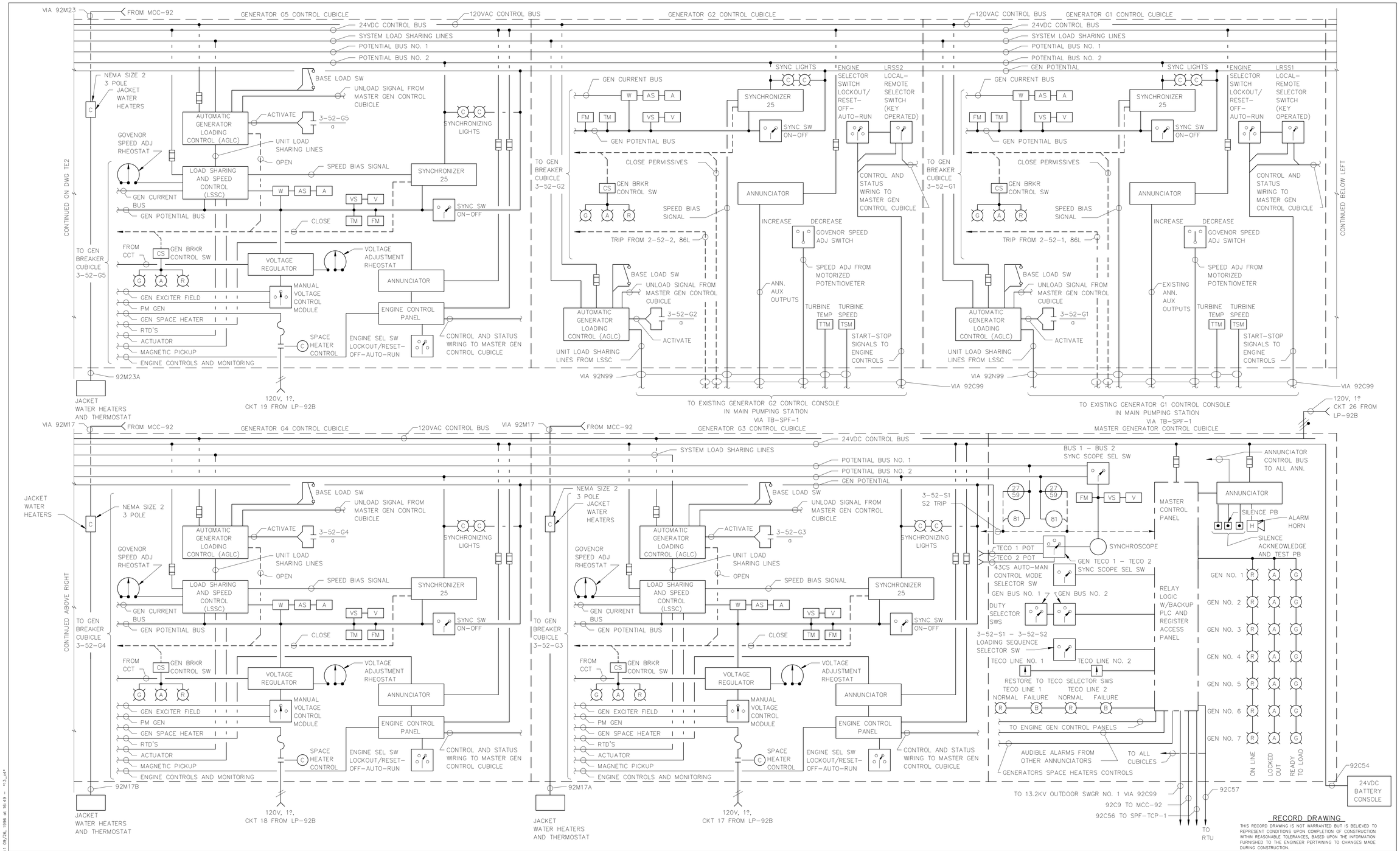

RECORD DRAWING

THIS RECORD DRAWING IS NOT WARRANTED BUT IS BELIEVED TO REPRESENT CONDITIONS UPON COMPLETION OF CONSTRUCTION WITHIN REASONABLE TOLERANCES, BASED UPON THE INFORMATION FURNISHED TO THE ENGINEER PERTAINING TO CHANGES MADE DURING CONSTRUCTION.

GREELEY AND HANSEN ENGINEERS 1715 NORTH WESTSHORE BOULEVARD TAMPA, FLORIDA 33607-4135	DESIGNED RWZ DRAWN GFO CHECKED BBK	APPROVED _____ DATE _____ _____ DATE _____ GREELEY AND HANSEN, ENGINEERS	3 8/1/96 RECORD DWG REVISIONS NO. DATE APPD REVISION	SCALE NO SCALE	CITY OF TAMPA, FLORIDA HOOKERS POINT WASTEWATER TREATMENT PLANT PLANT EXPANSION PHASE I DIVISION 5H3B STANDBY POWER AND SLUDGE STORAGE FACILITIES	STANDBY POWER FACILITY ELECTRICAL 13.2KV INDOOR SWITCHGEAR NO. 3 ONE LINE DIAGRAM	PROJ NO. 202G DWG TE3 SHEET DATE DECEMBER 1991 REV 3

5H3B_0TE-003

FILE: H3B-TE03 SCALE: 1:1 09/26, 1996 at 16:49 - *13_d4*

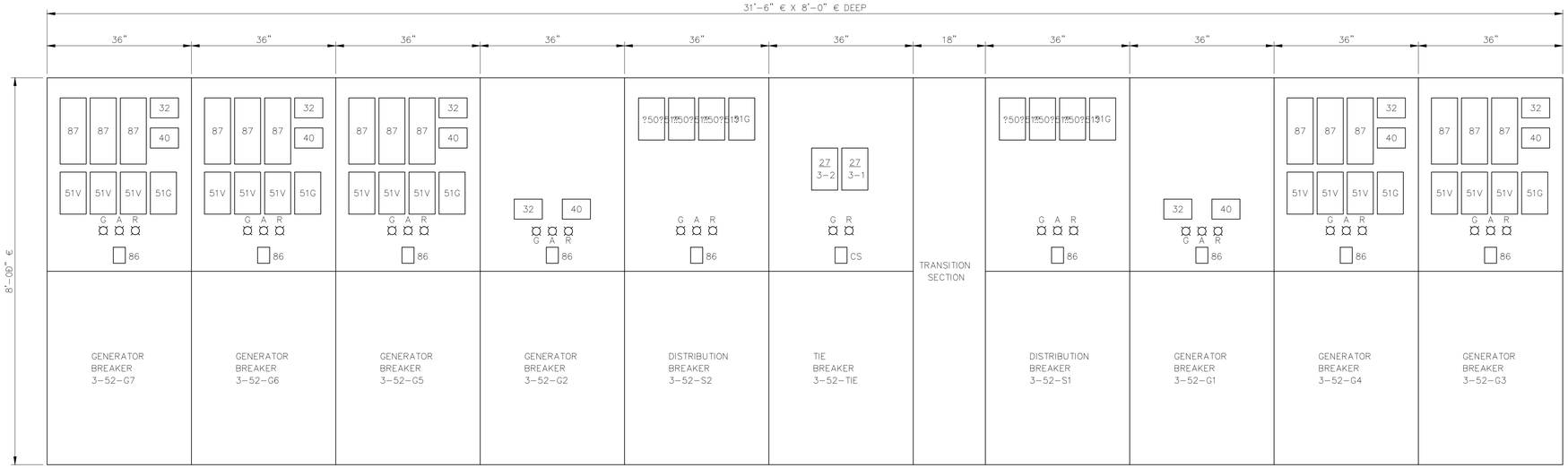

13.2KV INDOOR SWITCHGEAR NO.3 (MEDIUM VOLTAGE SECTION) – FRONT ELEVATION

SCALE: 0" = 1'-0"

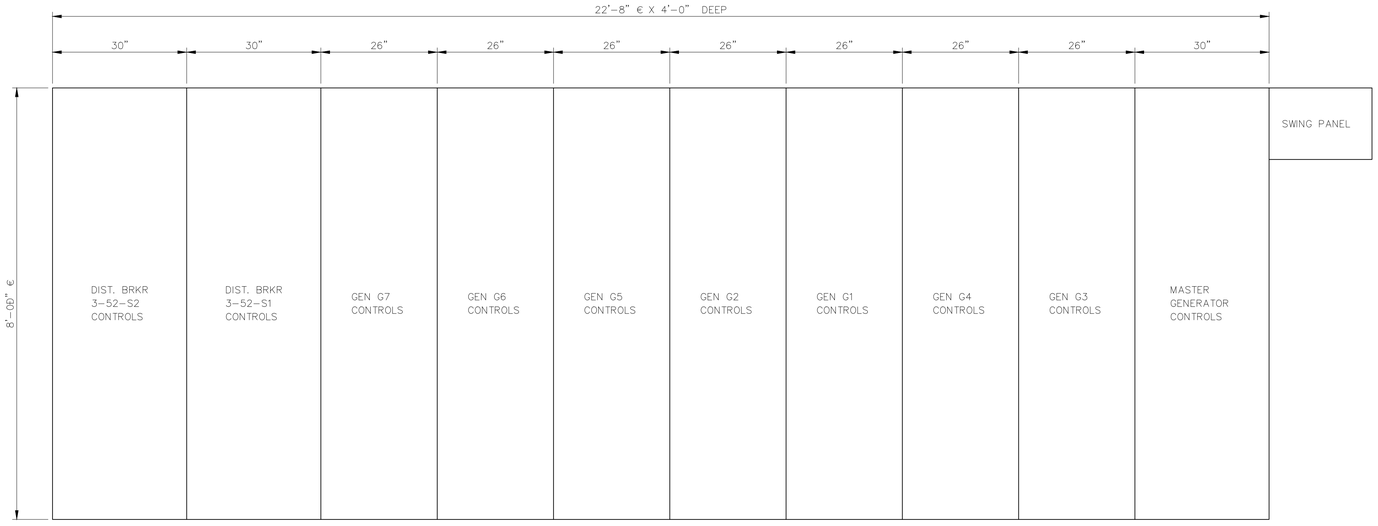

13.2KV INDOOR SWITCHGEAR NO.3 (CONTROL SECTION) – FRONT ELEVATION

SCALE: 0" = 1'-0"

NOTE:

1. FOR FRONT ELEVATIONS OF CONTROL SECTION CUBICLES, SEE DWG TE5.

RECORD DRAWING

THIS RECORD DRAWING IS NOT WARRANTED BUT IS BELIEVED TO REPRESENT CONDITIONS UPON COMPLETION OF CONSTRUCTION WITHIN REASONABLE TOLERANCES, BASED UPON THE INFORMATION FURNISHED TO THE ENGINEER PERTAINING TO CHANGES MADE DURING CONSTRUCTION.

FILE: H3B-TE04 SCALE: 1:16 09/11, 1996 at 07:37 - "13.4h (Hardware Lock)"

GREELEY AND HANSEN
ENGINEERS
1715 NORTH WESTSHORE BOULEVARD
TAMPA, FLORIDA 33607-4135

DESIGNED RZ
DRAWN GFO
CHECKED BBK

APPROVED _____ DATE _____
_____ DATE _____
GREELEY AND HANSEN, ENGINEERS

NO.	DATE	APPD	REVISION
2	8/1/96		RECORD DWG REVISIONS

SCALE
1 0 1 2 3 FT
3/4"=1'-0"

CITY OF TAMPA, FLORIDA
HOOKERS POINT WASTEWATER TREATMENT PLANT
PLANT EXPANSION
PHASE I DIVISION 5H3B
STANDBY POWER AND SLUDGE STORAGE FACILITIES

STANDBY POWER FACILITY
ELECTRICAL
13.2KV INDOOR SWITCHGEAR NO. 3
FRONT ELEVATION

PROJ NO. 202G
DWG TE4
SHEET
DATE DECEMBER 1991 REV 2

5H3B_0TE-004

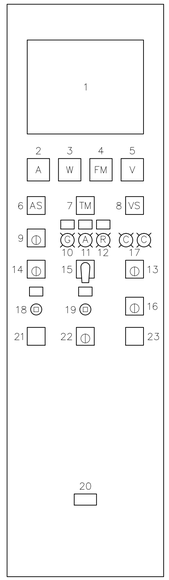

TYPICAL GENERATOR CONTROL CUBICLE FRONT ELEVATION

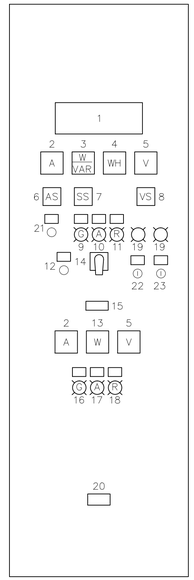

TYPICAL DISTRIBUTION BREAKER CONTROL CUBICLE – FRONT ELEVATION

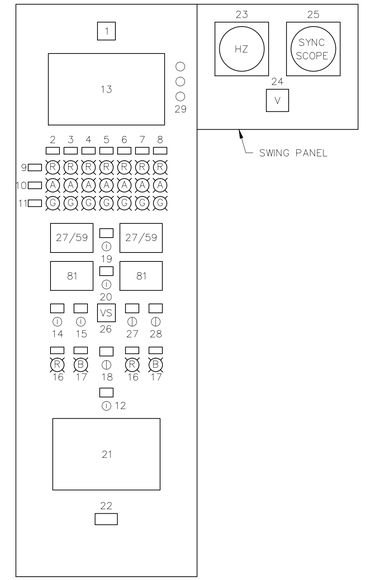

MASTER GENERATOR CONTROL CUBICLE FRONT ELEVATION

GENERATOR CONTROL CUBICLE LEGEND

TAG	DEVICE	NAMEPLATE
1	ANNUNCIATOR	–
2	AMMETER	–
3	KILOWATT METER	–
4	FREQUENCY METER	–
5	KILOVOLT METER	–
6	AMMETER SWITCH	–
7	RUNNING TIME METER	–
8	VOLTMETER SWITCH	–
9	ENGINE SELECTOR SWITCH	LOCKOUT/RESET–OFF–AUTO–RUN
10	GENERATOR BREAKER INDICATING LIGHT (GREEN)	OPEN
11	GENERATOR BREAKER INDICATING LIGHT (AMBER)	TRIPPED
12	GENERATOR BREAKER INDICATING LIGHT (RED)	CLOSED
13	MANUAL SYNCHRONIZING SELECTOR SWITCH	MAN. SYNC. ON–OFF
Ú 14	VOLTAGE CONTROL SELECTOR SWITCH	AUTO–MANUAL
15	GENERATOR BREAKER CONTROL SWITCH	TRIP–CLOSE
16	AGLC BASE LOAD SELECTOR SWITCH	OFF–ON
17	SYNCHRONIZING INDICATING LIGHTS	SYNC LIGHTS
Ú 18	VOLTAGE ADJUSTMENT RHEOSTAT	VOLTAGE, RAISE–LOWER
Ú 19	GOVERNOR SPEED ADJUSTMENT RHEOSTAT	GOV SPEED, INCREASE–DECREASE
Ú 19	GOVERNOR SPEED ADJUSTMENT SWITCH	GOV SPEED, INCREASE–DECREASE
20	NAMEPLATE	GENERATOR G (NO.) CONTROLS
Ú 21	LOCAL–REMOTE CONTROL SELECTOR SWITCH	LOCAL–REMOTE
Ú 22	TURBINE TEMPERATURE METER	–
Ú 23	TURBINE SPEED METER	–

DISTRIBUTION BREAKER CONTROL CUBICLE LEGEND

TAG	DEVICE	NAMEPLATE
1	ANNUNCIATOR	–
2	AMMETER	–
3	KILOWATT/VAR METER	–
4	KILOWATTHOUR METER	–
5	KILOVOLT METER	–
6	AMMETER SWITCH	–
7	KW/VAR SELECTOR SWITCH	–
8	VOLTMETER SWITCH	–
9	DISTRIBUTION BREAKER INDICATING LIGHT (GREEN)	OPEN
10	DISTRIBUTION BREAKER INDICATING LIGHT (AMBER)	TRIPPED
11	DISTRIBUTION BREAKER INDICATING LIGHT (RED)	CLOSED
12	SYNCHRONIZER OPERATING MODE SELECTOR SW	–
13	KILOWATT METER	–
14	DISTRIBUTION BREAKER CONTROL SWITCH	TRIP–CLOSE
15	NAMEPLATE	TECO LINE(NO.) MAIN BRKR 1–52(NO.)
16	MAIN BRKR INDICATING LIGHT (GREEN)	OPEN
17	MAIN BRKR INDICATING LIGHT (AMBER)	TRIPPED
18	MAIN BRKR INDICATING LIGHT (RED)	CLOSED
19	SYNCHRONIZING INDICATING LIGHTS	SYNC LIGHTS
20	NAMEPLATE	DIST BRKR 3–52–S(NO.) CONTROLS
21	PUSHBUTTON	FAIL TO SYNC RESET
22	MODE SELECTOR SWITCH	RUN–CHECK–PERMISSIVE–OFF
23	OPERATION SELECTOR SWITCH	CONTROL MODE AUTO–MANUAL

MASTER GENERATOR CONTROL CUBICLE LEGEND

TAG	DEVICE	NAMEPLATE
1	ALARM HORN	–
2	NAMEPLATE	GENERATOR G7
3	NAMEPLATE	GENERATOR G6
4	NAMEPLATE	GENERATOR G5
5	NAMEPLATE	GENERATOR G4
6	NAMEPLATE	GENERATOR G3
7	NAMEPLATE	GENERATOR G2
8	NAMEPLATE	GENERATOR G1
9	INDICATING LIGHT (RED)	ON LINE
10	INDICATING LIGHT (AMBER)	LOCKED OUT
11	INDICATING (GREEN)	READY TO LOAD
12	LOADING SEQUENCE SELECTOR SWITCH	3–52–S1 – 3–52–S2
13	ANNUNCIATOR	–
14	DUTY SELECTOR SWITCH	GEN BUS 1, LOAD TEST–NORMAL–STANDBY SERVICE
15	DUTY SELECTOR SW	GEN BUS 1, LOAD TEST–NORMAL–STANDBY SERVICE
16	INDICATING LIGHT (RED)	TECO LINE 1 (2) AVAILABLE
17	INDICATING LIGHT (BLUE)	TECO LINE 1 (2) FAILURE
18	MASTER CONTROL MODE SELECTOR SW	CONTROL MODE, AUTO–MANUAL
19	TRANSFER TO TECO SELECTOR SW	TECO LINE NO. 1 – RESTORE
20	TRANSFER TO TECO SELECTOR SWITCH	TECO LINE NO. 2 – RESTORE
21	PLC REGISTER ACCESS PANEL	–
22	NAMEPLATE	MASTER GENERATOR CONTROLS
23	FREQUENCY METER	–
24	KILOVOLT METER	–
25	SYNCHROSCOPE	–
26	VOLTMETER SWITCH	–
27	SYNC SCOPE SELECTOR SW	GEN BUS 1 – GEN BUS 2
28	SYNC SCOPE SELECTOR SW	GENERATORS – TECO 1 – TECO 2
29	ANNUNCIATOR PUSHBUTTONS	SILENCE, ACKNOWLEDGE AND RESET

Ú APPLIES TO EXISTING TURBINE GENERATORS G–1 AND G–2 ONLY.
Ú OMIT FOR EXISTING TURBINE GENERATORS G–1 AND G–2.

RECORD DRAWING

THIS RECORD DRAWING IS NOT WARRANTED BUT IS BELIEVED TO REPRESENT CONDITIONS UPON COMPLETION OF CONSTRUCTION WITHIN REASONABLE TOLERANCES, BASED UPON THE INFORMATION FURNISHED TO THE ENGINEER PERTAINING TO CHANGES MADE DURING CONSTRUCTION.

FILE: H3B-TE05 SCALE: 1:1 09/11, 1996 at 07:43 – *13_c4h (Hardware Lock)*

GREELEY AND HANSEN
ENGINEERS
1715 NORTH WESTSHORE BOULEVARD
TAMPA, FLORIDA 33607–4135

DESIGNED RZ
DRAWN GFO
CHECKED BBK

APPROVED _____ DATE _____
_____ DATE _____
GREELEY AND HANSEN, ENGINEERS

NO.	DATE	APPD	REVISION
3	8/1/96		RECORD DWG REVISIONS

SCALE
NO SCALE

CITY OF TAMPA, FLORIDA
HOOKERS POINT WASTEWATER TREATMENT PLANT
PLANT EXPANSION
PHASE I DIVISION 5H3B
STANDBY POWER AND SLUDGE STORAGE FACILITIES

STANDBY FACILTY
ELECTRICAL
13.2KV INDOOR SWITCHGEAR NO.3
DETAILS

PROJ NO. 202G
DWG TE5
SHEET
DATE DECEMBER 1991 REV 3

5H3B_0TE-005

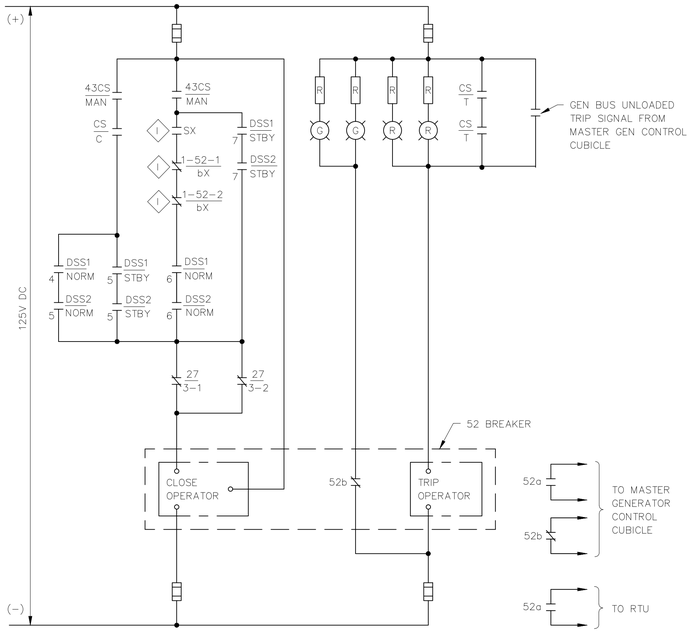

13.2KV INDOOR SWITCHGEAR NO. 3
TIE BREAKER 3-52-TIE CONTROL CIRCUIT

BREAKER CONTROL SWITCH 'CS'					
CONTACTS HANDLE END		POSITION CLOSE	POSITION NORMAL	POSITION TRIP	FUNCTION
1 2	1	X			CLOSE CIRCUIT
	2	X			SPARE
3 4	3			X	TRIP CIRCUIT
	4			X	
5 6	5	X	X		SPARE
	6		X	X	

X – INDICATES CONTACT CLOSED
(SPRING RETURN FROM CLOSE AND TRIP TO NORMAL)

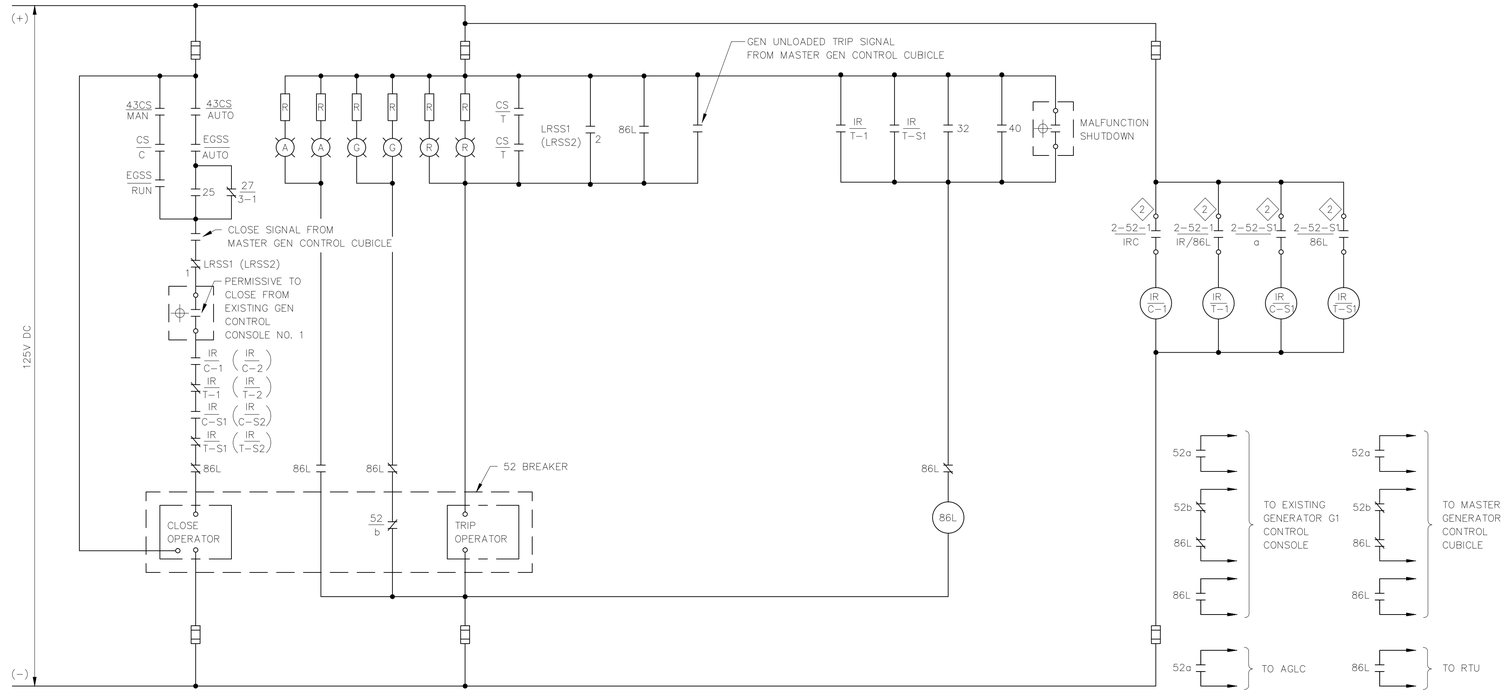

13.2KV INDOOR SWITCHGEAR NO. 3 – GENERATOR NO. 1
MAIN BREAKER 3-52-G1 CONTROL CIRCUIT
(SIMILAR FOR GENERATOR NO. 2 MAIN BREAKER 3-52-G2)

13.2 KV SWITCHGEAR NO. 3 GENERATOR G1 (G2) CONTROL CUBICLE			
LOCAL – REMOTE SELECTOR SWITCH LRSS1 (LRSS2)			
CONTACT NO.	POSITION LOCAL	POSITION REMOTE	FUNCTION
1	X		3-52-G1 (G2) CLOSE CIRCUIT
2		X	3-52-G1 (G2) TRIP CIRCUIT
3	X		2-52-1 (2) CLOSE CIRCUIT
4		X	2-52-1 (2) TRIP CIRCUIT
5	X		2-52-S1 (S2) CLOSE CIRCUIT
6		X	2-52-S1 (S2) TRIP CIRCUIT
7	X		SPARE
8		X	SPARE
9	X		SPARE
10		X	SPARE

X – INDICATES CONTACT CLOSED

NOTE:
"LOCAL" – DENOTES CONTROL AT 13.2 SWITCHGEAR NO. 3
"REMOTE" – DENOTES CONTROL AT EXISTING GENERATOR NO. 1 (2) CONTROL CONSOLE

13.2 KV SWITCHGEAR NO. 3 MASTER GENERATOR CONTROL CUBICLE				
GENERATOR BUS NO. 1 (2) DUTY SELECTOR SWITCH DSS1 (DSS2)				
CONTACT NO.	POSITION LOAD TEST	POSITION NORMAL	POSITION STANDBY SERVICE	FUNCTION
1	X			EXERCISING GENERATORS AUTO START CIRCUIT
2		X		LOSS OF UTILITY GENERATORS AUTO START CIRCUIT
3			X	TECO STANDBY POWER PROGRAM GENERATORS AUTO START CIRCUIT
4	G	X		TIE BREAKER 3-52-TIE MANUAL CLOSE CIRCUIT
5			X	TIE BREAKER 3-52-TIE MANUAL CLOSE CIRCUIT
6		X		TIE BREAKER 3-52-TIE AUTO CLOSE CIRCUIT
7			X	TIE BREAKER 3-52-TIE AUTO CLOSE CIRCUIT
8	X			DISTRIBUTION BREAKER 3-52-S1 (S2) TRIP CIRCUIT
9	X			SPARE
10		X		SPARE
11			X	SPARE

X – INDICATES CONTACT CLOSED

NOTE:
IN ADDITION TO THE CONTACTS SHOWN, PROVIDE ALL CONTACTS REQUIRED TO ACCOMPLISH THE OPERATIONAL SEQUENCES AND INTERLOCKS DESCRIBED IN THE SPECIFICATIONS

SYMBOLS

1 – DENOTES DEVICE LOCATED IN EXISTING 13.2 KV SWGR NO. 1

2 – DENOTES DEVICE LOCATED IN EXISTING 13.2 KV SWGR NO. 2

3 – DENOTES DEVICE LOCATED IN 13.2 KV SWGR NO. 3

– DENOTES DEVICE LOCATED IN EXISTING GENERATOR CONTROL CONSOLE IN MAIN PUMPING STATION

RECORD DRAWING

THIS RECORD DRAWING IS NOT WARRANTED BUT IS BELIEVED TO REPRESENT CONDITIONS UPON COMPLETION OF CONSTRUCTION WITHIN REASONABLE TOLERANCES, BASED UPON THE INFORMATION FURNISHED TO THE ENGINEER PERTAINING TO CHANGES MADE DURING CONSTRUCTION.

GREELEY AND HANSEN
ENGINEERS
1715 NORTH WESTSHORE BOULEVARD
TAMPA, FLORIDA 33607-4135

DESIGNED RZ
DRAWN SK, LAL
CHECKED BBK

APPROVED _____ DATE _____
_____ DATE _____
GREELEY AND HANSEN, ENGINEERS

NO.	DATE	APPD	REVISION
4	8/1/96		RECORD DWG REVISIONS

SCALE: NO SCALE

CITY OF TAMPA, FLORIDA
HOOKERS POINT WASTEWATER TREATMENT PLANT
PLANT EXPANSION
PHASE I DIVISION 5H3B
STANDBY POWER AND SLUDGE STORAGE FACILITIES

STANDBY FACILITY
ELECTRICAL
SCHEMATIC DIAGRAMS

PROJ NO. 202G
DWG TE6
SHEET
DATE DECEMBER 1991 REV 4

5H3B_0TE-006

FILE: H3B-TE06 SCALE: 1:1 09/11, 1996 at 07:53 – *13_c4h (Hardware Lock)*

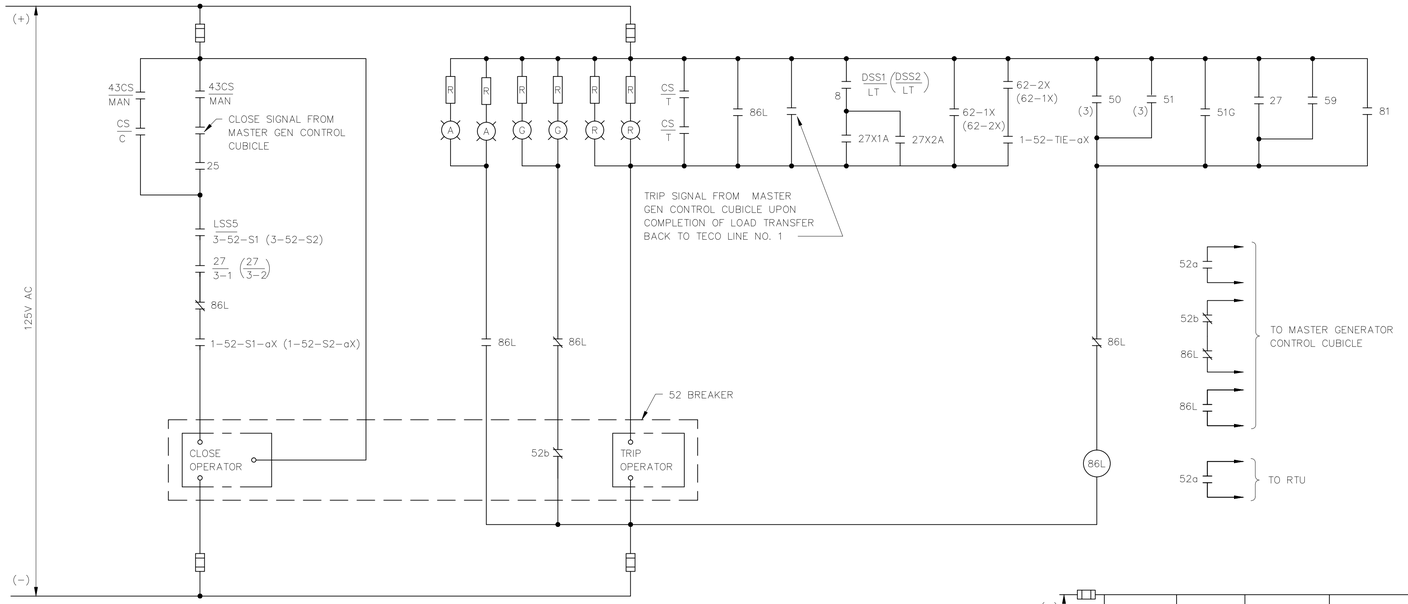

13.2KV SWITCHGEAR NO. 3 – DISTRIBUTION BREAKER 3-52-S1 CONTROL CIRCUIT

(SIMILAR FOR DISTRIBUTION BREAKER 3-52-S2)

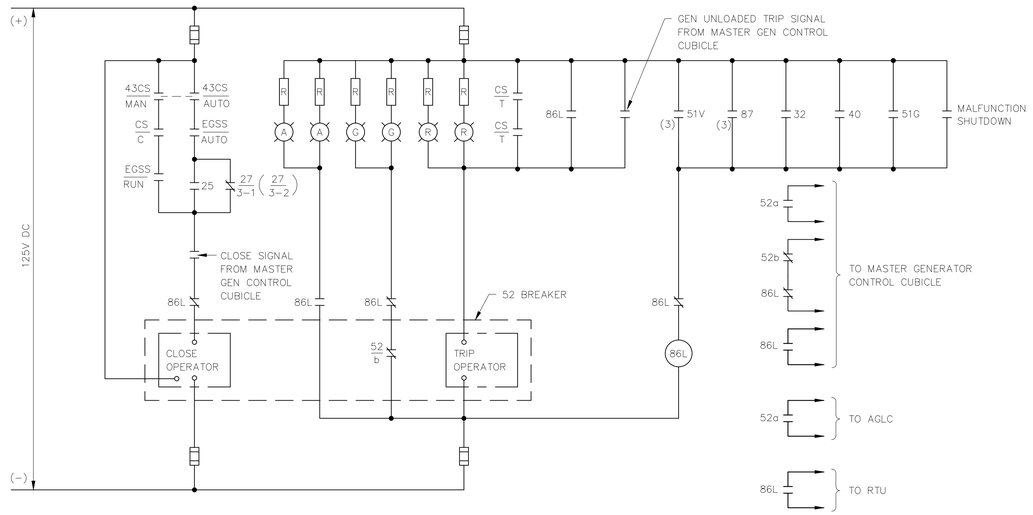

13.2KV INDOOR SWITCHGEAR NO. 3 – GENERATOR NO. 3 MAIN BREAKER 3-52-G3 CONTROL CIRCUIT

SAME FOR GENERATOR NO. 4 MAIN BREAKER 3-52-G4
(SIMILAR FOR GENERATORS NO. 5, 6 AND FUTURE 7 MAIN BREAKERS 3-52-G5, 3-52-G6 AND 3-52-G7)

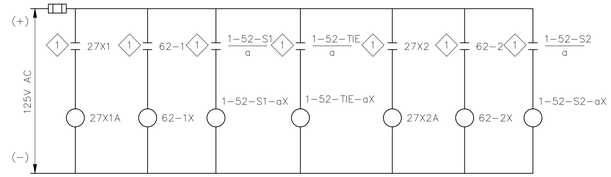

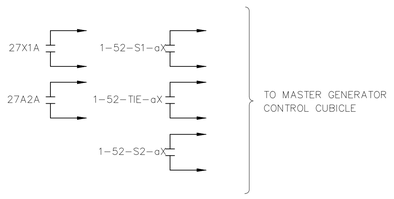

SWITCHGEAR NO. 3 INTERPOSING RELAYS

G

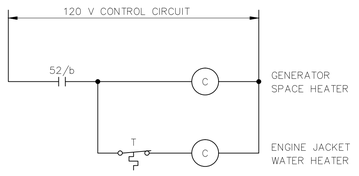

GENERATOR SPACE HEATER ENGINE JACKET WATER HEATER

SYMBOLS

◇1 – DENOTES DEVICE LOCATED IN EXISTING 13.2 KV SWGR NO. 1

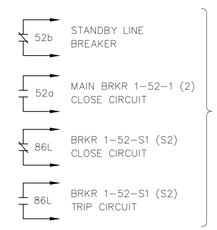

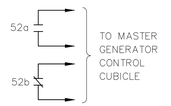

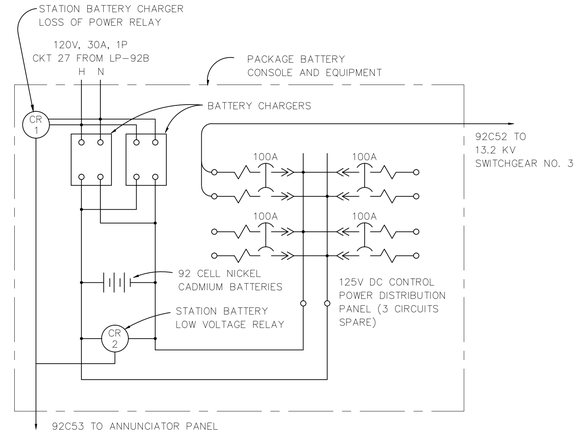

125V DC BATTERY CONSOLE

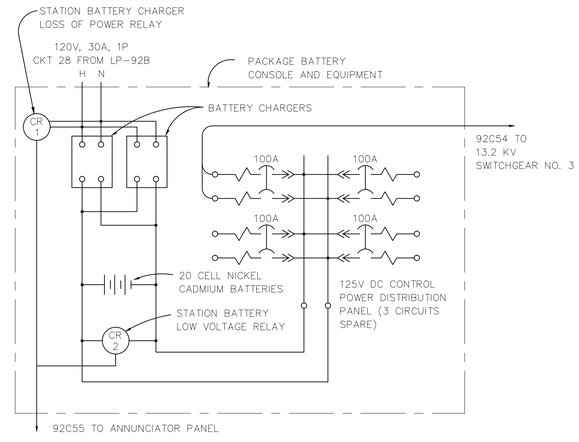

24V DC BATTERY CONSOLE

RECORD DRAWING

THIS RECORD DRAWING IS NOT WARRANTED BUT IS BELIEVED TO REPRESENT CONDITIONS UPON COMPLETION OF CONSTRUCTION WITHIN REASONABLE TOLERANCES, BASED UPON THE INFORMATION FURNISHED TO THE ENGINEER PERTAINING TO CHANGES MADE DURING CONSTRUCTION.

H3B-TE07.DWG 03-20-96 11:00

GREELEY AND HANSEN
ENGINEERS
1715 NORTH WESTSHORE BOULEVARD
TAMPA, FLORIDA 33607-4135

DESIGNED RZ
DRAWN LAL
CHECKED BBK

APPROVED _____ DATE _____
_____ DATE _____
GREELEY AND HANSEN, ENGINEERS

NO.	DATE	APPD	REVISION
4	8/2/96		RECORD DWG REVISIONS

SCALE
NO SCALE

CITY OF TAMPA, FLORIDA
HOOKERS POINT WASTEWATER TREATMENT PLANT
PLANT EXPANSION
PHASE I DIVISION 5H3B
STANDBY POWER AND SLUDGE STORAGE FACILITIES

STANDBY POWER FACILITY
ELECTRICAL
SCEMATIC DIAGRAMS

See Supplemental Drawing SD-53

PROJ NO. 202G
DWG TE7
SHEET
DATE DECEMBER 1991 REV 4

5H3B_0TE-007

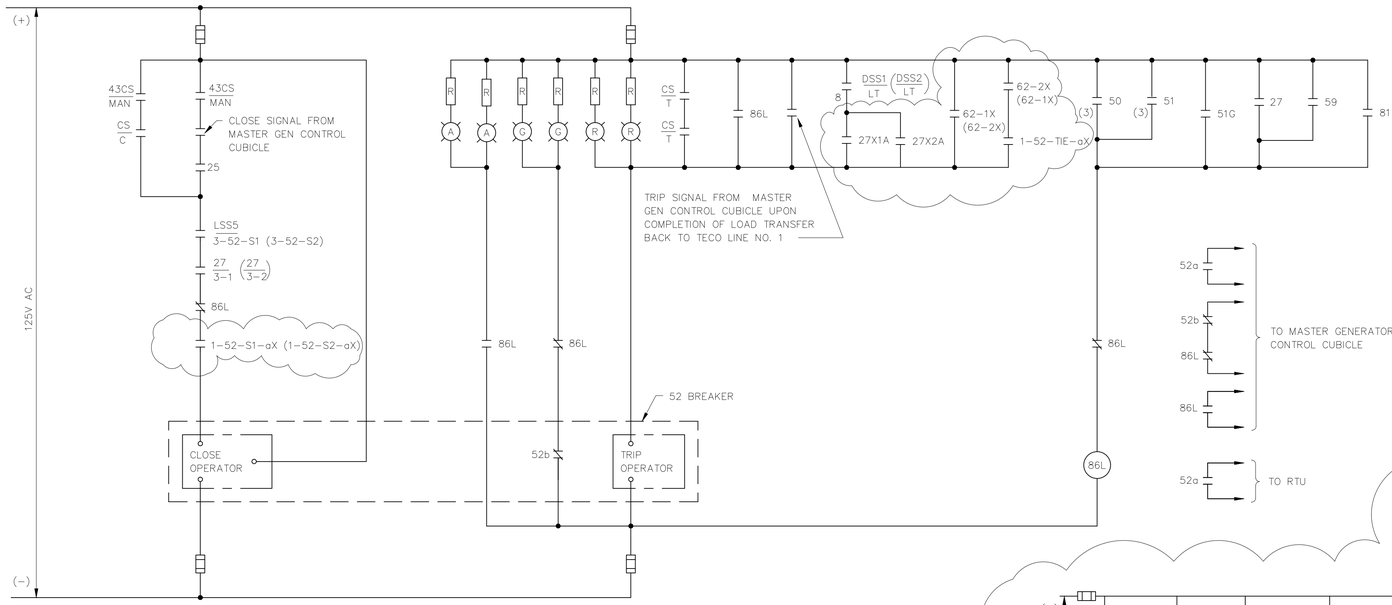

13.2KV SWITCHGEAR NO. 3 – DISTRIBUTION BREAKER 3-52-S1 CONTROL CIRCUIT

(SIMILAR FOR DISTRIBUTION BREAKER 3-52-S2)

13.2KV INDOOR SWITCHGEAR NO. 3 – GENERATOR NO. 3 MAIN BREAKER 3-52-G3 CONTROL CIRCUIT

SAME FOR GENERATOR NO. 4 MAIN BREAKER 3-52-G4
(SIMILAR FOR GENERATORS NO. 5, 6 AND FUTURE 7 MAIN BREAKERS 3-52-G5, 3-52-G6 AND 3-52-G7)

SWITCHGEAR NO. 3 INTERPOSING RELAYS

GENERATOR SPACE HEATER ENGINE JACKET WATER HEATER

125V DC BATTERY CONSOLE

24V DC BATTERY CONSOLE

REVISES DWG TE7

GREELEY AND HANSEN ENGINEERS 4350 WEST CYPRESS STREET TAMPA, FLORIDA 33607-4135	DESIGNED RZ DRAWN LAL CHECKED BBK	APPROVED _____ DATE _____ _____ DATE _____ GREELEY AND HANSEN, ENGINEERS	1 2/95 BBK REVISED CONTACT NUMBERS NO. DATE APPD REVISION	SCALE NO SCALE
CITY OF TAMPA, FLORIDA HOOKERS POINT WASTEWATER TREATMENT PLANT PLANT EXPANSION PHASE I DIVISION 5H3B STANDBY POWER AND SLUDGE STORAGE FACILITIES	STANDBY POWER FACILITY ELECTRICAL SCHEMATIC DIAGRAMS	PROJ NO. 202G DWG SD-53 SHEET DATE DECEMBER 1991 REV 1		

5H3B_0TE-007A

FILE: M:\ACAD\BY\DGN\5H3BSD53.DGN SCALE: 1:1 02-04, 1995 at 10:12 PM BY: dlf

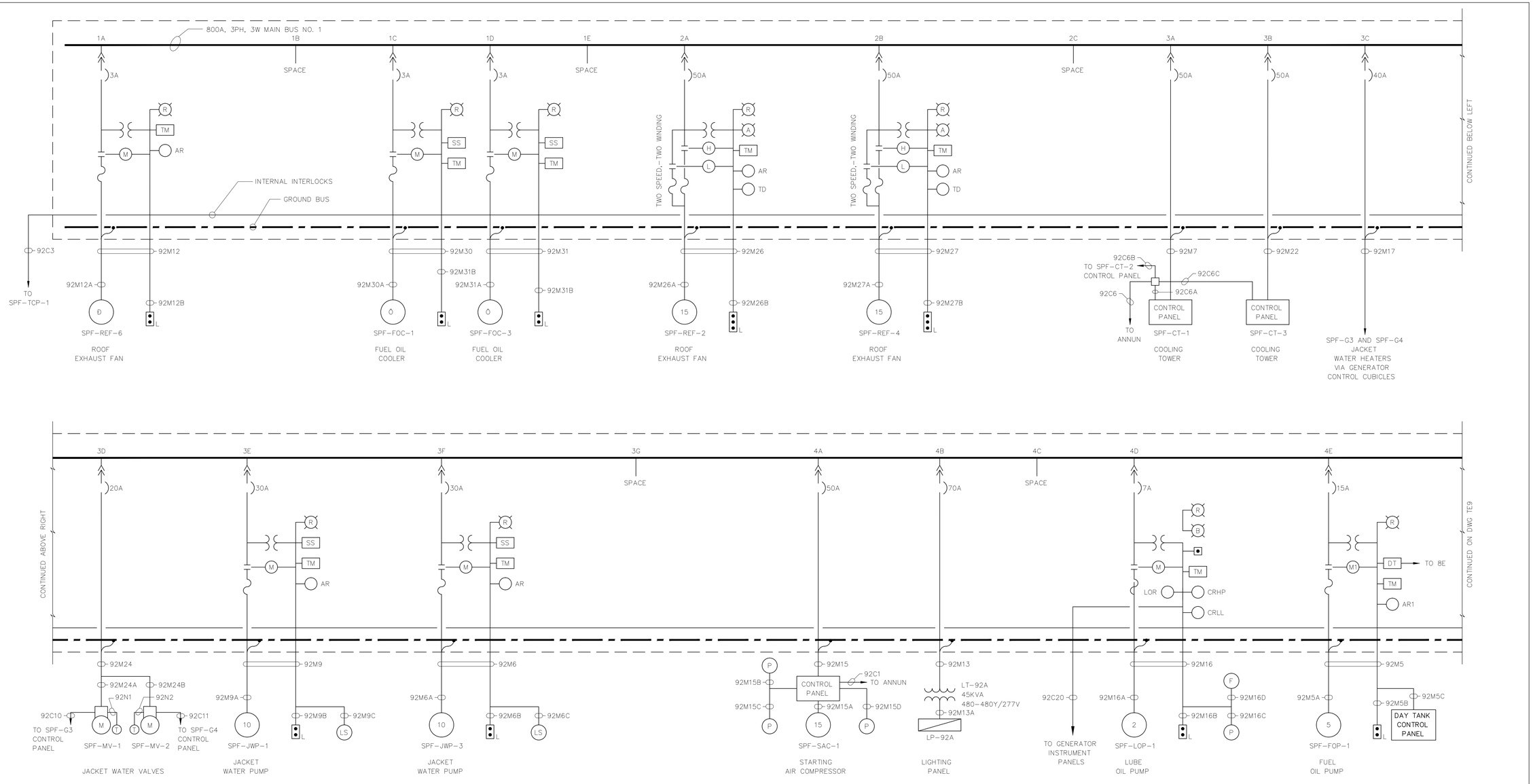

RECORD DRAWING

THIS RECORD DRAWING IS NOT WARRANTED BUT IS BELIEVED TO REPRESENT CONDITIONS UPON COMPLETION OF CONSTRUCTION WITHIN REASONABLE TOLERANCES, BASED UPON THE INFORMATION FURNISHED TO THE ENGINEER PERTAINING TO CHANGES MADE DURING CONSTRUCTION.

H:\5H-TE08.DWG 03-20-98 11:29

GREELEY AND HANSEN
ENGINEERS
1715 NORTH WESTSHORE BOULEVARD
TAMPA, FLORIDA 33607-4135

DESIGNED CSC
DRAWN LCC
CHECKED BBK

APPROVED _____ DATE _____
_____ DATE _____
GREELEY AND HANSEN, ENGINEERS

NO.	DATE	APPD	REVISION
3	8/2/96		RECORD DWG REVISIONS

SCALE
NO SCALE

CITY OF TAMPA, FLORIDA
HOOKERS POINT WASTEWATER TREATMENT PLANT
PLANT EXPANSION
PHASE I DIVISION 5H3B
STANDBY POWER AND SLUDGE STORAGE FACILITIES

STANDBY POWER FACILITY
ELECTRICAL
480 VOLT MCC-92
ONE LINE DIAGRAM

See Supplemental Drawing SD-59

PROJ NO. 202G
DWG TE8
SHEET
DATE DECEMBER 1991 REV 3

5H3B_0TE-008

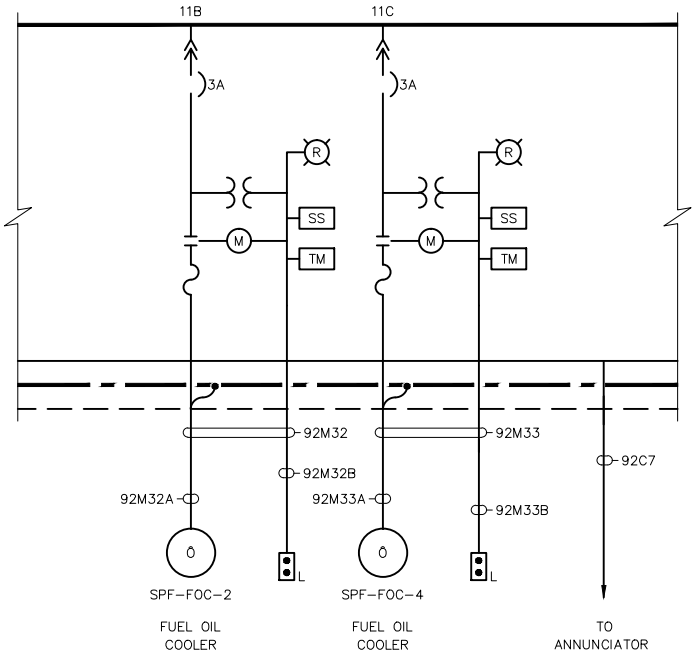

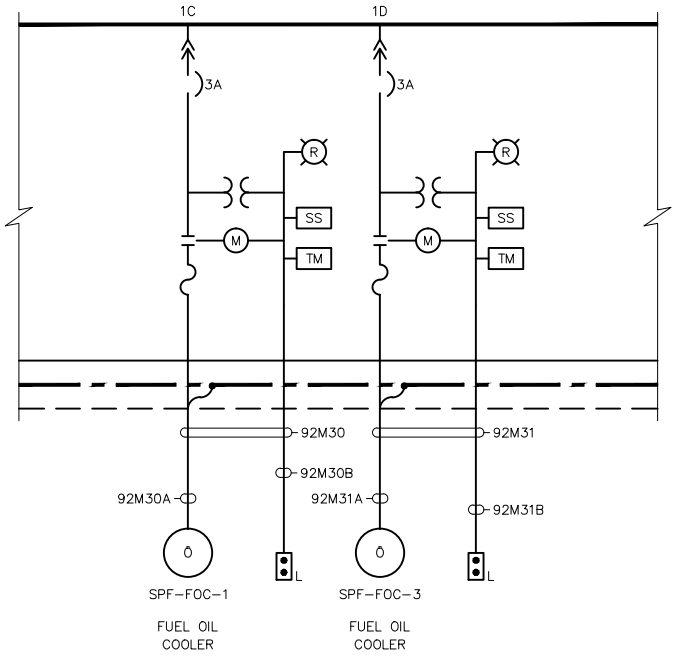

MOTOR CONTROL CENTER MCC-92
PARTIAL ONE LINE DIAGRAMS

REVISES DWG TE8 & TE10

DES MMN	CKD BBK					H.P.W.W.T.P.	
DR GR	APPD					DIVISION 5H3B	
GREELEY AND HANSEN ENGINEERS						SD-59	
TAMPA, FLORIDA 36607		NO.	DATE	APPD	REVISION	DATE JUN 1995	NO. 0

5H3B_0TE-008A

FILE: H:\AC\5H3B\SD\5H3BSD59 SCALE: 1:1i 06/15, 1995 at 14:18 *R11 c2*

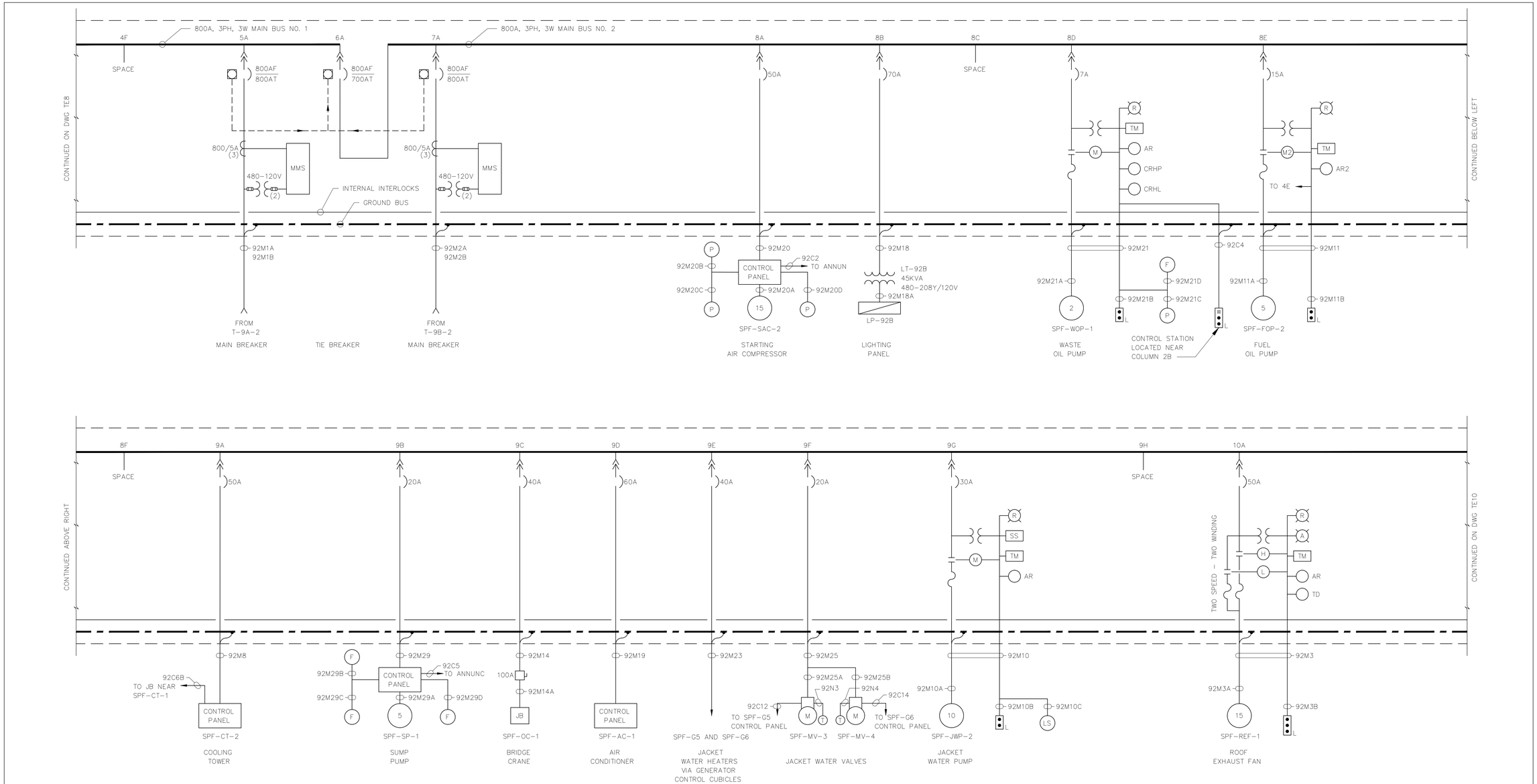

RECORD DRAWING

THIS RECORD DRAWING IS NOT WARRANTED BUT IS BELIEVED TO REPRESENT CONDITIONS UPON COMPLETION OF CONSTRUCTION WITHIN REASONABLE TOLERANCES, BASED UPON THE INFORMATION FURNISHED TO THE ENGINEER PERTAINING TO CHANGES MADE DURING CONSTRUCTION.

H3B-TE09.DWG 03-20-96 11:31

GREELEY AND HANSEN
ENGINEERS
1715 NORTH WESTSHORE BOULEVARD
TAMPA, FLORIDA 33607–4135

DESIGNED CSC
DRAWN LCC
CHECKED BBK

APPROVED
DATE
DATE
GREELEY AND HANSEN, ENGINEERS

NO.	DATE	APPD	REVISION
3	8/2/96		RECORD DWG REVISIONS

SCALE
NO SCALE

CITY OF TAMPA, FLORIDA
HOOKERS POINT WASTEWATER TREATMENT PLANT
PLANT EXPANSION
PHASE I DIVISION 5H3B
STANDBY POWER AND SLUDGE STORAGE FACILITIES

STANDBY POWER FACILITY
ELECTRICAL
480 VOLT MCC–92
ONE LINE DIAGRAM

PROJ NO. 202G
DWG TE9
SHEET
DATE DECEMBER 1991
REV 3

5H3B_0TE-009

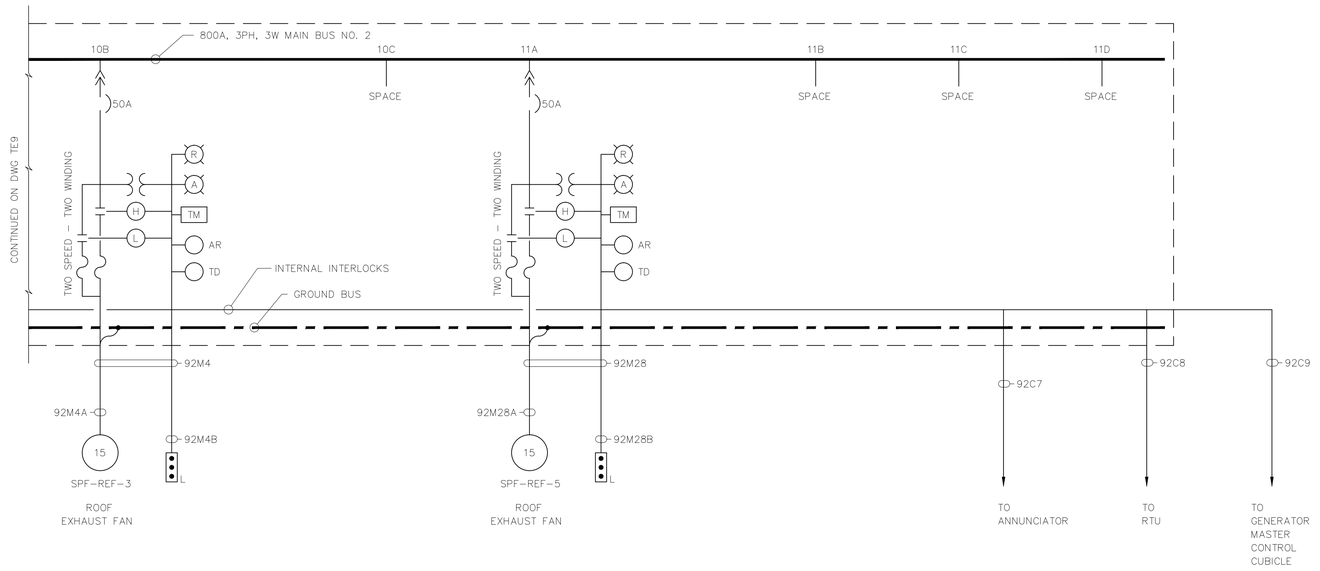

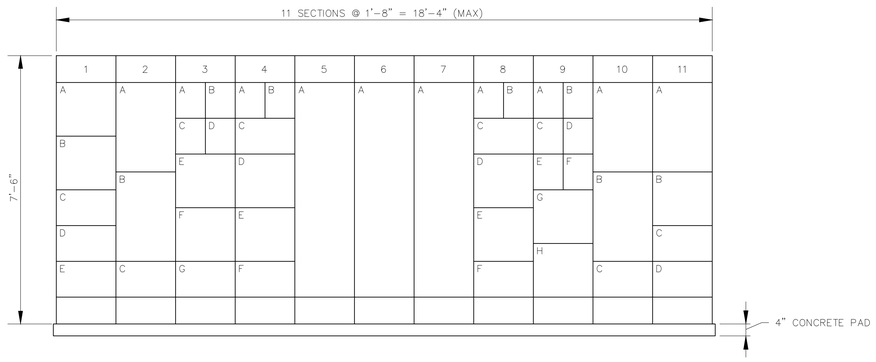

MOTOR CONTROL CENTER MCC-92 FRONT ELEVATION

NOTE: MCC DIMENSIONS AND CUBICLE ARRANGEMENTS SHOWN SHALL BE ADHERED TO. MCC STRUCTURES WHICH VARY FROM THE DIMENSIONS SHOWN OR WHICH VARY THE CUBICLE ARRANGEMENT ARE NOT ACCEPTABLE AND WILL NOT BE APPROVED.

RECORD DRAWING

THIS RECORD DRAWING IS NOT WARRANTED BUT IS BELIEVED TO REPRESENT CONDITIONS UPON COMPLETION OF CONSTRUCTION WITHIN REASONABLE TOLERANCES, BASED UPON THE INFORMATION FURNISHED TO THE ENGINEER PERTAINING TO CHANGES MADE DURING CONSTRUCTION.

FILE: H3B-TE10 SCALE: 1:1 09/11, 1996 at 09:17 – *13_c4h (Hardware Lock)*

GREELEY AND HANSEN ENGINEERS 1715 NORTH WESTSHORE BOULEVARD TAMPA, FLORIDA 33607-4135	DESIGNED CSC DRAWN GFO, LAL CHECKED BBK	APPROVED DATE DATE GREELEY AND HANSEN, ENGINEERS	3	8/2/96		RECORD DWG REVISIONS	SCALE NO SCALE	CITY OF TAMPA, FLORIDA HOOKERS POINT WASTEWATER TREATMENT PLANT PLANT EXPANSION PHASE I DIVISION 5H3B STANDBY POWER AND SLUDGE STORAGE FACILITIES	STANDBY POWER FACILITY ELECTRICAL SCHEMATIC DIAGRAMS	See Supplemental Drawing SD-59

PROJ NO.	202G
DWG	TE10
SHEET	
DATE	DECEMBER 1991
REV	3

5H3B_0TE-010

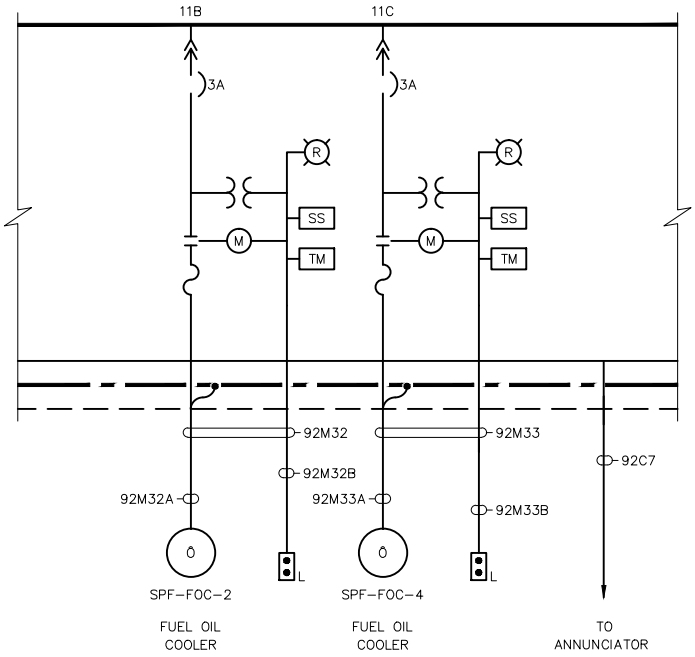

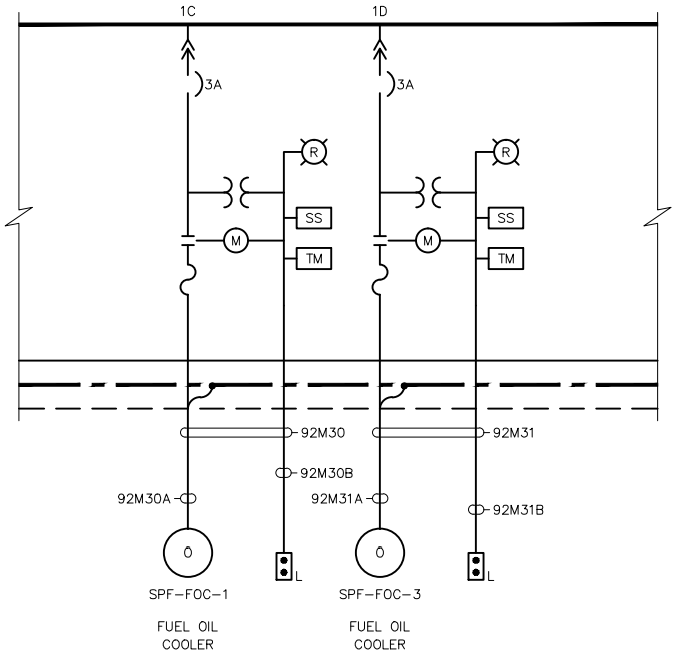

MOTOR CONTROL CENTER MCC-92
PARTIAL ONE LINE DIAGRAMS

REVISES DWG TE8 & TE10

DES MMN	CKD BBK					H.P.W.W.T.P.	
DR GR	APPD					DIVISION 5H3B	
GREELEY AND HANSEN ENGINEERS						SD-59	
TAMPA, FLORIDA 36607		NO.	DATE	APPD	REVISION	DATE JUN 1995	NO. 0

5H3B_0TE-010A

FILE: H:\AC\5H3B\SD\5H3BSD59 SCALE: 1:1i 06/15, 1995 at 14:18 *R11 c2*

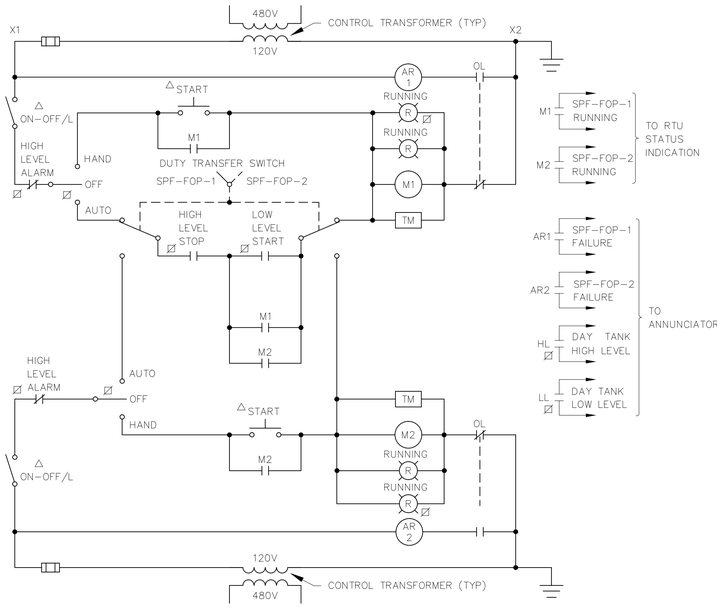

FUEL OIL PUMP SPF–FOP–1 & SFP–FOP–2

Ø DENOTES DEVICE LOCATED IN DAY TANK CONTROL PANEL

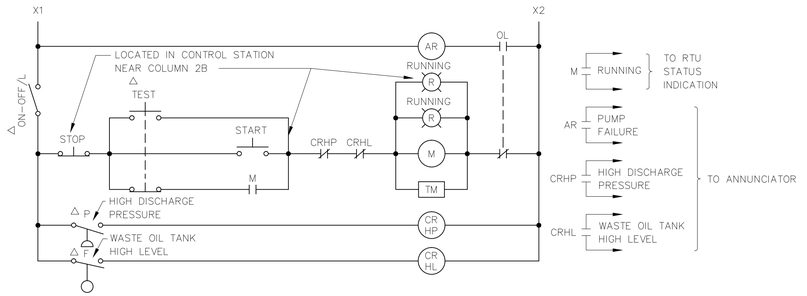

WASTE OIL PUMP SPF–WOP–1

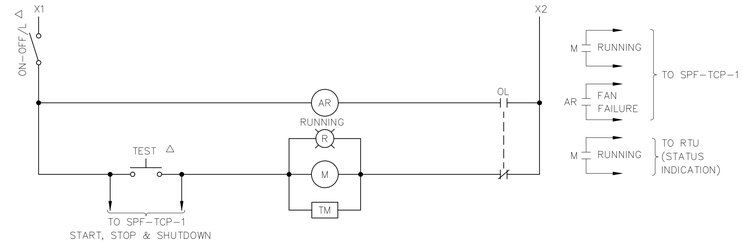

ROOF EXHAUST FAN SPF–REF–6

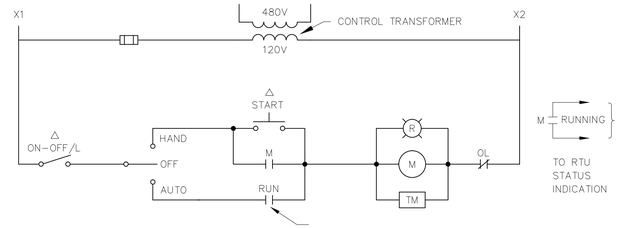

FUEL OIL COOLER SPF–FOC–1

TIPICAL FOR SPF–FOC–2, SPF–FOC–3, SPF–FOC–4 & SPF–FOC–5

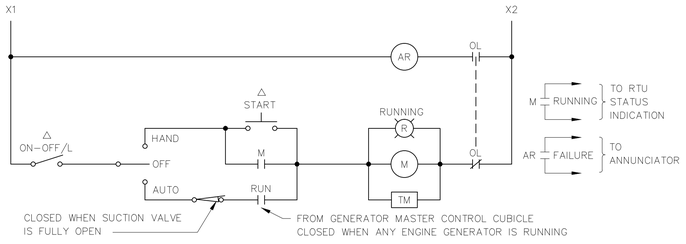

JACKET WATER PUMP SPF–JWP–1

TYPICAL FOR SPF–JWP–2 AND SPF–JWP–3

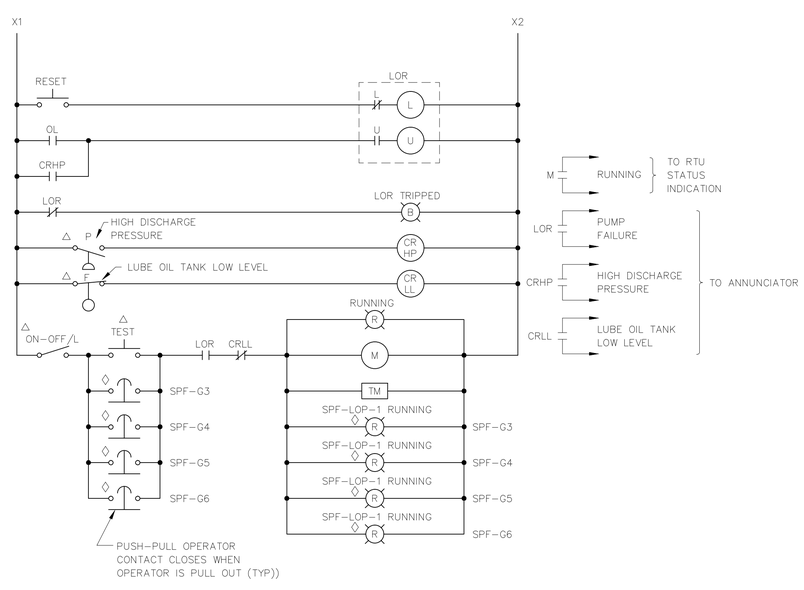

LUBE OIL PUMP SPF–LOP–1

◊ DENOTES DEVICE LOCATED IN GENERATOR INSTRUMENT PANEL

RECORD DRAWING

THIS RECORD DRAWING IS NOT WARRANTED BUT IS BELIEVED TO REPRESENT CONDITIONS UPON COMPLETION OF CONSTRUCTION WITHIN REASONABLE TOLERANCES, BASED UPON THE INFORMATION FURNISHED TO THE ENGINEER PERTAINING TO CHANGES MADE DURING CONSTRUCTION.

GREELEY AND HANSEN
ENGINEERS
1715 NORTH WESTSHORE BOULEVARD
TAMPA, FLORIDA 33607–4135

DESIGNED CSC
DRAWN GFO, LAL
CHECKED BBK

APPROVED _____ DATE _____
_____ DATE _____
GREELEY AND HANSEN, ENGINEERS

NO.	DATE	APPD	REVISION
3	8/2/96		RECORD DWG REVISIONS

SCALE
NO SCALE

CITY OF TAMPA, FLORIDA
HOOKERS POINT WASTEWATER TREATMENT PLANT
PLANT EXPANSION
PHASE I DIVISION 5H3B
STANDBY POWER AND SLUDGE STORAGE FACILITIES

STNADBY POWER FACILITY
ELECTRICAL
SCHEMATIC DIAGRAMS

See Supplemental Drawing SD-60

PROJ NO. 202G
DWG TE11
SHEET
DATE DECEMBER 1991 REV 3

5H3B_0TE-011

FILE: H3B-TE11 SCALE: 1:1 09/11, 1996 at 09:21 - *13_c4h (Hardware Lock)*

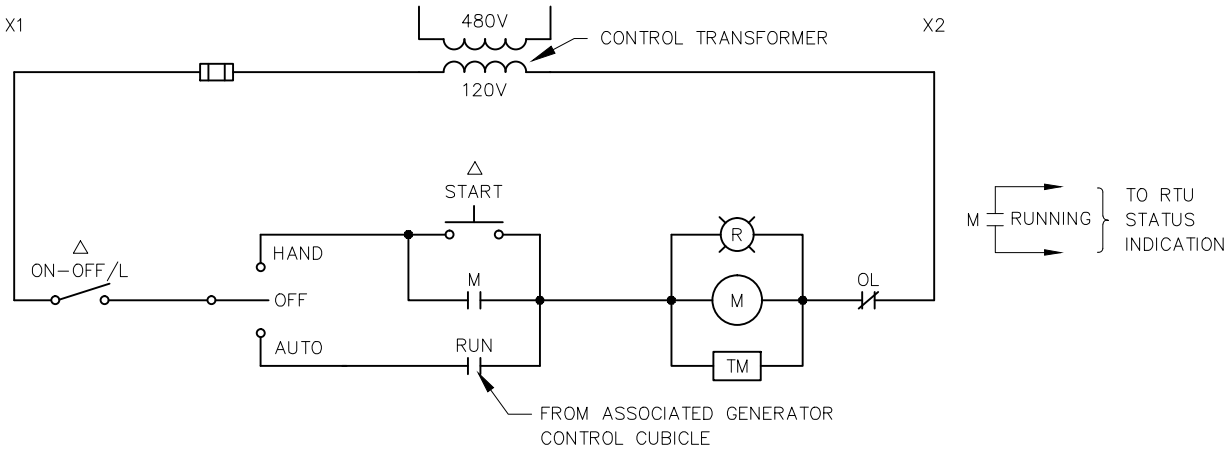

FUEL OIL COOLER SPF–FOC–1

TYPICAL FOR SPF–FOC–2, SPF–FOC–3,
SPF–FOC–4 & SPF–FOC–5

REVISES DWG TE11

DES MMN	CKD BBK					H.P.W.W.T.P.
DR GR	APPD					DIVISION 5H3B
GREELEY AND HANSEN						SD–60
ENGINEERS						
TAMPA, FLORIDA 36607		NO.	DATE	APPD	REVISION	DATE JUN 1995 NO. 0

5H3B_0TE-011A

FILE: 5H3BSD60 SCALE: 1:1i 06/15, 1995 at 09:15 *R11 c2*

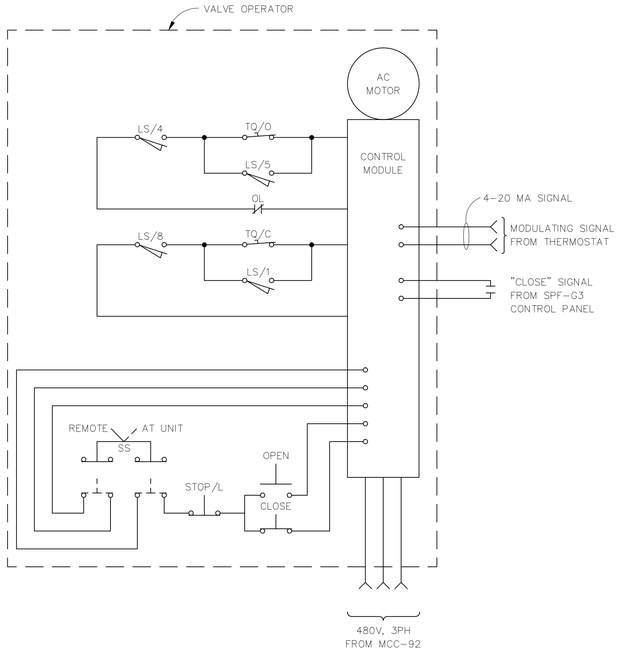

JACKET WATER VALVE – SPF-MV-1

SIMILAR FOR SPF-MV-2, SPF-MV-3 AND SPF-MV-4

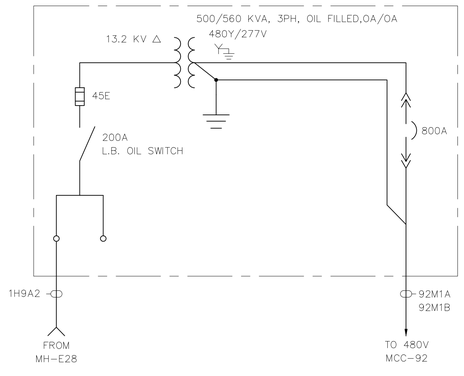

SUBSTATION TRANSFORMER T-9A-2

SIMILAR FOR T-9B-2

TYPICAL LIMIT SWITCH CONTACT DEVELOPMENT FOR MOTORIZED GATE AND VALVE OPERATORS

ROTOR NO.	CONTACT NO.	OPERATOR POSITION: FULL OPEN	OPERATOR POSITION: INTER-MEDIATE	OPERATOR POSITION: FULL CLOSED	CONTACT FUNCTION
1	1	▬	— —	— —	BYPASS CKT
	2	▬	— —	— —	AUXILIARY
	3	— —	▬	▬	INDICATOR LIGHT
	4	— —	▬	▬	FORWARD (OPEN) LIMIT
2	5	— —	— —	▬	BYPASS CKT
	6	— —	— —	▬	AUXILIARY
	7	▬	▬	— —	INDICATOR LIGHT
	8	▬	▬	— —	REVERSE (CLOSED) LIMIT
3	9	▬	▬	— —	AUXILIARY
	10	▬	▬	— —	AUXILIARY
	11	— —	— —	▬	AUXILIARY
	12	— —	— —	▬	AUXILIARY
4	13	— —	▬	▬	AUXILIARY
	14	— —	▬	▬	AUXILIARY
	15	▬	— —	— —	AUXILIARY
	16	▬	— —	— —	AUXILIARY

TQ/C – CLOSING TORQUE SWITCH
TQ/O – OPENING TORQUE SWITCH
▬ INDICATES CONTACT CLOSED
— — INDICATES CONTACT OPEN

SEE SCHEMATIC DIAGRAMS FOR FUNCTION OF THE "AUXILIARY" LIMIT SWITCH CONTACTS

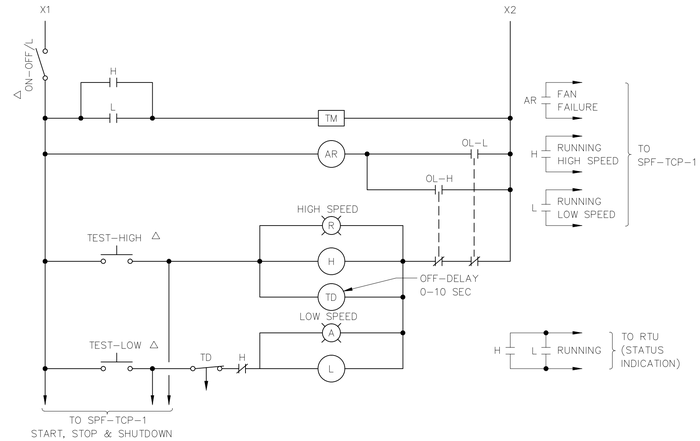

ROOF EXHAUST FAN SPF-REF-1

TYPICAL FOR SPF-REF-2 TO SPF-REF-5

RECORD DRAWING

THIS RECORD DRAWING IS NOT WARRANTED BUT IS BELIEVED TO REPRESENT CONDITIONS UPON COMPLETION OF CONSTRUCTION WITHIN REASONABLE TOLERANCES, BASED UPON THE INFORMATION FURNISHED TO THE ENGINEER PERTAINING TO CHANGES MADE DURING CONSTRUCTION.

GREELEY AND HANSEN
ENGINEERS
1715 NORTH WESTSHORE BOULEVARD
TAMPA, FLORIDA 33607-4135

DESIGNED CSC
DRAWN LAL
CHECKED BBK

APPROVED _____ DATE _____
_____ DATE _____
GREELEY AND HANSEN, ENGINEERS

NO.	DATE	APPD	REVISION
3	8/2/96		RECORD DWG REVISIONS

SCALE
NO SCALE

CITY OF TAMPA, FLORIDA
HOOKERS POINT WASTEWATER TREATMENT PLANT
PLANT EXPANSION
PHASE I DIVISION 5H3B
STANDBY POWER AND SLUDGE STORAGE FACILITIES

STANDBY POWER FACILITY
ELECTRICAL
SCHEMATIC DIAGRAMS

PROJ NO. 202G
DWG TE12
SHEET
DATE DECEMBER 1991 REV 3

5H3B_0TE-012

FILE: H3B-TE12 SCALE: 1:1 09/1, 1996 at 09:28 - *13_c4h (Hardware Lock)*

STANDBY POWER FACILITY
TRANSFORMER YARD - POWER

SCALE: 1"= 1'-0"

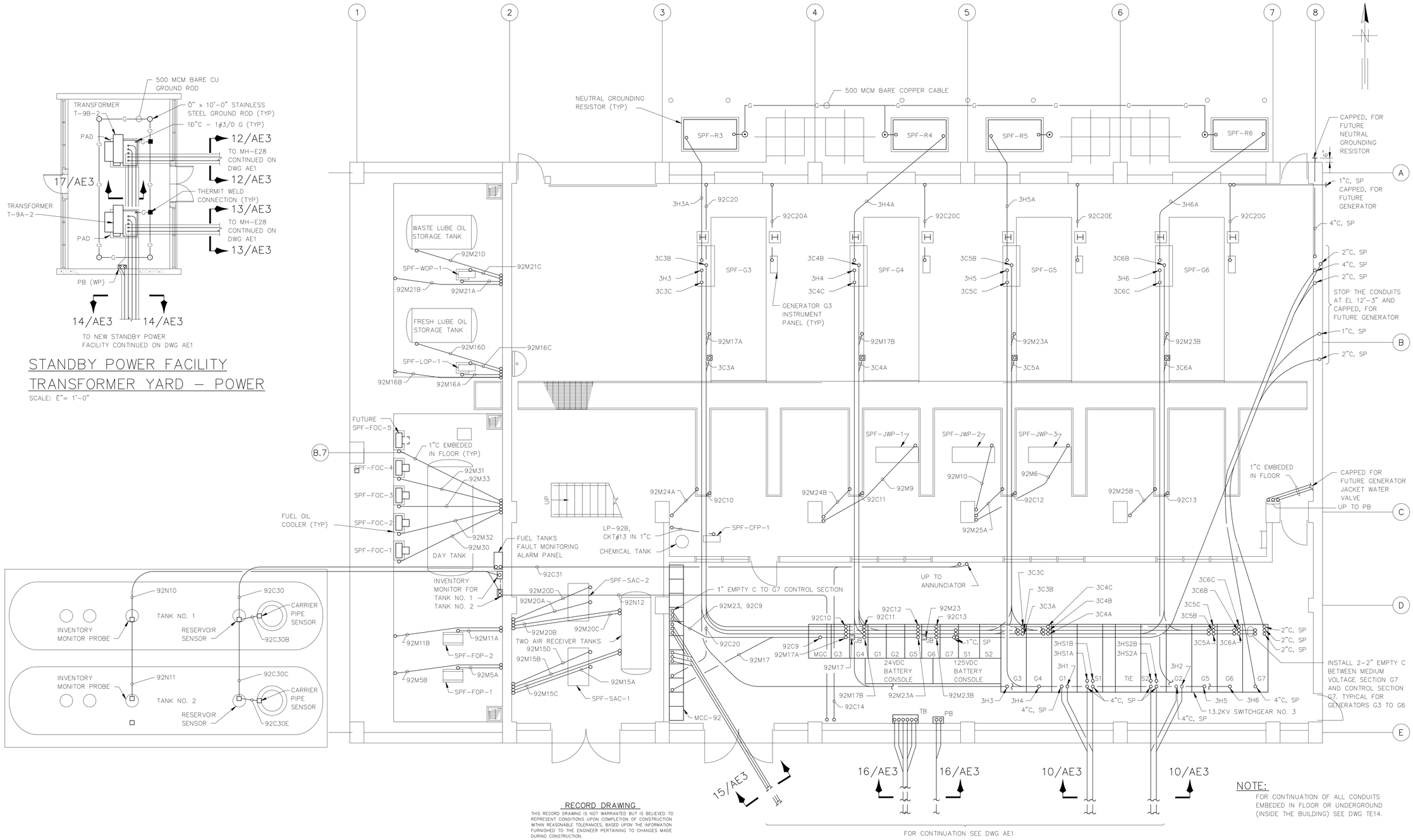

RECORD DRAWING

THIS RECORD DRAWING IS NOT WARRANTED BUT IS BELIEVED TO REPRESENT CONDITIONS UPON COMPLETION OF CONSTRUCTION WITHIN REASONABLE TOLERANCES, BASED UPON THE INFORMATION FURNISHED TO THE ENGINEER PERTAINING TO CHANGES MADE DURING CONSTRUCTION.

NOTE:

FOR CONTINUATION OF ALL CONDUITS EMBEDDED IN FLOOR OR UNDERGROUND (INSIDE THE BUILDING) SEE DWG TE14.

GREELEY AND HANSEN
ENGINEERS
1715 NORTH WESTSHORE BOULEVARD
TAMPA, FLORIDA 33607-4135

DESIGNED	GJ
DRAWN	BBK, AF
CHECKED	BBK

APPROVED _____ DATE _____

_____ DATE _____
GREELEY AND HANSEN, ENGINEERS

NO.	DATE	APPD	REVISION
5	8/7/96		RECORD DWG REVISIONS

SCALE
4 0 4 8 12 FT
3/16"=1'-0"

CITY OF TAMPA, FLORIDA
HOOKERS POINT WASTEWATER TREATMENT PLANT
PLANT EXPANSION
PHASE I DIVISION 5H3B
STANDBY POWER AND SLUDGE STORAGE FACILITIES

STANDBY POWER FACILITY
ELECTRICAL
POWER PLAN

See Supplemental Drawing SD-61

PROJ NO. 202G
DWG TE13
SHEET
DATE DECEMBER 1991 REV 5

5H3B_0TE-013

FILE: H3B-TE13 SCALE: 1:64 09/11 1996 at 09:34 - *13_cdr (Hardware Lock)*

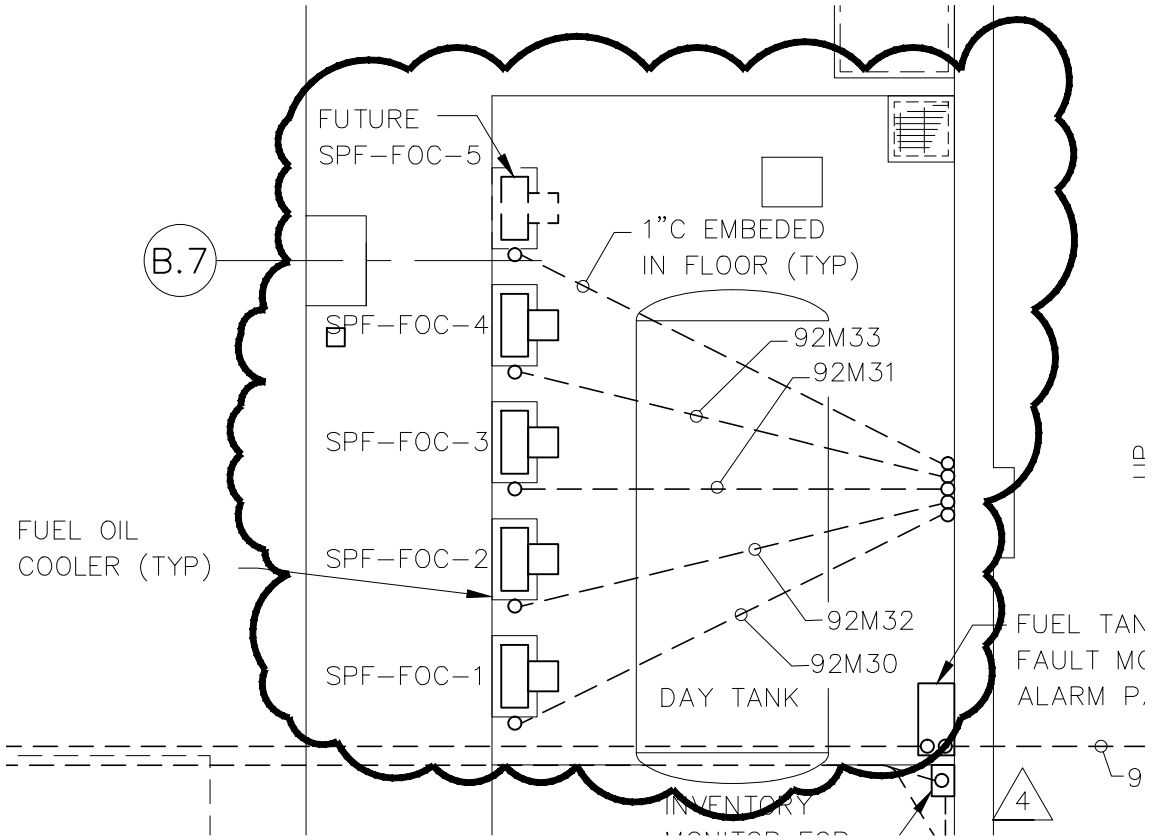

PARTIAL POWER PLAN

REVISES DWG TE13

DES MMN	CKD BBK					H.P.W.W.T.P.
DR GR	APPD					DIVISION 5H3B
GREELEY AND HANSEN ENGINEERS TAMPA, FLORIDA 36607						SD-61
		NO.	DATE	APPD	REVISION	DATE JUN 1995 NO. 0

5H3B_0TE-013A

FILE: H:\AC\5H3B\SD\5H3SD61 SCALE: 1:1i 06/15, 1995 at 09:21 *R11 c2*

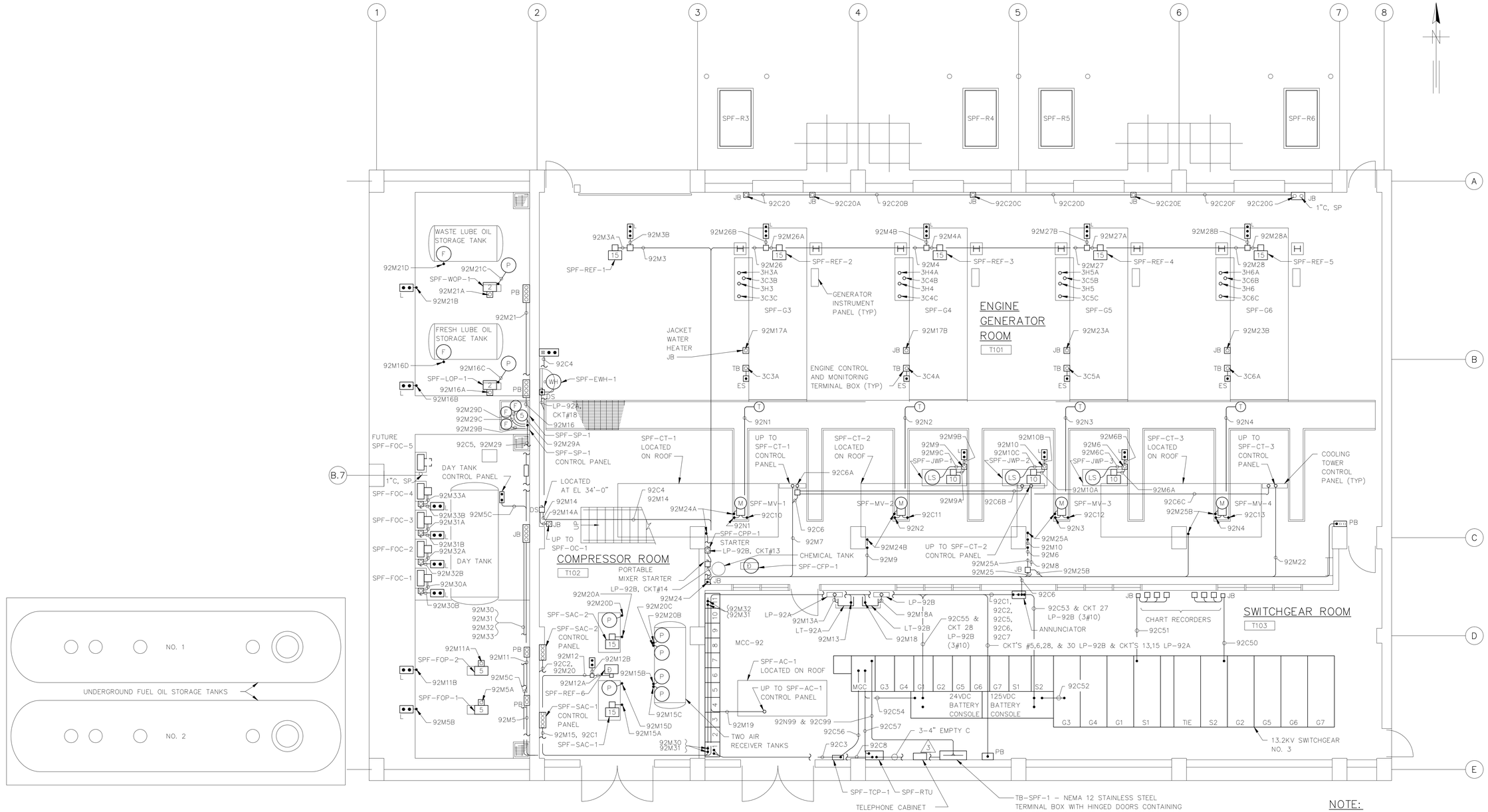

NOTE:

FOR CONTINUATION OF ALL CONDUITS, SEE DWG TE13

RECORD DRAWING

THIS RECORD DRAWING IS NOT WARRANTED BUT IS BELIEVED TO REPRESENT CONDITIONS UPON COMPLETION OF CONSTRUCTION WITHIN REASONABLE TOLERANCES, BASED UPON THE INFORMATION FURNISHED TO THE ENGINEER PERTAINING TO CHANGES MADE DURING CONSTRUCTION.

GREELEY AND HANSEN ENGINEERS 1715 NORTH WESTSHORE BOULEVARD TAMPA, FLORIDA 33607-4135	DESIGNED GJ DRAWN BBK, AF CHECKED BBK	APPROVED _____ DATE _____ _____ DATE _____ GREELEY AND HANSEN, ENGINEERS	4 | 8/2/96 | | RECORD DWG REVISIONS NO. | DATE | APPD | REVISION	SCALE 4 0 4 8 12 FT 3/16"=1'-0"	CITY OF TAMPA, FLORIDA HOOKERS POINT WASTEWATER TREATMENT PLANT PLANT EXPANSION PHASE I DIVISION 5H3B STANDBY POWER AND SLUDGE STORAGE FACILITIES	STANDBY POWER FACILITY ELECTRICAL POWER PLAN See Supplemental Drawing SD-62	PROJ NO. 202G DWG TE14 SHEET DATE DECEMBER 1991 REV 4

5H3B_0TE-014

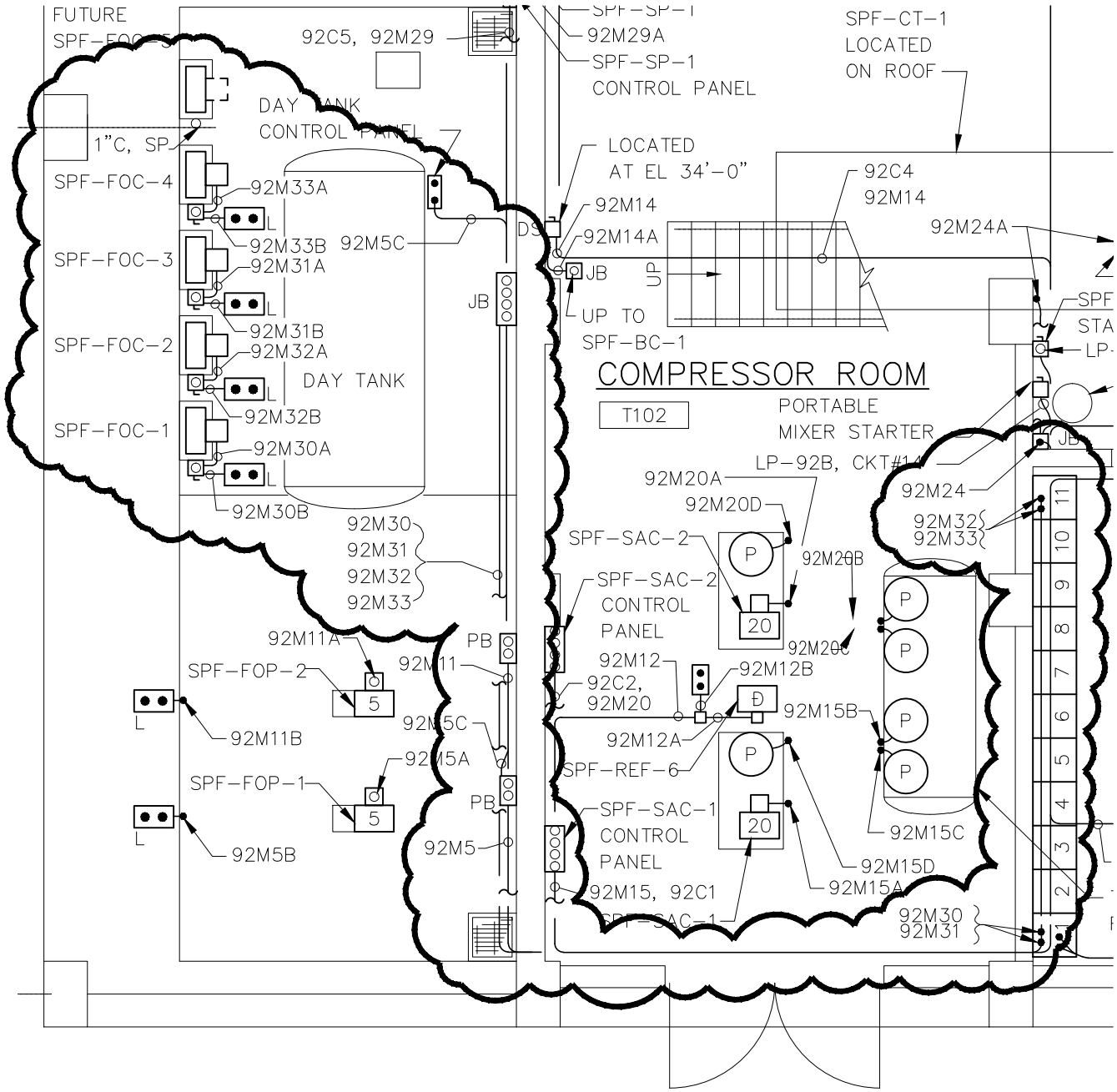

PARTIAL POWER PLAN

NOTE: DISCONNECT AND REMOVE
EXISTING MANUAL STARTERS
FOR SPF-FOC-1, SPF-FOC-2,
SPF-FOC-3 & SPF-FOC-4

REVISES DWG TE14

DES MMN	CKD BBK					H.P.W.W.T.P.
DR GR	APPD					DIVISION 5H3B
GREELEY AND HANSEN						SD-62
ENGINEERS						
TAMPA, FLORIDA 36607		NO.	DATE	APPD	REVISION	DATE JUN 1995 NO. 0

BASE: H:\AC\5H3B\SD\5H3BSD62 SCALE: 1:1i 06/15, 1995 at 09:29 *R11 c2*

5H3B_0TE-014A

NOTES:

1. FIXTURE SHALL BE APPROVED FOR THROUGH WIRING.
2. CONNECT EMERGENCY BATTERY PACK TO UNSWITCHED LEG OF THE CIRCUIT.
3. LIGHTING FIXTURES IN THIS AREA SHALL BE MOUNTED ON CONTINUOUS CHANNEL SUPPORTS 10'-0" A.F.F. UNLESS OTHERWISE NOTED.
4. REFER TO EXTERIOR LIGHTING CONTROL DIAGRAM MOUNT PHOTOCELL ON 4'-0" POLE FACING NORTH.
5. TO SWITCH SHOWN ON EL 12'-0" FLOOR PLAN.
6. MOUNT EMERGENCY FIXTURE 8'-0" A.F.F. UNLESS OTHERWISE NOTED.
7. PENDANT MOUNT EXIT LIGHT 1'-0" ABOVE TOP OF DOOR.
8. PENDANT MOUNT EXIT LIGHT 8'-0" A.F.F.
9. MOUNT FIXTURE 1'-0" ABOVE DOOR TO CENTER OF FIXTURE.
10. REMOTE BATTERY PACK TEST PUSH BUTTON AND INDICATING LIGHT IN WEATHERPROOF ENCLOSURE MTD. 5'-0" A.F.F. (TYPICAL).
11. CONDUIT SHOWN ON EXTERIOR OF BUILDING FOR CLARITY ONLY, CONDUIT SHALL BE INSTALLED ON INTERIOR OF BUILDING.
12. TO RECEPTACLE ON CIRCUIT TL1-1
13. PENDANT MOUNT THE LIGHTING FIXTURES IN THIS AREA SO THAT THE BOTTOM OF THE FIXTURE LENS IS EVEN WITH THE BOTTOM OF THE CEILING JOIST. PROVIDE NO. 10 AWG COPPER CONDUCTORS.
14. ALL WALL SWITCHES FOR LIGHTING CIRCUITS IN THIS BUILDING SHALL HAVE WEATHERPROOF COVERPLATES.
15. CONDUIT DOWN TO TYPE FH1 LIGHT FIXTURE AT ELEVATION 22'(NOT SHOWN).
16. CONTRACTOR SHALL PROVIDE AUX. RELAYS AS REQUIRED FOR PROPER FUNCTIONING OF MECHANICALLY HELD CONTACTORS.
17. EXHAUST FAN SPF-REF-6 SHALL CIRCUIT LP-92B THROUGH SPF-TCP-1.

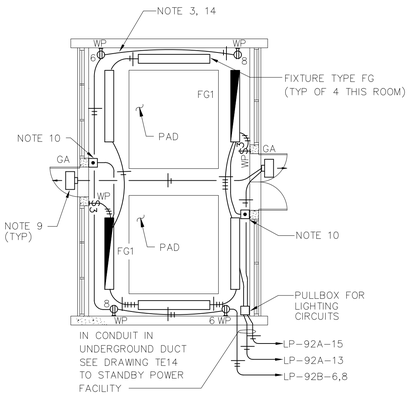

TRANSFORMER YARD PLAN AT GRADE

SCALE: 1"=1'-0"

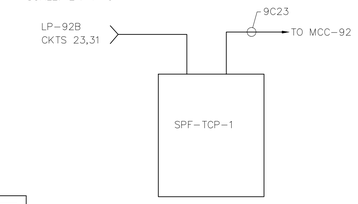

TEMPERATURE CONTROL PANEL SPF-TCP-1 BLOCK DIAGRAM

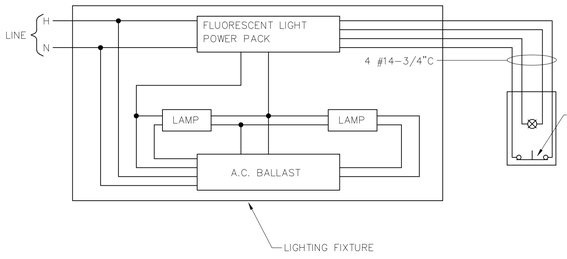

TYPICAL BATTERY POWERED FIXTURE

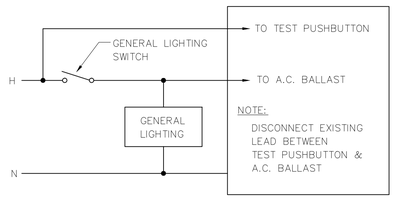

TYPICAL BATTERY POWERED FIXTURE

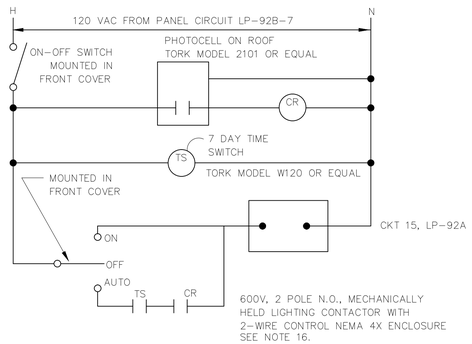

LIGHTING CONTACTOR PANEL DETAIL

SCALE: NONE

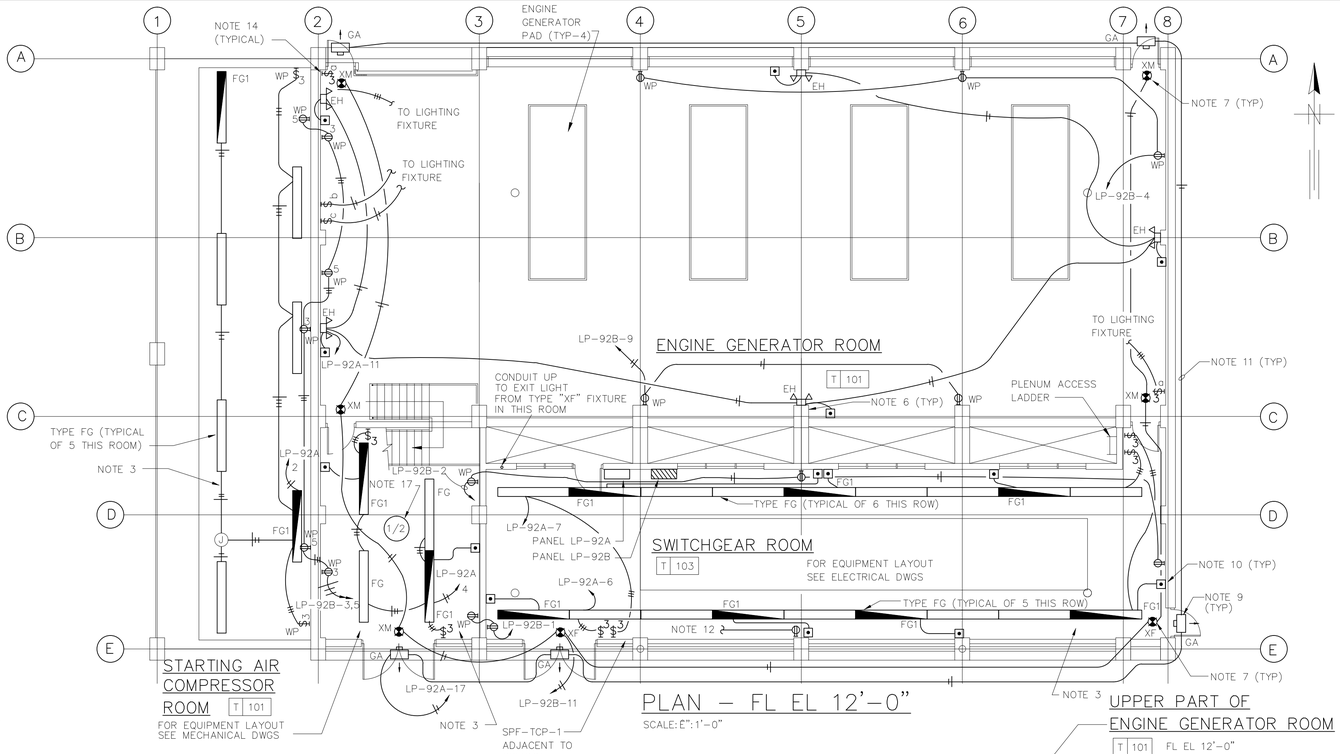

RECORD DRAWING

THIS RECORD DRAWING IS NOT WARRANTED BUT IS BELIEVED TO REPRESENT CONDITIONS UPON COMPLETION OF CONSTRUCTION WITHIN REASONABLE TOLERANCES, BASED UPON THE INFORMATION FURNISHED TO THE ENGINEER PERTAINING TO CHANGES MADE DURING CONSTRUCTION.

EMTEC Corporation
CONSULTING ENGINEERS
1723 W. KENNEDY BOULEVARD
SUITE 210
TAMPA, FLORIDA 33606

GREELEY AND HANSEN
ENGINEERS
1715 NORTH WESTSHORE BOULEVARD
TAMPA, FLORIDA 33607-4135

DESIGNED RG
DRAWN RG
CHECKED RJJ

APPROVED _____ DATE _____
_____ DATE _____
GREELEY AND HANSEN, ENGINEERS

NO.	DATE	APPD	REVISION
4	8/2/96		RECORD DWG REVISIONS

SCALE
8 0 8 16 FT
1/8"=1'-0"

CITY OF TAMPA, FLORIDA
HOOKERS POINT WASTEWATER TREATMENT PLANT
PLANT EXPANSION
PHASE I DIVISION 5H3B
STANDBY POWER AND SLUDGE STORAGE FACILITIES

STANDBY POWER FACILITY
ELECTRICAL
PLAN AT EL 12'-0"

PROJ NO. 202G
DWG TE15
SHEET
DATE DECEMBER 1991 REV 4

5H3B_0TE-015

FILE: H3B-TE15 SCALE: 196 09/11, 1996 at 09:49 - "13_c4h (Hardware Lock)"

NOTES:

1. PENDANT MOUNT FIXTURE SO THAT BOTTOM OF LENS IS EVEN WITH THE BOTTOM OF THE CEILING JOIST.
2. PROVIDE NO. 10 AWG COPPER CONDUCTORS.
3. SEE LIGHTING PLAN FOR FIXTURE MOUNTING HEIGHT.

CONDUIT SCHEDULE – LIGHTING PANEL LP92A (208/120V, 3PH, 4W, W/GRD BUS)

CKT NO.	LOCATION	FL EL	MTG HGT	FIXT TYPE	LIGHTS MOTORS	RCPT	TOTAL WATTS	REMARKS
1	GENERATOR ROOM	27'–3"	––'–0"	GM	6@500W	––	3000	NOTE 1
2	TANK ROOM	12'–0"	10'–6"	FG	7@150W	––	1050	––
3	GENERATOR ROOM	27'–3"	––'–0"	GM	4@500W	––	2000	NOTE 1
4	COMPRESSOR ROOM	12'–0"	10'–6"	FG	4@150W	––	600	––
5	GENERATOR ROOM	27'–3"	––'–0"	GM	5@500W	––	2500	NOTE 1
6	SWITCHGEAR ROOM	12'–0"	10'–0"	FG	9@150W	––	1350	––
7	SWITCHGEAR ROOM	12'–0"	10'–0"	FG	9@150W	––	1350	––
8	SPARE	––'–0"	––'–0"	––	––	––	––	––
9	STAIRWELL	22'–0"	8'–0"	FH1	1@80W	––	240	––
	STAIRWELL	27'–10"	8'–0"	FH1	1@80W	––		––
	STAIRWELL	33'–6"	8'–0"	FH1	1@80W	––		––
10	PLENUM PLATFORM	27'–3"	12'–0"	FB	5@150W	––	750	––
11	EMERGENCY LIGHTS	12'–0"	8'–0"	EH	5@70W	––	350	––
12	SPARE							
13	TRANSFORMER YARD	12'–0"	9'–6"	FG1	6@150W	––	900	NOTE 2
14	SPARE							
15	TRANSFORMER YARD	12'–0"	9'–6"	GA	2@70W	––	140	NOTE 2,3
16	SPARE							
17	EXTERIOR	12'–0"	––'–0"	GA	4@70W	––	350	NOTE 3
18	EWH–1	––	––	––	1@3000W	––	3000	––
19–42	SPARES							

TOTAL WATTS: 17,580

SURFACE MOUNTED 225A BUS, 150 AMP MAIN BREAKER

CONDUIT SCHEDULE – LIGHTING PANEL LP92B (208/120V, 3PH, 4W, W/GRD BUS)

CKT NO.	LOCATION	FL EL	MTG HGT	FIXT TYPE	LIGHTS MOTORS	RCPT	TOTAL WATTS	REMARKS
1	COMPRESSOR & SWITCHGEAR ROOM	12'–0"	2'–0"	––	––	3	600	––
2	COMPRESSOR & SWITCHGEAR ROOM	12'–0"	2'–0"	––	––	3	600	––
3	COMPRESSOR & TANK ROOM	12'–0"	2'–0"	––	––	3	600	GFI BREAKER
4	GENERATOR ROOM	12'–0"	2'–0"	––	––	3	600	––
5	TANK & GENERATOR ROOM	12'–0"	2'–0"	––	––	3	600	GFI BREAKER
6	TRANSFORMER YARD	12'–0"	2'–0"	––	––	2	400	NOTE 2, GFI BREAKER
7	CONTACTOR CONTROL CKT	––'–0"	––	––	––	––	––	––
8	TRANSFORMER YARD	12'–0"	2'–0"	––	––	2	400	NOTE 2, GFI BREAKER
9	GENERATOR ROOM	12'–0"	2'–0"	––	––	2	400	––
10	SPARE	–	––	––	––	––	–	–
11	EXIT LIGHTS	12'–0"	––	XM	7@50W	––	350	NOTE 3
12	PLENUM PLATFORM & ROOF	12'–0"	2'–0"	––	––	4	800	––
13	CHEMICAL PUMP (SPF–CFP–1)	––	––	––	––	––	1130	––
14	CHEMICAL TANK – MIXER	––	––	––	––	––	670	––
15	FUEL OIL COOLER SPF–FOC–1	––	––	––	2@390W	––	780	––
	FUEL OIL COOLER SPF–FOC–2	––	––	––	––	––	––	––
16	FUEL OIL COOLER SPF–FOC–3	––	––	––	3@390W	––	1170	––
	FUEL OIL COOLER SPF–FOC–4	––	––	––	––	––	––	––
	FUEL OIL COOLER SPF–FOC–5	(FUTURE)	––	––	––	––	––	––
17	GENERATOR G3, SPACE HEATER	––	––	––	––	––	1000	––
18	GENERATOR G4, SPACE HEATER	––	––	––	––	––	1000	––
19	GENERATOR G5, SPACE HEATER	––	––	––	––	––	1000	––
20	GENERATOR G6, SPACE HEATER	––	––	––	––	––	1000	––
21	GENERATOR G7, SPACE HEATER	(FUTURE)	––	––	––	––	1000	––
22	ANNUNCIATOR	––	––	––	––	––	500	––
23	SPF–TCP–1	––	––	––	––	––	500	TEMP CONTROL PANEL
24	RTU	––	––	––	––	––	1000	––
25	FUEL OIL TANK LEVEL MONITORS	––	––	––	––	––	100	––
26	MASTER GENERATOR CONTROLS	––	––	––	––	––	1500	––
27	125V DC BATTERY CONSOLE	––	––	––	––	––	2500	30 A 1P
28/30	MANHOLE MH1–E31	––	––	––	––	––	1000	20 A 2P, SUMP PUMP
29	24V DC BATTERY CONSOLE	––	––	––	––	––	2500	20 A 3P
31	SPF–REF–6	––	––	––	––	1@760W	760	––
32–42	SPARES	––	––	––	––	––	–	––

TOTAL WATTS: 24,450

SURFACE MOUNTED 225A BUS, 150 AMP MAIN BREAKER

RECORD DRAWING

THIS RECORD DRAWING IS NOT WARRANTED BUT IS BELIEVED TO REPRESENT CONDITIONS UPON COMPLETION OF CONSTRUCTION WITHIN REASONABLE TOLERANCES, BASED UPON THE INFORMATION FURNISHED TO THE ENGINEER PERTAINING TO CHANGES MADE DURING CONSTRUCTION.

EMTEC Corporation
CONSULTING ENGINEERS
1723 W. KENNEDY BOULEVARD
SUITE 210
TAMPA, FLORIDA 33606

GREELEY AND HANSEN
ENGINEERS
1715 NORTH WESTSHORE BOULEVARD
TAMPA, FLORIDA 33607–4135

DESIGNED RG
DRAWN RG
CHECKED RJJ

APPROVED _____ DATE _____
_____ DATE _____
GREELEY AND HANSEN, ENGINEERS

NO.	DATE	APPD	REVISION
4	8/2/96		RECORD DWG REVISIONS

SCALE
8 0 8 16 FT
1/8"=1'–0"

CITY OF TAMPA, FLORIDA
HOOKERS POINT WASTEWATER TREATMENT PLANT
PLANT EXPANSION
PHASE I DIVISION 5H3B
STANDBY POWER AND SLUDGE STORAGE FACILITIES

STANDBY POWER FACILITY
ELECTRICAL
LIGHTING PANELBOARD SCHEDULE

PROJ NO. 202G
DWG TE16
SHEET
DATE DECEMBER 1991 REV 4

5H3B_0TE-016

FILE: H3B-TE16 SCALE: 1:90 09/10, 1996 at 13:51 – *13_4th (Hardware Lock)*

CONDUIT NUMBER & SIZE		CONDUCTOR QUANTITY & SIZE	FROM	TO	REMARKS
			13.2 KV INDOOR SWITCHGEAR NO. 3		
3H1	4	3–500MCM, 15 KV & 1#1/0, 600V GND	13.2 KV SWGR NO. 3	EX. 13.2 KV SWGR NO. 2	GENERATOR G1
3H2	4	3–500MCM, 15 KV & 1#1/0, 600V GND	13.2 KV SWGR NO. 3	EX. 13.2 KV SWGR NO. 2	GENERATOR G2
3H3	4	3–500MCM, 15 KV & 1#1/0, 600V GND	13.2 KV SWGR NO. 3	GENERATOR G3	
3H3A	4	1–500MCM, 15 KV & 1#1/0, 600V GND	GENERATOR G3	NEUTRAL GRDG RESIST	
3C3A	2	30#14 & 1#14 GND	13.2 KV SWGR NO. 3	GENERATOR G3	10 SPARE
3C3B	2	20#12 & 1#12 GND	13.2 KV SWGR NO. 3	GENERATOR G3	6 SPARE
3C3C	2	4–2/C#16 SHLD 10–3/C#16 SHLD	13.2 KV SWGR NO. 3	GENERATOR G3	2 SPARE 2/C#16 2 SPARE 3/C#16
3H4	4	3–500MCM, 15 KV & 1#1/0, 600V GND	13.2 KV SWGR NO. 3	GENERATOR G4	
3H4A	4	1–500MCM, 15 KV & 1#1/0, 600V GND	GENERATOR G4	NEUTRAL GRDG RESIST	
3C4A	2	30#14 & 1#14 GND	13.2 KV SWGR NO. 3	GENERATOR G4	10 SPARE
3C4B	2	20#12 & 1#12 GND	13.2 KV SWGR NO. 3	GENERATOR G4	6 SPARE
3C4C	2	4–2/C#16 SHLD 10–3/C#16 SHLD	13.2 KV SWGR NO. 3	GENERATOR G4	2 SPARE 2/C#16 2 SPARE 3/C#16
3H5	4	3–500MCM, 15 KV & 1#1/0, 600V GND	13.2 KV SWGR NO. 3	GENERATOR G5	
3H5A	4	1–500MCM, 15 KV & 1#1/0, 600V GND	GENERATOR G5	NEUTRAL GRDG RESIST	
3C5A	2	30#14 & 1#14 GND	13.2 KV SWGR NO. 3	GENERATOR G5	10 SPARE
3C5B	2	20#12 & 1#12 GND	13.2 KV SWGR NO. 3	GENERATOR G5	6 SPARE
3C5C	2	4–2/C#16 SHLD 10–3/C#16 SHLD	13.2 KV SWGR NO. 3	GENERATOR G5	2 SPARE 2/C#16 2 SPARE 3/C#16
3H6	4	3–500MCM, 15 KV & 1#1/0, 600V GND	13.2 KV SWGR NO. 3	GENERATOR G6	
3H6A	4	1–500MCM, 15 KV & 1#1/0, 600V GND	GENERATOR G6	NEUTRAL GRDG RESIST	
3C6A	2	30#14 & 1#14 GND	13.2 KV SWGR NO. 3	GENERATOR G6	10 SPARE
3C6B	2	20#12 & 1#12 GND	13.2 KV SWGR NO. 3	GENERATOR G6	6 SPARE
3C6C	2	4–2/C#16 SHLD 10–3/C#16 SHLD	13.2 KV SWGR NO. 3	GENERATOR G6	2 SPARE 2/C#16 2 SPARE 3/C#16

CONDUIT NUMBER & SIZE		CONDUCTOR QUANTITY & SIZE	FROM	TO	REMARKS
			STANDBY POWER FACILITY – CONTROL CONDUITS		
92C1	3/4	4#14 & 1#14 GND	SPF–SAC–1 CONT PANEL	ANNUNICATOR	
92C2	3/4	2#14 & 1#14 GND	SPF–SAC–2 CONT PANEL	ANNUNICATOR	
92C3	2–1/2	5–12/C#14 & 1#14 GND	MCC–92	SPF–TCP–1	9 SPARE
92C4	1	6#14 & 1#12 GND	MCC–92	CONT STA AT COLUMN 2B	
92C5	3/4	4#14 & 1#12 GND	SPF–SP–1 CONT PANEL	ANNUNCIATOR	
92C6	1	6#14 & 1#12 GND	JB NEAR SPF–CT–1	ANNUNCIATOR	
92C6A	3/4	2#14 & 1#12 GND	SPF–CT–1 CONT PANEL	JB NEAR SPF–CT–1	
92C6B	3/4	2#14 & 1#12 GND	SPF–CT–2 CONT PANEL	JB NEAR SPF–CT–1	
92C6C	3/4	2#14 & 1#12 GND	SPF–CT–3 CONT PANEL	JB NEAR SPF–CT–1	
92C7	2	3–12/C#14 & 1#14 GND	MCC–92	ANNUNCIATOR	10 SPARE
92C8	2	3–12/C#14 & 1#14 GND	MCC–92	RTU	10 SPARE
92C9	2	2–12/C#14 & 1#14 GND	MCC–92	GEN. MASTER CONT CUB.	14 SPARE
92C10	3/4	2#14 & 1#14 GND	SPF–G3 CONTROL PANEL	SPF–MV–1	
92C11	3/4	2#14 & 1#14 GND	SPF–G4 CONTROL PANEL	SPF–MV–2	
92C12	3/4	2#14 & 1#14 GND	SPF–G5 CONTROL PANEL	SPF–MV–3	
92C13	3/4	2#14 & 1#14 GND	SPF–G6 CONTROL PANEL	SPF–MV–4	
92C14	3	7–12/C#14 & 1#14 GND	ANNUNCIATOR	RTU	20 SPARE
92C20	1	4#14 & 1#14 GND	MCC–92	JB NEAR COL 4A	
92C20A	1	4#14 & 1#14 GND	JB NEAR COL 4A	GENERATOR INST. PANEL	SPF–G3
92C20B	1	4#14 & 1#14 GND	JB NEAR COL 4A	JB NEAR COL 5A	
92C20C	1	4#14 & 1#14 GND	JB NEAR COL 5A	GENERATOR INST. PANEL	SPF–G4
92C20D	1	4#14 & 1#14 GND	JB NEAR COL 5A	JB NEAR COL 6A	
92C20E	1	4#14 & 1#14 GND	JB NEAR COL 6A	GENERATOR INST. PANEL	SPF–G5
92C20F	1	4#14 & 1#14 GND	JB NEAR COL 6A	JB NEAR COL 7A	
92C20G	1	4#14 & 1#14 GND	JB NEAR COL 7A	GENERATOR INST. PANEL	SPF–G6
92C30	1	8#14 & 1#14 GND	FAULT MON ALARM PANEL	JB NR TK#1 RESVR SEN	
92C30A	3/4	2#14 & 1#14 GND	JB NR TK#1 RESVR SEN	TANK NO. 1 RESERVIOR SEN	
92C30B	3/4	2#14 & 1#14 GND	JB NR TK#1 RESVR SEN	TANK NO. 1 CARR PIPE SEN	
92C30C	1	4#14 & 1#14 GND	JB NR TK#1 RESVR SEN	JB NEAR TANK NO. 2 RESVR SEN	
92C30D	3/4	2#14 & 1#14 GND	JB NR TK#2 RESVR SEN	TANK NO. 2 RESVR SEN	
92C30E	3/4	2#14 & 1#14 GND	JB NR TK#2 RESVR SEN	TANK NO. 2 CARR PIPE SEN	
92C31	1	8#14 & 1#14 GND	FAULT MONITORING ALARM PANEL ANNUNCIATOR		
92C52	1–1/4	2#2 & 1#8 GND	125 VDC BATTERY CONSOLE	13.2 KV SWGR NO. 3	
92C53	3/4	4#14 & 1#14 GND	125 VDC BATTERY CONSOLE	ANNUNCIATOR	
92C54	1–1/4	2#2 & 1#8 GND	24 VDC BATTERY CONSOLE	13.2 KV SWGR NO.3	
92C55	3/4	4#14 & 1#14 GND	24 VDC BATTERY CONSOLE	ANNUNCIATOR	
92C56	1–1/2	1–12/C#14 & 1#14 GND	13.2 KV SWGR NO. 3	SPF–TCP–1	2 SPARE
92C57	4	15–12/C#14 & 1#14 GND	13.2 KV SWGR NO. 3	RTU	36 SPARE
92C99	4	14–12/C#14 & 1#14 GND	TB–SPF–1	13.2 KV SWGR. NO. 3	52 SPARE
92C100	3	6–12/C#12 & 1#14 GND	TB–SPF–1	MANHOLE MH–E6	18 SPARE
92C100A	2	1–12/C#12 & 1#14 GND	MANHOLE MH–E6	13.2 KV SWGR NO. 1 CUB. 2	SEE NOTE 1
92C100B	2	2–12/C#12 & 1#14 GND	MANHOLE MH–E6	13.2 KV SWGR NO. 1 CUB. 11	4 SPARE,SEE NOTE 1
92C100C	2	2–12/C#12 & 1#14 GND	MANHOLE MH–E6	13.2 KV SWGR NO. 1 CUB. 12	10 SPARE,SEE NOTE 1
92C100D	2	1–12/C#12 & 1#14 GND	MANHOLE EH–E6	13.2 KV SWGR NO. 1 CUB. 21	4 SPARE,SEE NOTE 1
92C101	3	8–12/C#12 & 1#14 GND	TB–SPF–1	PULL BOX IN MAIN P.S.	34 SPARE
92C101A	2	2–12/C#12 & 1#14 GND	PULL BOX IN MAIN P.S.	13.2 KV SWGR NO. 2 SECT. A	4 SPARE
92C101B	2	2–12/C#12 & 1#14 GND	PULL BOX IN MAIN P.S.	13.2 KV SWGR NO. 2 SECT. B	4 SPARE
92C101C	2	2–12/C#12 & 1#14 GND	PULL BOX IN MAIN P.S.	GEN NO. 1 CONTROL CONSOLE	11 SPARE
92C101D	2	2–12/C#12 & 1#14 GND	PULL BOX IN MAIN P.S.	GEN NO. 2 CONTROL CONSOLE	11 SPARE

CONDUIT NUMBER & SIZE		CONDUCTOR QUANTITY & SIZE	FROM	TO	REMARKS
			STANDBY POWER FACILITY – INSTRUMENTATION CONDUITS		
92N1	3/4	1–2/C#16 SHLD	THERMOSTAT	SPF–MV–1	
92N2	3/4	1–2/C#16 SHLD	THERMOSTAT	SPF–MV–2	
92N3	3/4	1–2/C#16 SHLD	THERMOSTAT	SPF–MV–3	
92N4	3/4	1–2/C#16 SHLD	THERMOSTAT	SPF–MV–4	
92N10	1	SEE NOTE 2	INVENTORY MONITOR	INVENTORY MONITOR PROBE	STORAGE TANK NO. 1
92N11	1	SEE NOTE 2	INVENTORY MONITOR	INVENTORY MONITOR PROBE	STORAGE TANK NO. 2
92N12	1–1/4	1–4 PR#16 SHLD	FUEL TKS 1 & 2 INVEN. MON.	RTU	1 SPARE
92N99	2	4–4 PR#16 SHLD	TB–SPF–1	13.2 KV SWGR NO. 3	2 PR#16 SPARE
92N100	3	4–4 PR#16 SHLD	TB–SPF–1	MANHOLE MH–E6	2 PAIR SPARE
92N100A	2	1–4 PR#16 SHLD	MANHOLE MH–E6	13.2 KV SWGR NO.1 CUB 11	1 PR SPARE,SEE NOTE 1
92N100B	2	1–4 PR#16 SHLD	MANHOLE MH–E6	13.2 KV SWGR NO.1 CUB 12	1 PR SPARE,SEE NOTE 1
92N100C	3	2–4 PR#16 SHLD	MANHOLE MH–E6	PULL BOX IN MAIN P.S.	
92N100D	1–1/4	1–4 PR#16 SHLD	PULL BOX IN MAIN P.S.	GEN NO. 1 CONTROL CONSOLE	
92N100E	1–1/4	1–4 PR#16 SHLD	PULL BOX IN MAIN P.S.	GEN NO. 2 CONTROL CONSOLE	

NOTES:

1. INSTALL CABLES IN EXISTING CONDUITS.
2. INSTALL CABLES FURNISHED BY EQUIPMENT MANUFACTURER.

RECORD DRAWING

THIS RECORD DRAWING IS NOT WARRANTED BUT IS BELIEVED TO REPRESENT CONDITIONS UPON COMPLETION OF CONSTRUCTION WITHIN REASONABLE TOLERANCES, BASED UPON THE INFORMATION FURNISHED TO THE ENGINEER PERTAINING TO CHANGES MADE DURING CONSTRUCTION.

H:\5B-TE17.DWG 03-20-98 11:35

GREELEY AND HANSEN
ENGINEERS
1715 NORTH WESTSHORE BOULEVARD
TAMPA, FLORIDA 33607–4135

DESIGNED CSC
DRAWN BBK
CHECKED BBK

APPROVED _____ DATE _____
_____ DATE _____
GREELEY AND HANSEN, ENGINEERS

NO.	DATE	APPD	REVISION
4	8/2/96		RECORD DWG REVISIONS

SCALE
NOT TO SCALE

CITY OF TAMPA, FLORIDA
HOOKERS POINT WASTEWATER TREATMENT PLANT
PLANT EXPANSION
PHASE I DIVISION 5H3B
STANDBY POWER AND SLUDGE STORAGE FACILITIES

STANDBY POWER FACILITY
ELECTRICAL
CONDUIT AND CABLE SCHEDULE

PROJ NO. 202G
DWG TE17
SHEET
DATE DECEMBER 1991 REV 4

5H3B_0TE-017

CONDUIT NUMBER & SIZE	CONDUCTOR QUANTITY & SIZE	FROM	TO	REMARKS
		MOTOR CONTROL CENTER MCC-92		
92M1A	4	3-500MCM,1#1/0 GND	TRANSFORMER T-9A-2	MCC-92	BUS NO. 1
92M1B	4	3-500MCM,1#1/0 GND	TRANSFORMER T-9A-2	MCC-92	BUS NO. 1
92M2A	4	3-500MCM,1#1/0 GND	TRANSFORMER T-9B-2	MCC-92	BUS NO. 2
92M2B	4	3-500MCM,1#1/0 GND	TRANSFORMER T-9B-2	MCC-92	BUS NO. 2
92M3	1-1/2	6#8,6#14&1#10 GND	MCC-92	JB NEAR SPF-REF-1	
92M3A	1-1/4	6#8&1#10 GND	JB NEAR SPF-REF-1	SPF-REF-1	
92M3B	1	6#14&1#10 GND	JB NEAR SPF-REF-1	PUSHBUTTON STATION	
92M4	1-1/2	6#8,6#14&1#10 GND	MCC-92	JB NEAR SPF-REF-3	
92M4A	1-1/4	6#8&1#10 GND	JB NEAR SPF-REF-3	SPF-REF-3	
92M4B	1	6#14&1#10 GND	JB NEAR SPF-REF-3	PUSHBUTTON STATION	
92M5	1-1/2	3#12,17#14&1#12 GND	MCC-92	JB NEAR SPF-FOP-1	
92M5A	1	3#12 & 1#12 GND	JB NEAR SPF-FOP-1	SPF-FOP-1	
92M5B	1	4#14 & 1#12 GND	JB NEAR SPF-FOP-1	PUSHBUTTON STATION	
92M5C	1-1/4	17#14 & 1#12 GND	JB NEAR SPF-FOP-1	DAY TANK CONTROL PANEL	
92M6	1-1/2	3#10,6#14&1#10 GND	MCC-92	JB NEAR SPF-JWP-3	
92M6A	3/4	3#10 & 1#10 GND	JB NEAR SPF-JWP-3	SPF-JWP-3	
92M6B	3/4	4#14 & 1#10 GND	JB NEAR SPF-JWP-3	PUSHBUTTON STATION	
92M6C	3/4	2#14 & 1#10 GND	JB NEAR SPF-JWP-3	LIMIT SWITCH	
92M7	1	3#8 & 1#10 GND	MCC-92	SPF-CT-1 CONTROL PANEL	
92M8	1	3#8 & 1#10 GND	MCC-92	SPF-CT-2 CONTROL PANEL	
92M9	1-1/2	3#10,6#14&1#10 GND	MCC-92	JB NEAR SPF-JWP-1	
92M9A	3/4	3#10 & 1#10 GND	JB NEAR SPF-JWP-1	SPF-JWP-1	
92M9B	3/4	4#14 & 1#12 GND	JB NEAR SPF-JWP-1	PUSHBUTTON STATION	
92M9C	3/4	2#14 & 1#12 GND	JB NEAR SPF-JWP-1	LIMIT SWITCH	
92M10	1-1/2	3#10,6#14&1#10 GND	MCC-92	JB NEAR SPF-JWP-2	
92M10A	3/4	3#10 & 1#10 GND	JB NEAR SPF-JWP-2	SPF-JWP-2	
92M10B	3/4	4#14 & 1#12 GND	JB NEAR SPF-JWP-2	PUSHBUTTON STATION	
92M10C	3/4	2#14 & 1#12 GND	JB NEAR SPF-JWP-2	LIMIT SWITCH	
92M11	1	3#12,4#14&1#12 GND	MCC-92	JB NEAR SPF-FOP-2	
92M11A	1	3#12 & 1#12 GND	JB NEAR SPF-FOP-2	SPF-FOP-2	
92M11B	1	4#14, & 1#12 GND	JB NEAR SPF-FOP-2	PUSHBUTTON STATION	
92M12	1	3#12,4#14&1#12 GND	MCC-92	PB NEAR SPF-REF-6	
92M12A	3/4	3#12 & 1#12 GND	PB NEAR SPF-REF-6	SPF-REF-6	
92M12B	3/4	4#14 & 1#12 GND	PB NEAR SPF-REF-6	PUSHBUTTON STATION	
92M13	1-1/2	3#4 & 1#8 GND	MCC-92	LT-92A	
92M13A	1-1/2	4#4 & 1#8 GND	LT-92A	LP-92A	
92M14	1	3#8 & 1#10 GND	MCC-92	CB FOR SPF-BC-1	
92M14A	1	3#8 & 1#10 GND	CB FOR SPF-BC-1	JB NEAR SPF-BC-1	
92M15	1-1/4	3#8 & 1#10 GND	MCC-92	SPF-SAC-1 CONTROL PANEL	
92M15A	1-1/4	3#8 & 1#10 GND	SPF-SAC-1 CONT PANEL	SPF-SAC-1	
92M15B	1	2#14 & 1#12 GND	SPF-SAC-1 CONT PANEL	PRESSURE SWITCH	
92M15C	1	2#14 & 1#12 GND	SPF-SAC-1 CONT PANEL	PRESSURE SWITCH	
92M15D	1	2#14 & 1#12 GND	SPF-SAC-1 CONT PANEL	PRESSURE SWITCH	
92M16	1-1/4	3#12, 5#14, 1#12 GND	MCC-92	JB NEAR SPF-LOP-1	
92M16A	1	3#12 & 1#12 GND	JB NEAR SPF-LOP-1	SPF-LOP-1	
92M16B	1	4#14 & 1#12 GND	JB NEAR SPF-LOP-1	PUSHBUTTON STATION	
92M16C	1	2#14 & 1#12 GND	JB NEAR SPF-LOP-1	PRESSURE SWITCH	
92M16D	1	2#14 & 1#12 GND	JB NEAR SPF-LOP-1	FLOAT SWITCH	
92M17	1	3#8 & 1#10 GND	MCC-92	GENERATOR CONTROL PANEL	
92M17A	1-1/4	3#8, 2#14 & 1#10 GND	GENERATOR CONT PANEL	JB ON GEN G3	JACKET WATER HEATER
92M17B	1-1/4	3#8, 2#14 & 1#10 GND	GENERATOR CONT PANEL	JB ON GEN G4	JACKET WATER HEATER
92M18	1-1/2	3#4 & 1#8 GND	MCC-92	LT-92B	
92M18A	2-1/2	4#1/0 & 1#6 GND	LT-92B	LC-92B	
92M19	1-1/4	3#6 & 1#10 GND	MCC-92	SPF-AC-1 CONTROL PANEL	
92M20	1-1/4	3#8 & 1#10 GND	MCC-92	SPF-SAC-2 CONTROL PANEL	
92M20A	1-1/4	3#8 & 1#10 GND	SPF-AC-2 CONT PANEL	SPF-SAC-2	
92M20B	1	2#14 & 1#12 GND	SPF-AC-2 CONT PANEL	PRESSURE SWITCH	
92M20C	1	2#14 & 1#12 GND	SPF-AC-2 CONT PANEL	PRESSURE SWITCH	
92M20D	1	2#14 & 1#12 GND	SPF-AC-2 CONT PANEL	PRESSURE SWITCH	
92M21	1-1/4	3#12,8#14&1#12 GND	MCC-92	JB NEAR SPF-WOP-1	
92M21A	1	3#12 & 1#12 GND	JB NEAR SPF-WOP-1	SPF-WOP-1	
92M21B	1	4#14 & 1#12 GND	JB NEAR SPF-WOP-1	PUSHBUTTON STATION	
92M21C	1	2#14 & 1#12 GND	JB NEAR SPF-WOP-1	PRESSURE SWITCH	
92M21D	1	2#14 & 1#12 GND	JB NEAR SPF-WOP-1	FLOAT SWITCH	

CONDUIT NUMBER & SIZE	CONDUCTOR QUANTITY & SIZE	FROM	TO	REMARKS
		MOTOR CONTROL CENTER MCC-92 (CONTINUED)		
92M22	1	3#8 & 1#10 GND	MCC-92	SPF-CT-3 CONTROL PANEL
92M23	1	3#8 & 1#10 GND	MCC-92	GENERATOR CONTROL PANEL
92M23A	1-1/4	3#8, 2#14 & 1#10 GND	GENERATOR CONT PANEL	JB ON GEN G5	JACKET WATER HEATER
92M23B	1-1/4	3#8, 2#14 & 1#10 GND	GENERATOR CONT PANEL	JB ON GEN G6	JACKET WATER HEATER
92M24	3/4	3#12 & 1#12 GND	MCC-92	JB NEAR COLUMN 3C	
92M24A	1	3#12 & 1#12 GND	JB NEAR COLUMN 3C	SPF-MV-1	
92M24B	1	3#12 & 1#12 GND	JB NEAR COLUMN 3C	SPF-MV-2	
92M25	3/4	3#12 & 1#12 GND	MCC-92	JB NEAR COLUMN 5C	
92M25A	1	3#12 & 1#12 GND	JB NEAR COLUMN 5C	SPF-MV-3	
92M25B	1	3#12 & 1#12 GND	JB NEAR COLUMN 5C	SPF-MV-4	
92M26	1-1/2	6#8,6#14&1#10 GND	MCC-92	JB NEAR SPF-REF-2	
92M26A	1-1/4	6#8 & 1#10 GND	JB NEAR SPF-REF-2	SPF-REF-2	
92M26B	1	6#14 & 1#10 GND	JB NEAR SPF-REF-2	PUSHBUTTON STATION	
92M27	1-1/2	6#8,6#14&1#10 GND	MCC-92	JB NEAR SPF-REF-4	
92M27A	1-1/4	6#8 & 1#10 GND	JB NEAR SPF-REF-4	SPF-REF-4	
92M27B	1	6#14 & 1#10 GND	JB NEAR SPF-REF-4	PUSHBUTTON STATION	
92M28	1-1/2	6#8,6#14&1#10 GND	MCC-92	JB NEAR SPF-REF-5	
92M28A	1-1/4	6#8 & 1#10 GND	JB NEAR SPF-REF-5	SPF-REF-5	
92M28B	1	6#14 & 1#10 GND	JB NEAR SPF-REF-5	PUSHBUTTON STATION	
92M29	3/4	3#12 & 1#12 GND	MCC-92	SPF-SP-1	
92M29A		SEE NOTE 1			
92M29B		SEE NOTE 1			
92M29C		SEE NOTE 1			
92M29D		SEE NOTE 1			

NOTE:
1. INSTALL CABLES FURNISHED BY SUMP PUMP SUPPLIER.

RECORD DRAWING

THIS RECORD DRAWING IS NOT WARRANTED BUT IS BELIEVED TO REPRESENT CONDITIONS UPON COMPLETION OF CONSTRUCTION WITHIN REASONABLE TOLERANCES, BASED UPON THE INFORMATION FURNISHED TO THE ENGINEER PERTAINING TO CHANGES MADE DURING CONSTRUCTION.

FILE: H3B-TE18 SCALE: 1:1 09/10, 1996 at 14:29 - *13_c4h (Hardware Lock)*

GREELEY AND HANSEN
ENGINEERS
1715 NORTH WESTSHORE BOULEVARD
TAMPA, FLORIDA 33607-4135

DESIGNED CSC
DRAWN BBK
CHECKED BBK

APPROVED
_____ DATE _____
_____ DATE _____
GREELEY AND HANSEN, ENGINEERS

NO.	DATE	APPD	REVISION
4	8/2/96		RECORD DWG REVISIONS

SCALE
NOT TO SCALE

CITY OF TAMPA, FLORIDA
HOOKERS POINT WASTEWATER TREATMENT PLANT
PLANT EXPANSION
PHASE I DIVISION 5H3B
STANDBY POWER AND SLUDGE STORAGE FACILITIES

STANDBY POWER FACILITY
ELECTRICAL
CONDUIT AND CABLE SCHEDULE

PROJ NO. 202G
DWG TE18
SHEET
DATE DECEMBER 1991 REV 4

5H3B_0TE-018

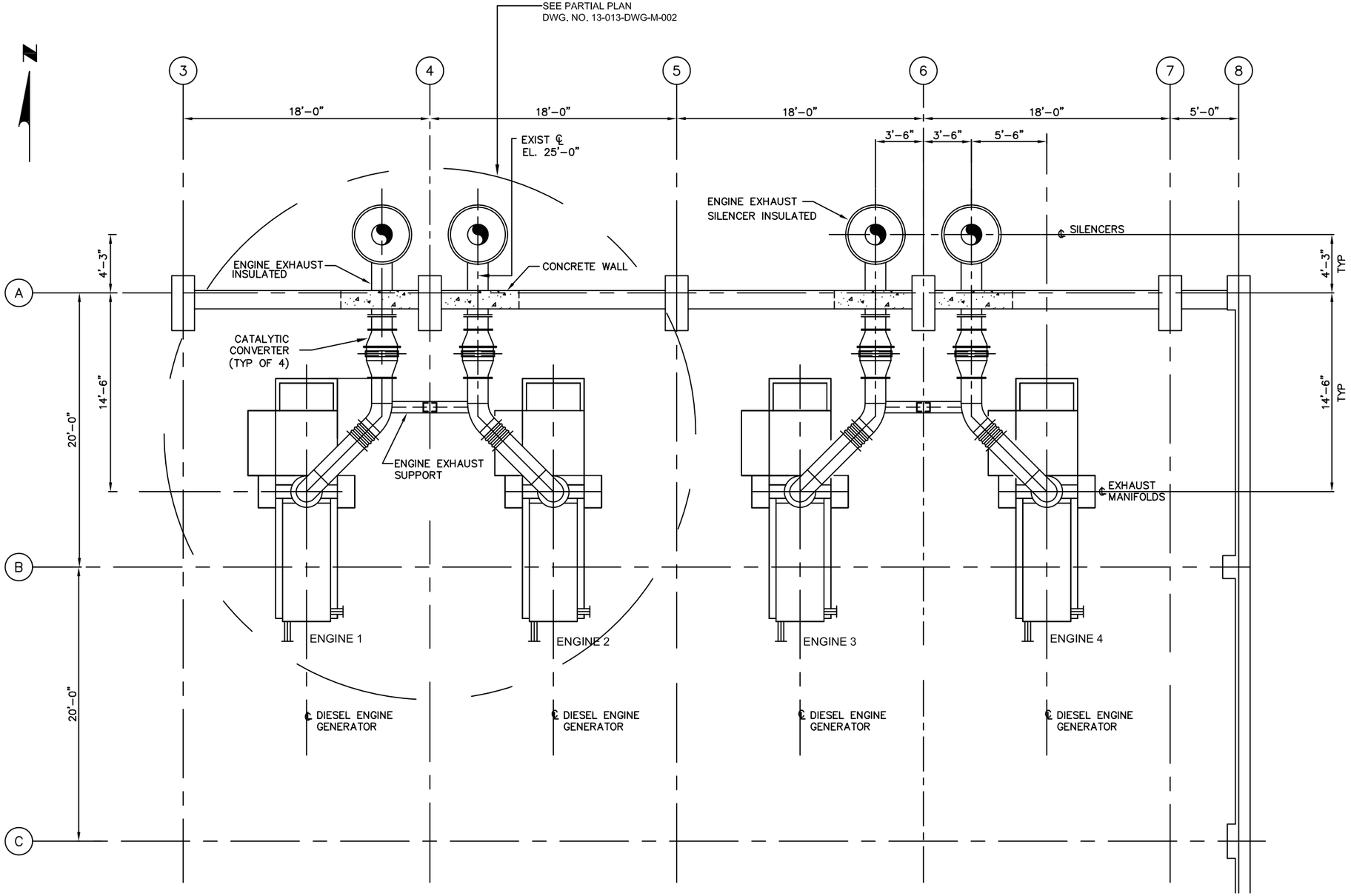

PLAN
(GENERAL ARRANGEMENT)

REFERENCES

DWG. 13-013-DWG-M-002 FOR PARTIAL PLAN
DWG. 13-013-DWG-M-003 FOR DETAILS

Name:
Professional Engineer's Registration Number:

REV	DATE	BY	APPR	CHK	ENGR	APPR
0	7/30/14	RHG	"AS-BUILT"	TJ	TJ	SD
B	11/1/13	RHG	90% SUBMITTAL REVIEW	TJ	TJ	SD
A	9/25/13	RHG	60% SUBMITTAL REVIEW	TJ	TJ	SD

THOMPSON GLOBAL PARTNERS LLC
405 N. REO STREET SUITE 300
TAMPA FL 33609
FL COA No. 28648

PROJECT NO: 13-013

DESIGNED BY:	D. THORTON	9/18/13
DRAWN BY:	J.HEWITT/R. GRAY	9/18/13
CHECKED BY:	T. JOHN	
APPROVED BY:	S. DEWITT	
SCALE:		DATE

CITY OF TAMPA, FLORIDA
HOOKERS POINT WASTEWATER TREATMENT PLANT
PHASE 1 DIVISION SH3B
STANDBY POWER AND SLUDGE STORAGE FACILITY

GENERAL ARRANGEMENT

DRAWING NO: 13-013-DWG-M-001 REV: 0

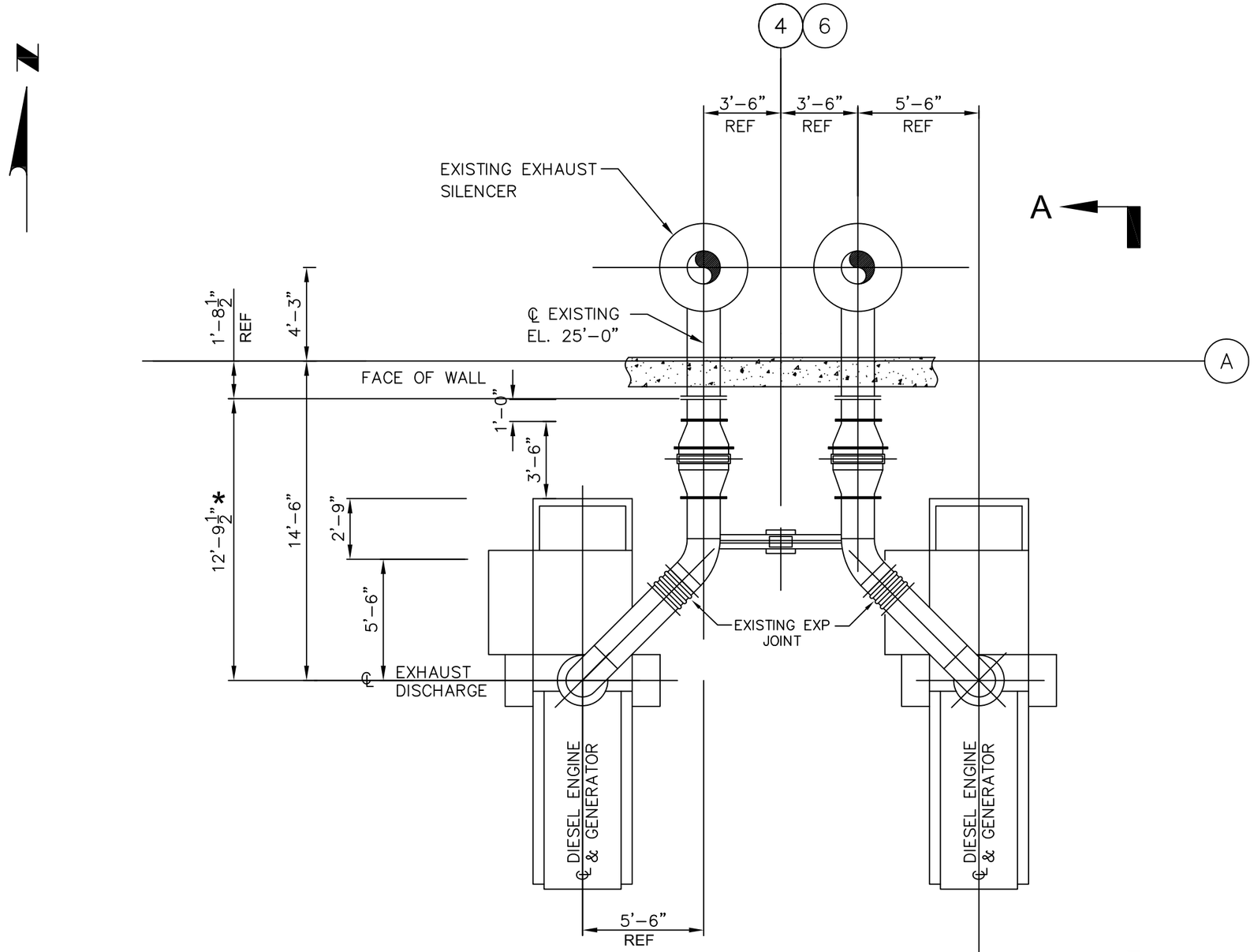

PARTIAL PLAN VIEW

A 13-013-DWG-M-003

NOTES:
1. FOR EXISTING SUPPORT STEEL SEE PROJECT NO. 2026, DWG. NO. TM7
2. FOR CATALYTIC CONVERTER SPECIFICATIONS, SEE VENDOR DRAWING 503711

REFERENCES

DWG. 13-013-DWG-M-003 PARTIAL PLAN DETAILS

Name:
Professional Engineer's Registration Number:

REV	DATE	BY	APPR	CHK	ENGR	APPR
0	7/30/14	RHG	"AS-BUILT"	TJ	TJ	SD
B	11/1/13	RHG	90% SUBMITTAL REVIEW	TJ	TJ	SD
A	9/25/13	RHG	60% SUBMITTAL REVIEW	TJ	TJ	SD

THOMPSON GLOBAL PARTNERS LLC
405 N. REO STREET SUITE 300
TAMPA FL 33609
FL COA No. 28648

PROJECT NO: 13-013

DESIGNED BY:	D. THORTON	9/13/13
DRAWN BY:	J.HEWITT/R. GRAY	9/16/13
CHECKED BY:	T. JOHN	
APPROVED BY:	S. DEWITT	
SCALE:		DATE

CITY OF TAMPA, FLORIDA
HOOKERS POINT WASTEWATER TREATMENT PLANT
PHASE 1 DIVISION SH3B
STANDBY POWER AND SLUDGE STORAGE FACILITY

PARTIAL PLAN VIEW

DRAWING NO: 13-013-DWG-M-002 REV: 0

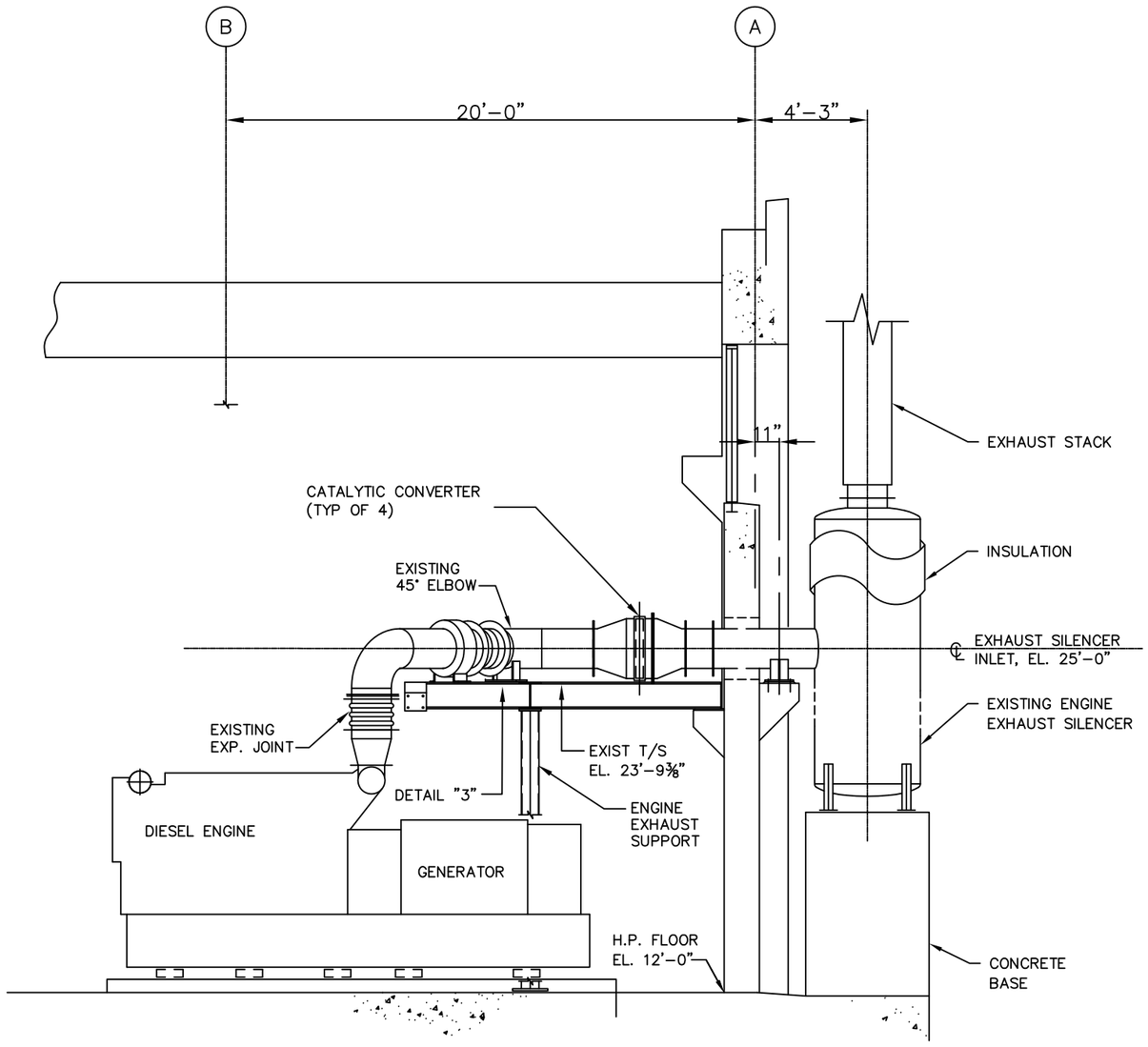

SECTION A–A
(LOOKING WEST)

REFERENCES

Name:
Professional Engineer's Registration Number:

REV	DATE	BY	APPR	CHK	ENGR	APPR
0	7/30/14	RHG	"AS-BUILT"	TJ	TJ	SD
B	11/1/13	RHG	90% SUBMITTAL REVIEW	TJ	TJ	SD
A	9/25/13	RHG	60% SUBMITTAL REVIEW	TJ	TJ	SD

THOMPSON GLOBAL PARTNERS LLC
405 N. REO STREET SUITE 300
TAMPA FL 33609
FL COA No. 28648

PROJECT NO: 13-013

DESIGNED BY:	D. THORTON	9/13/13
DRAWN BY:	J.HEWITT	9/16/13
CHECKED BY:		
APPROVED BY:		
SCALE:		DATE

CITY OF TAMPA, FLORIDA
HOOKERS POINT WASTEWATER TREATMENT PLANT
PHASE 1 DIVISION SH3B
STANDBY POWER AND SLUDGE STORAGE FACILITY

DETAILS

DRAWING NO: 13-013-DWG-M-003 REV: 0