CITY OF TAMPA

STORMWATER

TECHNICAL STANDARDS MANUAL

FOR

PRIVATE DEVELOPMENT

Adopted December 5, 1996

TABLE OF CONTENTS

SECTION I - INTRODUCTION 1

I.A. Stormwater Management in Tampa 1
I.B. Organization 1
I.C. Glossary: 2
I.D. Outside Agency Review 7
I.E. Review and Update 7
I.F. Warning and Disclaimer of Liability 7
I.G. Repeal of Conflicting Policy, Procedures, and Criteria 8
I.H Violation and Enforcement 8
I.I Effective Date 8
I.J. Deviations from Standards 8
I.K. Abandonment of Existing Stormwater Management Systems 8

SECTION II - BASIS OF REVIEW 9

II.A Residential 9
II.B. Commercial Redevelopment Projects 9
II.C. New Commercial Development Projects 9
II.D. Exceptions/Exemptions 9

SECTION III - GENERAL DEVELOPMENT REQUIREMENTS 10

III.A. Documentation Requirements 10
III.B. Finished Floor Elevation Requirements 10
III.C Grading and Excavation Requirements 10
III.C.1. Grading 10
III.C.2. Excavation Requirements 11
III.D. Development Within Flood Prone and Restricted Areas 12
III.D.1. Development On Red Lined Properties 12
III.D.2. Special Requirements for Designated Drainage Basins 12
III.D.3. Development in Existing Low Lots 12
III.D.4. Equivalent Storage Within Flood Prone Areas 13
III.E. Drainage Patterns not to be Changed to the Detriment of Neighboring Properties 13
III.F. Erosion and Sedimentation Control 13
III.G. Functional Stormwater System During Construction 14
III.H. Certificate of Occupancy 14
III.I. Permits for Work in Public Right-of-way 14
III.J. Review of Off-site Improvements Associated with Commercial Development 15
III.K. Protection of City Stormwater Management Systems 15
III.K.1. Structures in Drainage Easements 16

III.K.2. Ditch Relocation 16
III.K.3. Retaining/Decorative Walls and Structures on Ditch Banks 16
III.L. Discharge to Sinkholes 16
III.M. Maintenance of Private Drainage Facilities 16
III.N. Easement Requirements 16
III.O. Retaining Wall Construction 17

SECTION IV - DESIGN STANDARDS 19

IV.A. Exemptions / Exceptions 19
IV.A.1. Single Family Residential and Single Duplex Exemption 19
IV.A.2. Waiver of On-Site Drainage Requirements for Ybor City and Central Business District Community Redevelopment Areas 19
IV.A.3. Discharges to Basins with Adequate Stormwater Management Facilities 19
IV.A.4. Minimum Retention/Detention Requirement Projects 19
a. Small Commercial Projects 19
b. Drainage Systems Discharging Directly to Receiving Waters 20
IV.A.5. Capacity Adjustment 20

IV.B. Residential Standards 20
IV.B.1. Single Family Residential and Single Duplex Exemption 20
IV.B.2. Residential Projects Exceeding 50% Impervious 20
IV.B.3. Small Subdivision Standards 20

IV.C. Commercial Standards 21
IV.C.1. Drainage Review for Redevelopment 21
IV.C.2. Discharge / Detention/Retention / Water Quality Requirements 22
a) Discharge Requirements - Allowable Discharge 22
b) On-Site Detention/Retention Requirements 22
i) Drainage Systems Designed With a Positive Outfall 22
ii) Drainage Systems Designed Without a Positive Outfall 23
iii) Drainage Systems Designed in Volume Sensitive Basins 23
a) Drainage System Designed With a Positive Outfall in a Volume Sensitive Area 23
b) Drainage Systems Designed Without a Positive Outfall in a Volume Sensitive Area 24
c) Water Quality Requirements 24
IV.C.3. Culverts 25
a) Minimum Pipe Size 25
b) Lengths of Structures 25
c) Design Tailwater 25
d) End Treatment 25
e) Acceptable Materials 26

IV.C.4. Stormwater System Criteria and Design 26
a) Flow Generation.....26
b) Rainfall Curves 26
c) Runoff Coefficients.....26
IV.C.5. Outfall Pipes.....27
IV.C.6. Discharge to Public Streets 27
IV.C.7. Retention / Detention Basin Standards 28
a) Design High Water of Basin 28
b) Storage volume 28
c) Drainage Systems for Water Quality Treatment 28
IV.C.8. Maintenance and Screening for Retention/Detention Ponds and Drain Fields 29
IV.C.9. Vault Access..... 30
IV.C.10. Trench Drain Standards.....30
IV.C.11. Percolation and Soils Investigations 31
IV.C.12. Erosion and Sedimentation Control Plans 31
IV.C.13. Stockpiles 32
IV.C.14. Excavation of Mines and Borrow Pits 32

IV.D. Detail Drawings ..... After 33

City of Tampa
Stormwater Technical Standards Manual
For
Private Development

SECTION I - INTRODUCTION

I.A. Stormwater Management in Tampa

The City of Tampa manages the impact of stormwater runoff in compliance with the Federal Clean Water Act as reauthorized in 1987 and the State of Florida's Chapter 62-40 F.A.C., the State Water Policy. These documents both give authority to and require local governments to lessen the impact of excess runoff on flooding and pollution caused by the stormwater management system.

The State Water Policy states the City must adopt a Stormwater Management Plan which lays out the methodology whereby stormwater will be managed. The City of Tampa Stormwater Management Plan is the Stormwater Element of the City of Tampa Comprehensive Plan. The Stormwater Element contains goals, objectives and policies which set out the City's approach to controlling the effect of stormwater runoff on the citizens of Tampa and the environment.

Tampa Code gives the official (the Mayor or his designee) authority to establish/publish technical standards and adopts them by reference. They have, therefore, the force and effect of law. The Stormwater Technical Standards Manual for Private Development sets forth those standards which fulfill the goals, objectives and policies from the Comprehensive plan which affect development and redevelopment and the construction of stormwater improvements. Our overriding goal in regulating new and redevelopment is to ensure the project has no negative offsite impacts i.e. that it does not make either a flooding or pollution problem worse.

The City of Tampa Department of Sanitary Sewers, Stormwater Management Division (SMD), in consultation with the citizens of Tampa, the development community and the engineering community have established these minimum standards, guidelines, criteria and design aids for the control of stormwater runoff. The goal of the manual is to provide individuals with the standards and procedures associated with the design of private drainage facilities to control the off-site impacts of that development. For purposes of this manual, private facilities are those facilities built on property separate from the right-of-way. Guidance and standards are also provided for construction of incidental improvements within the right-of-way associated with private development. Standards for the construction of the municipal system and improvements associated with the development of large subdivisions are incorporated into the City of Tampa Stormwater Technical Standards Manual for Public Improvements, published separately by the Stormwater Management Division.

I.B. Organization

The manual is arranged to provide the necessary information in as useful a format as possible given the amount and complexity of the material. It is divided into four sections; Introduction and Glossary, Basis of Review, General Development Requirements, and Design Standards.

I. **Introduction and Glossary** - Describes the rationale and authority of the manual as well as provides definitions for use in the manual.
II. **Basis of Review** - Classifies general development activities and references the location of standards for each.
III. **General Development Requirements** - Describes requirements for all new and

redevelopment projects.

IV. Design Standards - Technical standards for development activities.

I.C. Glossary:

The following definitions are for the purpose of making clear and distinct the intentions of the language used in this manual except where specific definitions are used within specific sections. For the purpose of such sections, the following terms, phrases, words, and their derivation shall have the meaning given herein and not be inconsistent with the text. Words used in the present tense include the future tense; words used in the plural number include the singular number; and words in the singular number include the plural number.

Adverse Impacts. Any modifications, alterations, or effects on a feature or characteristic of water bodies or flood prone lands including their quality, quantity, hydrodynamics, surface area, species composition, living resources, aesthetics or usefulness for human or natural uses, which are or potentially may be harmful or injurious to human health, welfare, safety or property, biological productivity, diversity or stability, or which reasonably interfere with the enjoyment of life or property including outdoor recreation or cause damage to adjacent property owners`. The term includes secondary and cumulative as well as direct impacts.

Area of New Construction. The area disturbed by the construction of a redevelopment project. This area will include, but is not limited to; building expansions, parking lot construction or reconstruction (excluding resurfacing only), and ponds.

Attenuation. To limit stormwater flow to reduce downstream impacts. (See also "Detention").

Best Management Practices (BMPs). Means whereby pollutant loading to downstream elements are reduced. BMPs can be either structural (see Stormwater Treatment Facility) or non-structural practices. Non-structural practices include, but are not limited to, inlet cleaning, street sweeping, and detention pond maintenance.

Borrow Pits. An excavated area where material has been removed for use as fill at another location.

Capacity Analysis. A determination of a Stormwater Management facility's ability to provide a given Level of Service.

Channel. A natural or artificial watercourse of perceptible extent, with a definite bed and banks to confine and convey continuously or periodically flowing water. Channel flow thus is that water which is flowing within the limits of the defined channel.

Closed Drainage Basin. A drainage basin with no structural outfall. The discharge from a closed drainage basin is limited to percolation (and other groundwater flow), evaporation, and evapotranspiration.

Commercial Development. Any development consisting of more than one (1) single family residence.

Construction. The act of altering land or vegetation in preparation for development, or any action or activity which results in an alteration of either land, vegetation, or existing structures or the building of new structures.

Conveyance. Transport of stormwater via pipe and/or open channel system(s).

Design Capacity. The amount of flow a storm sewer system is designed to manage, usually expressed in cubic feet per second for flow and cubic feet or acre feet for storage.

Detention or To Detain. To temporarily store stormwater in such a way as to limit its flow, either to limit downstream impacts or provide treatment for water quality.

Detention Basin. A stormwater facility designed to capture and limit stormwater flow (by releasing it at a reduced rate) in order to reduce downstream impacts or improve its quality.

Developer. Any person who acts in his own behalf or as the agent of an owner of property and engages in alteration of land or vegetation in preparation for construction activity, development, or any action or construction activity which results in an alteration of either land, vegetation, or existing structures.

Ditch. An open stormwater conveyance facility with side slopes steeper than three units horizontally to one unit vertically (3:1).

Drainage. A general term applied to the removal of surface or subsurface water from a given area either by gravity or by pumping, commonly applied herein to surface water.

Drainage Basin. Any land area from which the runoff collects at a common point or receiving water.

Drainage System. The surface and subsurface system for the removal of water from or control of water on the land, including both the natural elements of streams, marshes, swales and ponds, whether of an intermittent or continuous nature, and man-made elements which include culverts, ditches, channels, piping, and storage facilities. The storm sewer system may be referred to as a stormwater management facility, conveyance system, etc.

Elevation. Height in feet above mean sea level referenced to the USC & GS (N.O.S.) National Geodetic Vertical Datum of 1929 (NGVD) or other nationally recognized standard.

Engineer of Record. An individual registered by the State of Florida as a Professional Engineer. Further, the individual must be registered to perform engineering assignments in the specific technical field of Civil Engineering and such engineering practice must not be in conflict with subparagraphs (2)(d), (5)(d) of Rule 21H-19.02 of the Rules of the Department of Professional Regulation, Board of Professional Engineers.

Erosion. The general process whereby soils are moved by flowing surface water, wind, or mechanical action.

Erosion Control Plan. A plan to control on-site soil that may ordinarily be moved by flowing surface water, wind, or movement of vehicles. The erosion control plan may consist of a separate and distinct plan or details and notes on the site plan as appropriate for the location and proposed activity.

Excavation. The action or process of creating a depression or hole in the ground greater than two (2) feet in depth by moving and/or removing the soil.

Exfiltration Trench. A sub-surface facility designed to convey stormwater into the underlying soil, providing treatment through filtration and volume reduction.

Fence. A structure having openings no larger than six (6) inches wide and constructed to prevent

accidental or unauthorized entry to an area.

Filling. The action or process of raising the elevation of the property by bringing in soil from off-site or by reconfiguring the soil on-site.

Flood. A temporary rise in the level of water in rivers, streams, watercourses, lakes, drainage systems, depressions, etc., which results in inundation of areas not ordinarily covered by water.

Flood Plain. Land which has been or may be covered by water as a result of a storm event, including but not limited to the 100-year flood.

Flood Prone Lands. Lands which are subject to periodic inundation by water; the flood plain associated with the 100-year flood; those lands frequently subjected to inundation; and those lands identified as "Red Line" lots by the Department of Sanitary Sewers due to frequent localized flooding problems.

Flowpath. The direction or course which stormwater would move or flow due to natural or modified land surface elevations.

Grading. The action or process of changing the elevation contours of a specified site.

Grading Plan. A plan to accurately show the proposed change in elevations of a specific site.

Impervious Surface. Land surfaces which do not allow (or minimally allow) the penetration of water. It includes surfaces such as concrete, asphalt and most conventionally surfaced areas such as streets, roofs, sidewalks, parking lots, and other similar structures constructed of similar materials (not shell or clay.)

Inlet. A structure which allows stormwater to flow into a conveyance system.

Internally Drained. The surface water runoff from a parcel does not discharge into an off-site area.

Level of Service. A degree of stormwater facility function or ability. "Capacity of a storm sewer system"

Lot. A platted portion of land identified as a single unit in a subdivision and intended for lease, transfer of ownership, use or improvements, or a combination thereof. The term lot includes the terms "plot," "parcel," or "tract."

Manhole. A structure which allows access to a stormwater management facility but is not designed to allow the input of stormwater directly from the surface.

Master Basin Plan or Study. An in-depth investigation into the drainage needs of a particular drainage basin. Usually limited to large basins where the expected improvements will entail large expenditures and phasing.

Mine. A pit or excavation in the earth from which minerals or earthen products are taken for use elsewhere.

Models. Approximations of the hydraulics and hydrology of a drainage basin based upon mathematical derivations of quantifiable relationships between various factors. These factors usually include, but are not limited to, area, slope, drainage system characteristics, rainfall, and land use.

New Development. The development of a parcel in pre-developed conditions i.e . in a pervious condition or natural state.

Normally Supervised. Customarily watched over and controlled by a person designated by the permittee, who will be at the site during the times that children may be in the general area and can hear and observe all activity on the site.

Obstruction. Any dam, wall, wharf, embankment, levee, dike, pile, abutment, projection, excavation, channel rectification, bridge, conduit, culvert, building, wire, fence, rock, gravel, refuse, fill, structure, or matter in, along, across, or projecting into any channel, watercourse, flow path or flood plain area which may impede, retard, or change the direction of the flow of water, either by itself or by catching or collecting debris carried by such water, or that is placed where the flow might carry the same downstream to the damage of life or property.

Official. The Mayor of the City of Tampa or his or her designee.

Outfall. Location where stormwater flows out of a given system. The ultimate outfall of a system is usually a "receiving water."

Owner, Tenant, Occupant. Shall include the executors, administrators, successors, and assigns of the person referred to; and the covenants and agreements contained in any contract between the department and its consumers should be binding upon and inure to the benefit of the successors, heirs, executors, administrators, or assigns of the respective persons thereto.

Percolation. The ability of water to pass through a porous medium; in most cases, the soil.

Permit. Regulatory document issued by the City which is needed before any development operations can be made (including clearing, grubbing, grading, filling, excavation, or any other construction operations).

Pervious. An area which is, under standard conditions, permeable to stormwater runoff and surface water.

Positive Outfall. A direct connection to a receiving water or City stormwater management system. Discharge to the street may qualify if it meets criteria of Section IV.C.6.

Public Drainage System. Drainage systems located on or draining water from public rights-of-way or easements.

Pre-Developed Conditions. For new development, raw land in a pervious condition or natural state before alteration (i.e., runoff coefficient approximately .20). For redevelopment projects "pre-developed conditions" include permanent impervious surfaces (not shell or clay) on the site./

Receiving Water. Any water bodies or watercourses into which surface waters ultimately flow either naturally, in man-made ditches, or in a closed conduit system. Specifically: The Hillsborough River, Old Tampa Bay; Hillsborough Bay; McKay Bay.

Redevelopment. The development of a parcel with existing improvements on the site. Existing improvements include those on the site on or before October 1, 1984.

Red Line Property. Those properties which experience or may be reasonably expected to experience

frequent localized flooding problems or which may have other problems associated with stormwater management.

Retention or To Retain. To store stormwater to prevent its discharge into receiving waters or to provide a storage facility for stormwater where no outfall is available.

Retention Basin. A stormwater facility which has no structural outfall and the discharge from which is limited to percolation, evaporation, and evapo-transpiration.

Right-of-Way. Land dedicated, deeded, used or to be used for a street, walkway, boulevard, drainage facility, access of ingress and egress, or other purpose by the public, certain designated individuals or governing bodies.

Sediment. Fine particulate material, whether mineral or organic, that is in suspension or has settled in a water body or has been deposited by flowing water, wind, or other sources.

Service Area. The corporate limits of the City of Tampa.

Sinkhole. A depression in karst terrain caused by the collapse of the underlying rock and soil. May be dry or wet, depending on the elevation of the surrounding aquifer in relation to the bottom of the sink. A common feature of closed drainage basins.

Site. The property limits of a development or redevelopment. Included in the definition of a site are parking and other areas used by the site even if not contiguous.

Stockpile. The storage of soil or earthen products during construction activities or at a specific site in accordance with a site earthwork and drainage plan.

Stockpile, Temporary. The short-term storage of soil or earthen products during construction activities at a specific site in accordance with a site earthwork and drainage plan.

Stormwater. Flow of water which results from and which occurs immediately after a rainfall event.

Stormwater Management System. See Drainage System.

Stormwater Retention/Detention Pond. Any excavation or contour of earth designated or intended for the retention or detention of stormwater or any natural contour, which retains or detains stormwater.

Stormwater Treatment Facility. A structural "Best Management Practice" (BMP) designed to reduce pollutant loading to a receiving water by either reducing the volume of flow; allowing the biological uptake of pollutants or by allowing pollutants to settle out of stormwater flow. Structural BMPs include, but are not limited to, detention basins, retention basins, open bottom inlets, undercut ditches, exfiltration trenches, and swales.

Street. Any access way such as a road, lane, highway, avenue, boulevard, parkway, viaduct, circle, court, terrace, place, or cul-de-sac and also includes all of the land lying between the right-of-way lines as delineated on a plat showing such streets, whether improved or in rights-of-way intended solely for limited utility purposes, such as for electric power lines, gas lines, telephone lines, water lines, drainage and sanitary sewers, and easements or rights-of-way of ingress or egress. The functional classification of streets such as arterial collector, etc., shall be per the DPW, Transportation Division.

Subdivide. The division of lands into three (3) or more lots, blocks, tracts, or other portions, however designated, to provide for or necessarily require the establishment or extension of streets, alleys, or

other rights-of-way.

Surcharge. Flow out of a stormwater facility at a point upstream from the outfall resulting from inflow into the system in excess of its designed capacity.

Swale. An open stormwater conveyance facility with side slopes equal to or shallower than three units horizontally to one unit vertically. (Generally very shallow.)

SWFWMD. Southwest Florida Water Management District. One of five water management districts organized by the state to oversee the management of surface and subsurface water resources in the State of Florida. SWFWMD is the local district for the City of Tampa.

Time of Concentration. The time required for water to flow from the most distant point of a drainage basin to the measurement or collection point.

Watercourse. Any natural or artificial channel, ditch, canal, stream, river, creek, waterway, or wetland through which water flows in a definite direction, either continuously or intermittently, and which has a definite channel, bed, banks, or other discernible boundary.

Watershed. A drainage area or drainage basin contributing to the flow of water to a common point ultimately, in this area, a receiving water or sinkhole.

Wetland. Land that is inundated or saturated by surface or groundwater at a frequency and duration sufficient to support, and that under normal circumstances does support, a prevalence of vegetation typically adapted for life in saturated soil conditions.

I.D. Outside Agency Review

Activities regulated by this manual may also be subject to other regulations and/or permit requirements from other agencies. An approved permit from the City does not constitute permission from any other agency to construct those improvements. Property owners are responsible for obtaining all appropriate approvals or permits prior to construction.

I.E. Review and Update

To keep the manual current, a timely review of policies, procedures and criteria will be performed by the SMD with revisions being produced as required.

I.F. Warning and Disclaimer of Liability

The degree of protection obtained by use of regulations presented in this manual is considered to provide a reasonable level of flood protection and is based on sound and accepted engineering practice. Flooding may occur or flood heights may be increased by man-made or natural causes. This manual does not imply or guarantee that areas or properties permitted will be free from flooding or flood damages. This manua_l shall not create liability on the part of the City of Tampa or any officer or employee thereof for any flood damages that result from reliance on this manual or any administrative decision lawfully made thereunder.

I.G. Repeal of Conflicting Policy, Procedures, and Criteria

The policies, procedures, and criteria presented in this manual supersede all previously distributed

material and constitute the most current stormwater regulatory standards available.

I.H Violation and Enforcement

In any instance in which any land is, or is proposed to be, used in violation of this manual, the City Attorney may, in addition to other remedies provided by law, institute injunction, abatement or any appropriate action or actions to prevent, enjoin, or abate unlawful use. In addition, upon a finding by the Stormwater Management Division that any provision of this manual or ordinances has been violated, all development and building permits issued to the violator will be suspended or held in abeyance until the violation has been corrected to the satisfaction of the Stormwater Management Division.

I.I Effective Date

The manual shall be in full force and effect from and after its adoption by City Council. Updated editions of this manual as approved by Council shall supersede all previous editions.

I.J. Deviations from Standards

The standards in this manual were developed to protect the lives and property of the citizens of Tampa. Deviations from these standards may only be permitted if approved by the official or his designee in cases where such a deviation will not appreciably alter the project's impact on the basin.

I.K. Abandonment of Existing Stormwater Management Facilities

Existing stormwater management facilities cannot be abandoned or diminished in capacity without replacing the treatment and attenuation capacity onsite or at an alternate location approved by the SMD.

SECTION II - BASIS OF REVIEW

For purposes of this manual projects will be subject to requirements and standards as follows:

II.A. Residential

1. One (1) Detached Single Family Dwelling - General Development Requirements only.

2. One Single Family with impervious surfaces (not including the water surface of pools) greater than 50% of entire site - General Development Requirements and Minimum Retention/Detention Standards.

3. One Duplex - General Development Requirements only.

4. More than One (1) Residential Dwelling or Duplex - General Development Requirements and Standard Commercial requirements.

5. Small Affordable Subdivisions (Less than 10 lots) - General Development Requirements and Small Subdivision Requirements (IV.B.3.)

6. Large Subdivisions ($\geq$10 lots) - Not subject to the requirements of this manual. Large Subdivisions are subject to the standards of the City of Tampa Stormwater Technical Standards Manual for Public Improvements.

II.B. Commercial Redevelopment Projects

1. Redevelopment Projects $\leq$3000 Square feet of New Construction - General Development Requirements only. No retention/detention requirements.

2. Redevelopment Projects >3000 Square Feet of New Construction - General Development Requirements and Standard Redevelopment Requirements.

II.C. New Commercial Development Projects

1. New Commercial Development $\leq$10,000 s.f. - General Development Requirements and Minimum Retention/Detention Requirements. No attenuation requirements.

2. New Commercial Development >10,000 s.f. - General Development Requirements and Standard Commercial Requirements.

II.D. Exceptions/Exemptions

1. Projects in Basins with Adequate Stormwater Management Facilities - General Development Requirements only. No City stormwater retention/detention requirements.

2. Projects in Ybor City or Downtown CRA - General Development Requirements only. No City stormwater retention/detention requirements.

3. Developments With Outfalls Directly to Receiving Waters - General Development Requirements and Minimum Retention/Detention Standards. No City stormwater detention requirements.

SECTION III - GENERAL DRAINAGE REQUIREMENTS

All projects are subject to the provisions of the requirements of this section, as applicable.

III.A. Documentation Requirements

The developer is required to provide sufficient documentation to the permitting department to ensure the standards of this manual are being met. Documentation requirements for projects may vary due to differences in their complexity, potential offsite impacts and other factors.

III.B. Finished Floor Elevation Requirements

Finished floor elevations (living and non-living space) shall be a minimum of 6 inches above any recorded flood elevation.

All living space must be a minimum of 1.5 feet above the crown of the street adjacent to the respective property, with all other floor elevations being 1.0 foot above the crown. Waivers to these requirements may be granted when the condition and/or topography of the site is such that no practical purpose would be served by their enforcement.

A request for a waiver from these requirements may be submitted on appropriately executed forms. Waivers will be approved provided the authorized official agrees the risks are minimal with respect to the flooding potential of surrounding buildings and the land in question.

Exceptions to the formal waiver procedure may be granted if all of the following conditions are met:

1. The proposed project is an addition less than 500 square feet; and

2. The proposed slab is no lower than the existing floor; and

3. Conditions and/or topography of the site indicate the risk of flooding is minimal.

III.C Grading and Excavation Requirements

1. Grading

Chapter 21 of the City of Tampa Code stipulates an appropriate permit for any action which changes the existing and/or natural contours of a site.

Sites must be graded such that all stormwater runoff drains to the nearest public right-of-way or drainage facility without crossing or causing detrimental impact to adjacent property. Minor exceptions to this grading policy may be granted when the site topography is such that there is no practical way to divert all runoff to the street. However, portions which may be allowed to continue to drain according to natural patterns will be restricted to pervious areas left in a natural configuration and the runoff patterns are clearly indicated by pre-construction elevations. This exception is not applicable for side slopes of filled areas.

The proposed work must comply with the following requirements:

a. Side Slope - Unless restrained by an approved retaining wall (Section III.O), terracing or other accepted stabilizing method, the maximum side slope for any fill shall be two (2) feet horizontal to one (1) foot vertical.

b. Erosion Control - All sites must have an erosion control plan addressing waterborne erosion, windblown erosion, and sediment deposited by vehicles entering or leaving the site. The erosion control plan may consist of, but is not limited to, either a temporary system installed by the applicant or a twenty (20) foot wide buffer of undisturbed vegetation. In all instances, the plan must remain in effect until the site is permanently vegetated.

2. Excavation Requirements

Proposed excavation must comply with the following requirements. Standards for mines and borrow pits are located in IV.C.14.

a. Setback. The minimum horizontal setback from any property line to the top of bank is four (4) feet. The minimum horizontal separation from any sidewalk, normal pedestrian area, slab or grade type patio, vehicle driving or parking area or leisure activity area to the top of bank for any excavation is four (4) feet unless separated from the excavation by a fence.

Maximum slope within a setback area is one (1) foot vertical to six (6) feet horizontal.

b. Depth - Depressions less than or equal to two (2) feet shall be considered a function of grading.

c. Side Slope - Side slopes shall not promote erosion, shall be easily maintainable, and shall be appropriate for the soil conditions. The maximum allowable side slope for an excavation without a fence is two (2) feet horizontal to one (1) foot vertical. There is no maximum side slope for fenced excavations.

d. Fencing - All proposed excavations greater than two (2) feet in depth with an overall side slope steeper than two (2) feet horizontal to one (1) foot vertical (2:1) shall be fenced, whether the excavation is ongoing or complete. The minimum fence height shall be forty-two (42) inches on normally supervised sites and shall be six (6) feet in all other instances. Vertical walls less than two (2.0') deep do not require fences.

e. Maintenance - A written maintenance plan is required for all excavations, said plan providing for access to all areas within the excavation and providing for the maintenance thereof.

f. Erosion Control and Stabilization - All sites must have an erosion control plan addressing waterborne erosion, windblown erosion, and sediment deposited by vehicles entering or leaving the site. The plan must remain in effect until the site is permanently vegetated.

Erosion protection shall continuously extend from two (2) feet beyond both the top of the bank and the toe of the bank for dry ponds. For wet ponds protection shall extend from two (2) feet beyond the top of the bank to two (2) feet below the design low water elevation.

Solid sod is permissible on side slopes of two (2) feet horizontal to one (1) foot vertical (2:1) or less. On all other slopes, fabric, terracing, paving, retaining walls, or other approved durable protection systems must be utilized.

III.D. Development Within Flood Prone and Restricted Areas

1. Development On Red Lined Properties

The City of Tampa maintains a listing titled "Stormwater Management Division Red Line Properties." This list is periodically updated and is available from the SMD, Planning Section or the Construction Services Center. This property may be restricted because of the need to acquire an easement for an existing or proposed drainage facility, illegal fill, and/or any area subject to periodic flooding. In addition, lands subject to periodic flooding may be determined using Federal Flood Insurance Rate Maps (FIRM), USGS studies, City records, or other reliable sources. Special considerations may be imposed upon the planned development of this property during the permitting procedure.

In order to protect and advise the current and any future owners of the property, the City may require the owner to execute a Hold Harmless Agreement. This agreement will be required for properties red lined because of flooding potential. The Hold Harmless Agreement will be on a form prepared by City Staff and signed, notarized, and executed by the owner in accordance with established procedure, and recorded in the Public Records of Hillsborough County prior to the issuance of the Building Permit. Under a Hold Harmless Agreement, a development is not excluded from any City requirements normally imposed upon development. Applicability of using the Hold Harmless Agreement will be determined on a case-by-case basis.

2. Special Allowances for Designated Drainage Basins

Throughout the City of Tampa are drainage basins which are subject to special drainage requirements and allowances based on City Master Drainage Plans and improvement projects or special studies. Information as to whether or not a site is within such an area may be obtained from the SMD or the CSC. If a site is within such an area, the SMD will issue any special drainage considerations upon request.

3. Development in Existing Low Lots

A request or an application for a building permit for construction in a lot which is lower than the street will require the following:

If the lot is lower than the street and receiving runoff from the road due to a low point in the road located along the front area of the lot in question, a building permit may be issued. However, no fill will be permitted, except as follows: Within the foundation limits, sufficient fill may be allowed to raise the building floor elevation to meet the minimum floor elevation requirements. The yard will not be permitted fill except in the event that a raised drain field is

required by the Health Department or if there will be no adverse offsite impacts. In these cases, detailed evaluation of off-site impacts will be required. If the project proposes fill and has no positive discharge for drainage, equivalent storage will be required.

If the lot is lower than the street but located at the top of a hill or between two street intersections where the grade in the road continues (no low point between intersections exist), then the yard may be filled provided neighboring property will not be adversely affected.

4. Equivalent Storage Within Flood Prone Areas

The City of Tampa maintains records of some properties that have experienced severe stormwater flooding. The limits of the flooding are shown in the Tampa Flood Zone Building Map and/or the City of Tampa Localized Flood Atlas. The storage capacity of the floodplain must be preserved or the result will be to relocate the flooding problem and usually to make it more severe.

In order to ensure that any proposed development will not decrease the floodplain storage capacity, all development will be evaluated for compliance with the following:

a. No earth fill may be placed within a flood hazard area unless an equal amount of flood storage volume is created by excavation below the base flood elevation and above the seasonal high groundwater table elevation.

b. No portion of any structure which reduces the storage capacity of the flood hazard area may be constructed within the limits of the flood hazard area unless equal replacement storage volume is provided by acceptable engineering techniques.

c. A flood hazard area is defined as an area that has experienced flooding in 1979 or later and is recorded in either the City of Tampa Localized Flood Atlas or the City Flood Zone Building Map.

III.E. Drainage Patterns not to be Changed to the Detriment of Neighboring Properties

Notwithstanding the issuance of a permit by the City and compliance with the requirements of Chapter 21, the act(s) of stockpiling material, grading, excavating, and other act(s) affecting drainage shall not change the surface drainage patterns to the detriment of neighboring properties or public rights-of-way.

By common law, an upstream property owner has an easement over lands of a lower owner for surface waters to flow or escape from his land by natural ways and routes. An upper property owner may not, without liability, change the point of discharge of surface waters, nor concentrate them in ditches, nor divert in one direction waters which would have escaped in another direction, nor discharge them at a higher velocity, nor add to their pollution and cause a downstream property adverse impact. Likewise, the lower owner may not, without liability, obstruct natural flow of surface waters onto his land, either by excluding it or causing backwater on his neighbor. In disputes between private property owners, it is the right of the injured private party to seek an injunction because of a private nuisance created when the drainage was altered.

III.F. Erosion and Sedimentation Control

Proposed temporary and permanent erosion and sediment control plans shall be submitted with each application for a development permit. These plans shall specify in detail the erosion and sedimentation control measures to be used during all phases of clearing, grading, filling, construction and permanent development, and accurately describe their proposed operation. In addition, these plans shall be in accordance with the latest applicable specifications and recommendations.

No clearing, grading, excavating, filling, or other disturbing of the natural terrain will be permitted until approved City erosion and sediment control measures have been installed, except those operations needed to implement these measures. All erosion and sediment control measures shall be continuously maintained during the construction phase of the development.

These erosion and sediment control measures shall apply to all features of the construction site, including street and utility installations as well as to the protection of individual lots.

III.G. Functional Stormwater System During Construction

During all phases of construction, all stormwater entering, leaving, or flowing through construction sites shall be controlled in a manner consistent with the approved stormwater plan and shall not adversely affect the drainage of the adjacent properties.

III.H. Certificate of Occupancy

Except as may be established by alternative City policy or procedure, no certificate of occupancy (C.O.) shall be issued unless and until all site work indicated on the approved plan, along with appropriate auxiliary requirements has been completed and satisfactorily verified. These items may include but are not limited to; engineer of record certification, certified record drawings of completed construction, properly permitted and inspected work within public rights-of-way or easement, delivery of easements and/or other agreements. Phased development must have the improvements complete for the phase of the development for which certificates are being sought.

III.I. Permits for Work in Public Right-of-way

Any work within existing or proposed public rights-of-way or easements will require a right-of-way permit. Some examples of drainage improvements that would require a permit are:

a. Connection of a private stormwater system to the City's storm sewer or ditch system both within and without an easement or right-of-way;

b. Driveway culvert installation;

c. Changes and/or additions to any City storm sewer system;

d. Changes and/or additions (including regrading) to any City ditch system;

e. Driveway construction or modification;

f. Changes and/or additions to any existing City pavement; or

g. Any construction, modification, or removal of items that occur within the limits of any City right-of-way or easement.

Permit requirements for construction within public rights-of-way may be obtained from the Department of Public Works Transportation Division permit section located on the Fourth Floor of the City Hall Annex. Questions may be directed to:

Utilities Coordinator
Department of Public Works
City Hall Plaza, 4th Floor East
Tampa, Florida 33602

III.J. Review of Off-site Improvements Associated with Commercial Development

In the event that public drainage improvements are necessary and are to be constructed by private development concerns, notification must be provided to the SMD.

All public improvements shall require conformance to design standards for public improvements which are described in the Stormwater Technical Standards Manual for Public Improvements.

Four sets of plans should be submitted to the DPW Utility Coordinator per III.J and include the following:

1. Plan and profile of the existing and proposed storm sewers or ditch (including affected drainage structure sizes - such as manholes, inlets, etc.) showing all existing utilities at scale of: H 1" = 20'; V 1" = 2'. Alternative scales may be accepted but must be approved by the DPW and SMD prior to submittal.

2. Letters of "No Conflict" for all utilities.

3. Construction notes for restoring right-of-way (shoulder, sidewalk, pavement, etc.) after the hook-up.

4. Erosion Control Plan

5. For further criteria to be used for improvements in the public rights-of-way, refer to the City of Tampa Stormwater Technical Standards Manual for Public Improvements.

6. Upon completion of work, one set of reproducible and one set of blue print of the "As-Built" plans or record drawings, signed and sealed by a Professional Engineer registered in the State of Florida, shall be submitted to the Stormwater Management Division, Department of Sanitary Sewers, City of Tampa.

NOTE: All work in the right-of-way shall be inspected by the Department of Public Works or their designee.

III.K. Protection of City Stormwater Management Systems

1. Structures in Drainage Easements

No permanent structures such as concrete foundations, pools, walls or buildings may be constructed in any City drainage easement or right-of-way.

2. Ditch Relocation

If an existing ditch within the City accepts stormwater runoff from public rights-of-way, then crosses private property prior to discharging to a receiving body or other public system, the SMD will require any proposed relocation of such ditches to be accomplished using suitably sized pipes or ditches for the full length of the relocation. Review and approval of such proposed relocations along with dedication of an appropriately sized drainage easement will be required by the SMD. Guidelines for easement requirements are found in Section III.N.

3. Retaining/Decorative Walls and Structures on Ditch Banks

Retaining or decorative walls, fences, or any other structure to be built along any City ditch shall be constructed a minimum of four (4) feet from the ditch top of bank.

III.L. Discharge to Sinkholes

No new discharges will be permitted into active sinkholes without water quality treatment and approval from the appropriate regulatory agencies.

III.M. Maintenance of Private Drainage Facilities

Any portion of a drainage system, including on-site and off-site facilities, that is constructed for development will be continuously maintained by the owner(s) or an entity identified by the developer such as a homeowner's association unless it is officially accepted by the City for maintenance.

In addition, where vegetation, debris or sediment has accumulated in such a manner as to interfere with the free flow of water or adequate functioning of drainage facilities, the SMD shall require the owner of such properties to clear and remove the debris or obstruction so as to permit the drainage system to function as permitted. Enforcement shall be as in City Code Chapters 1 and 21.

After notice and reasonably diligent efforts to have the owner of the property remove the debris or obstruction, City forces may be authorized to enter upon such drainage ways and clear or remove the debris or obstructions. The cost thereof shall be charged to the owner of the property where said debris and/or obstruction was generated.

III.N. Easement Requirements

Easements may be required over private property to ensure continued City access to public stormwater management systems. The minimum acceptable width for a public drainage

easement is fifteen (15) feet.

a. For pipe or box systems the minimum easement width may be calculated as follows: Easement Width = (2 X Trench Depth) + Width of structure

b. For Ditch Systems Smaller than 15' Wide (Access to one bank only):

Easement Width = 4 X Ditch Depth + Bottom Width + 20'

c. For Ditch Systems Greater than 15' Wide (Access to both banks):

Easement Width = 4 X Ditch Depth + Bottom Width + 40'

All calculated widths should be rounded to the next highest five (5) foot increment.

III.O. Retaining Wall Construction

For Commercial Development, any retaining wall adjacent to private property and/or public rights-of-way shall be constructed of a permanent material; specifically, either a cast-in-place concrete wall or a reinforced masonry block wall. The wall plans shall be designed, signed and sealed by an engineer and shall be comprised of a footing, reinforcement, concrete, grout, etc. as required.

For Residential Development, any retaining wall adjacent to private property and/or public rights-of-way which is taller or deeper than three (3) feet shall be constructed of a permanent material as above. Low retaining walls (3 feet and under) may be constructed of pressure treated wood. All wood members/posts must be set to a minimum depth into the ground equal to the height of the wall. Wooden retaining walls must adhere to City of Tampa Standards as shown in Section IV.D., Detail Drawings.

For All Development, retaining walls not adjacent to rights-of-way or other private property may be built of pressure treated wood, concrete or masonry. In addition, terracing may be allowed if properly designed and constructed.

In areas where there is a suspected high water table, soil information will need to be provided. An adequate drainage system of rock and perforated drain pipe will be necessary to allow for the drainage of any water in the soil. Any soil drainage must be channeled to an approved drainage system and not to neighboring property.

All lumber utilized shall be pressure treated with CCA (chromated copper arsenate) wood preservative chemicals. A certification of treatment from the mill shall be necessary prior to construction approval. The minimum retention of treatment for use in direct contact with the ground is .40 pound per cubic foot. The minimum retention for lumber used when it will be exposed to periodic wetting of fresh water is .60 pound per cubic foot and 2.50 pounds per cubic foot for salt water.

COMMERCIAL STORMWATER PONDS

STORM DESIGN CRITERIA

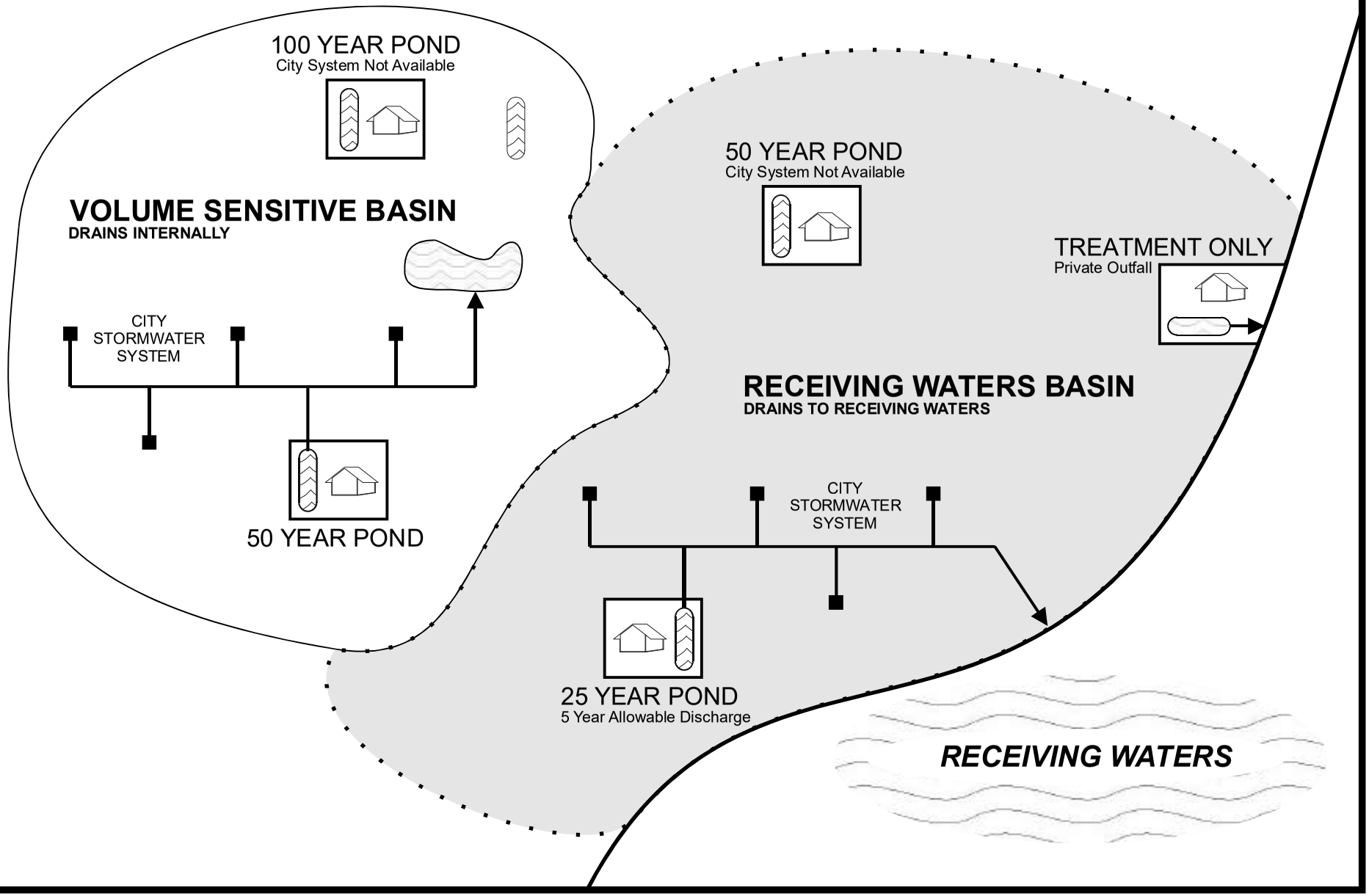

CITY OF TAMPA
STORMWATER RETENTION / DETENTION STANDARDS

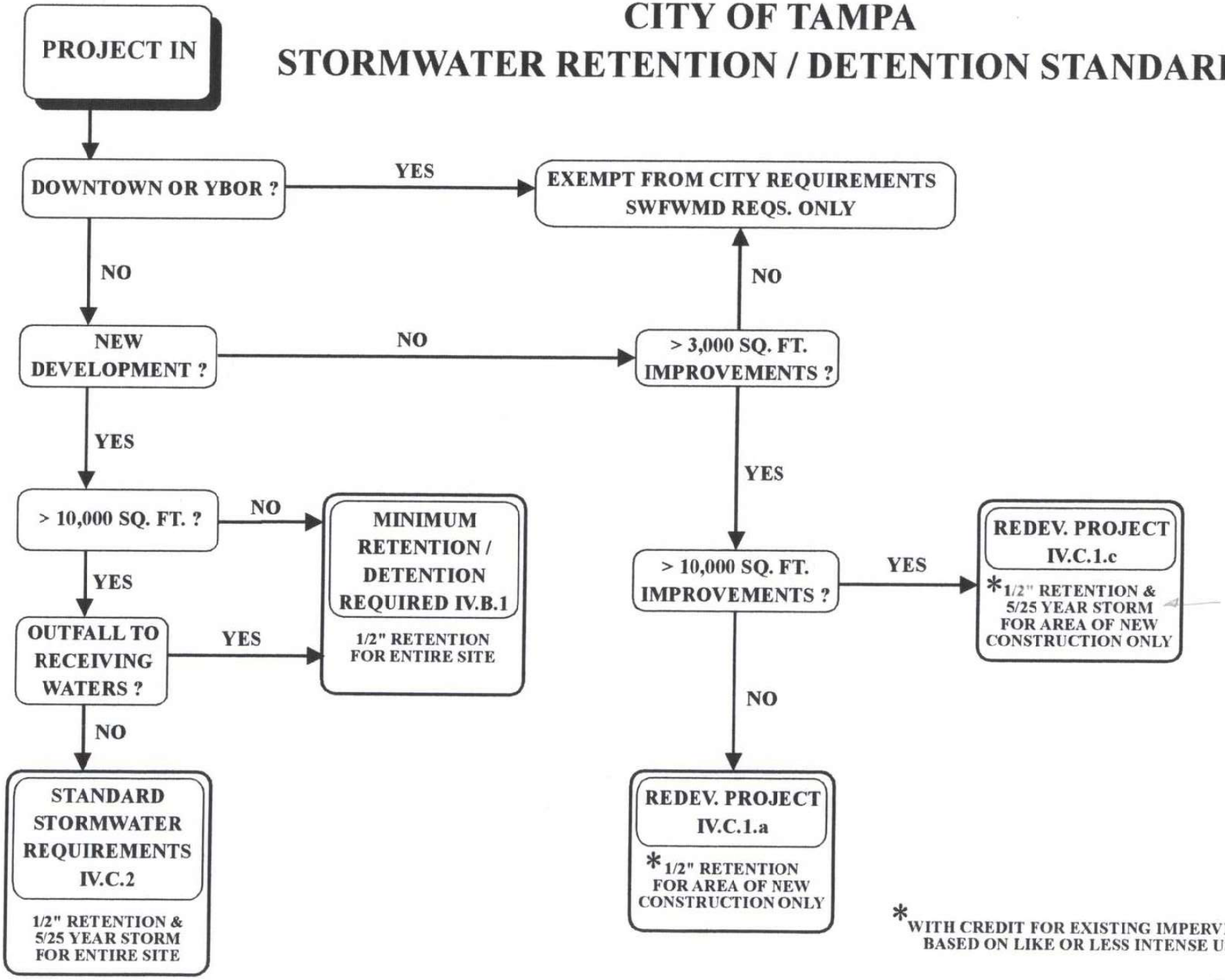

12/5/95

SECTION IV - DESIGN STANDARDS

This section defines the technical requirements for specific classes of development within the City of Tampa.

IV.A. EXEMPTIONS / EXCEPTIONS

The following projects are exempt from City Stormwater attenuation and treatment requirements. All projects must still comply with pertinent Southwest Florida Water Management District (SWFWMD) stormwater rules. All other City stormwater criteria from such as erosion and sedimentation controls, provisions for flow through water, control of discharge from roof downspouts, offsite drainage, etc. shall apply.

1. Single Family Residential and Single Duplex Exemption (IV.B.1 below)

2. Waiver of On-Site Drainage Requirements for Ybor City and Central Business District Community Redevelopment Areas

New Development and redevelopment projects within the Ybor City and Central Business District Community Redevelopment Areas, except Harbour Island, as defined by Chapter 163, Part III Florida Statutes, as amended, are exempt from City stormwater quantity and quality requirements.

3. Discharges to Basins with Adequate Stormwater Management Facilities

Projects which discharge to stormwater management systems constructed to accommodate the proposed project's intensity of development and 5 year discharge and which have water quality treatment for same are exempt from City retention/detention requirements. For information on this exemption contact the Stormwater Management Division Planning Section.

4. Minimum Retention / Detention Requirement Projects

The following projects are allowed a deviation from the standards located in IV.C. In lieu of the standard requirements the following will be applied:

The minimum retention/detention requirement is the retention of a volume equal to one-half inch (½") over the entire site.

Those projects eligible for the minimum requirements are:

a. Small Commercial Projects

New development of a parcel less than or equal to 10,000 s.f. which is not part of any larger development or redevelopment. Subsequent additions to the site within two years of the issuance of a certificate of occupancy will not be approved unless the entire site is brought into compliance with current standards found in IV.C.

b. New Developments With Outfalls Directly to Receiving Waters

Attenuation is not required for projects which have their own outfalls to the Hillsborough River, McKay, Hillsborough or Old Tampa Bays. Projects with discharges in close proximity to a City outfall may qualify for the Capacity Adjustment.

5. Capacity Adjustment

Stormwater attenuation and discharge rates may be adjusted based on a drainage capacity analysis performed by a registered engineer. At the request of the project engineer, capacity analysis of the specific drainage systems will be reviewed . Such analysis will conform to standard engineering practice and must prove the proposed discharge will have no negative offsite impacts to the receiving system.

IV.B. RESIDENTIAL STANDARDS

1. Single Family Residential and Single Duplex Exemption

The construction of, or additions to, one detached single family residence or duplex is exempt from City stormwater treatment and attenuation requirements except as stipulated in IV.B.2.

2. Residential Projects Exceeding 50% Impervious

Residential projects with impervious areas (not including the water surface of pools) greater than 50% of the total site exceed the design capacity of the City stormwater management system. In order to reduce this excess flow, the project must retain the first 1/2" of rainfall onsite. Subsequent additions to a site within two years of the issuance of a certificate of occupancy will not be approved unless the site is brought into compliance with this standard.

3. Small Subdivision Standards

Subdivisions are subject to the Commercial Standards found in Section IV.C. and the City of Tampa Technical Manual for Public Improvements. Exceptions for the attenuation requirements may be made for small residential subdivisions which have been certified by the City for affordable housing. Small affordable subdivisions may also be exempted from having a stormwater retention/detention facility located within a common area and

establishing a Homeowners Association.

a. Definition of Applicable Developments:

1. Subdivision certified by the City of Tampa as an Affordable Housing Project and so noted on the final plat and,

2. Subdivision must be comprised of less than 10 detached single family platted lots and,

3. Subdivision is not :
   a. Located in a Stormwater Management Division Red Line Area or,
   b. Located in a volume sensitive basin or Flood Hazard Area or,
   c. Contributory to an identified flooding problem.

b. Requirements:

1. For subdivisions located on an existing paved roadway - no stormwater attenuation or retention requirements.

2. If subdivision includes new roadway:

   a. Water quality treatment for entire subdivision.
   b. Roadway to meet all City standards and be dedicated to the City.
   c. Water quality treatment to be provided in swales in the right-of-way - City will assume responsibility for hydraulic maintenance, normal maintenance (mowing, trash removal etc.) will be responsibility of individual homeowners.

IV.C. COMMERCIAL STANDARDS

1. Drainage Review for Redevelopment

Redevelopment projects are required to limit the impact of the area of new construction that exceeds the existing impervious surfaces of a site. Specific requirements are:

If Area of New Construction is:

a. Less than or Equal to 3000 Square Feet

Project is exempt from City stormwater retention and detention requirements.

b. Greater than 3000 Square Feet but Less Than or Equal to 10,000 Square Feet

Project has no detention requirements. Must retain 1/2" of rainfall for the area of new

construction to satisfy water quality requirements.

c. Greater than 10,000 Square Feet

Project must retain 1/2" of rainfall and provide detention per Section IV.C.2. for the area of new construction only.

Notes:

Credit is granted for existing impervious surfaces as follows:

Water Quality Calculations - Credit for areas of like or less intense use than proposed

Detention - Credit for all existing permanent impervious surfaces

Treatment and attenuation areas need not be the actual area of new construction. Areas of equivalent size and use intensity on the site may be substituted.

2. Discharge / Detention/Retention / Water Quality Requirements

a. Discharge Requirements - Allowable Discharge

The maximum allowable discharge into a City system utilized in the design of private systems to serve new developments and redevelopments shall be limited to the peak discharge based on the 5 year FDOT Zone VI storm and the predeveloped condition. The time of concentration shall be determined utilizing the FDOT velocity of runoff chart or other methods approved by SMD.

b. On-Site Detention/Retention Requirements

On-site attenuation will be required for those project sites which exceed 10,000 square feet in area. Design criteria to be adhered to is outlined below for several City system outfall scenarios. Please note the SMD may impose more or less restrictive requirements based on the best available drainage studies and data.

i. Drainage Systems Designed with a Positive Outfall

If adequate drainage facilities are available to allow for the design of a detention system with a positive outfall into the City drainage system or gutter flow, the following criteria apply. A positive outfall is described as a direct pipe connection to the City stormwater system or direct discharge to a City street which meets the requirements of IV.C.6.

a. Detention requirements shall be based on the difference between the

allowable discharge and the calculated post-development runoff.

b. Allowable discharge is based on a 5 year DOT Zone VI storm and pre-developed conditions.

c. Post-development runoff is calculated for a 25 year, 24 hour, Zone VI storm and proposed impervious conditions.

d. If the appropriate data is supplied, percolation can be used to decrease the detention requirements.

e. The stored water shall be drawn down by a system within a 72 hour period.

f. Volumes for water quality requirements shall be retained below the 5 year discharge weir. Water quality volumes to be set by the SWFWMD and IV.C.2.c.

ii. Drainage Systems Designed Without a Positive Outfall

If adequate drainage facilities are not available, a retention system must be designed to provide for the storage of the stormwater runoff volume. The following criteria applies:

a. Retention systems shall be sized to store the runoff generated from the post- versus the pre-developed condition.

b. Post-developed runoff is calculated for a 50 year, 24 hour, Zone VI storm.

c. A design percolation rate, as determined in accordance with the Percolation and Soils Investigation Criteria Section IV.C.11., shall be used to draw down the stored water within a 72 hour period.

iii. Drainage Systems Designed in Volume Sensitive Basins

Volume sensitive areas have been identified and delineated on a reduced copy (1" = 400') of the drainage atlas, which is available for reference. Volume sensitive criteria is necessary to protect those drainage basins which are internally drained (lacking a positive outfall to one of the four receiving waters) although those areas may or may not have extensive system coverage.

a. Drainage System Designed With a Positive Outfall in a Volume Sensitive Area

i. Detention requirements shall be based on the difference between the pre-development allowable discharge and the calculated post-development runoff.

ii. Retention of the difference in volume between the pre-developed 50 year, 24 hour runoff and the post-developed 50 year, 24 hour runoff will be required prior to an allowable discharge from the site.

iii. After the above volume has been retained, discharge will be allowed at no greater than the pre-developed 5 year rate for the remainder of the 50 year storm.

iv. If appropriate data is supplied, percolation can be used to decrease retention/detention requirements.

v. The stored water shall be drawn down within a 72 hour period.

b. Drainage Systems Designed Without a Positive Outfall in a Volume Sensitive Area

i. Retention of the post-development runoff of a 100 year, 24 hour, Zone VI storm will be required.

ii. A design percolation rate, determined in accordance with the Percolation and Soils Investigation Criteria Section, shall be used to draw down the stored water within a 72 hour period.

c. Water Quality Requirements

Private development will provide treatment in accordance with the SWFWMD regulations; however, a minimum water quality treatment will be required by the City of Tampa SMD per the guidelines below.

i. New Development - Retention of 1/2 inch of runoff from the entire site. As an option, the permittee may provide retention of the runoff from the first 1" inch of rainfall.

ii. Redevelopment - Retention of 1/2 inch of runoff from the area of new construction with credit for existing impervious areas based on like or less intense use.

Baffles or other appropriate devices for control of floating material must be provided.

3. Culverts

a. Minimum Pipe Size

The minimum size of pipes to be used for culvert installations within the public right-of-way shall be 15" circular or 12" x 18" oval or elliptical.

b. Lengths of Structures

The minimum length of culverts without an appropriate vehicular barrier shall be the proposed width of driveway plus eight (8) feet for safety shoulder (four feet each side) The maximum slope within the shoulder area is six (6) feet horizontal to one (1) foot vertical. The maximum length of culverts without access shall be as follows:

15" - 36" pipe	350 feet
42" and larger and all box culverts	500 feet

Inlets will be required as necessary to allow inflow into the system. For subdivisions, inlet spacing will be as outlined in the Stormwater Technical Standards Manual for Public - Improvements. Street encroachment in excess of those standards in IV.C.6 will not be permitted.

c. Design Tailwater

All culvert installations will take into consideration the tailwater of the receiving facility or body of water or outfall. For discharge into retention/detention ponds with known discharge curves and submerged outfalls, the HGL may begin at the one half (½) the difference in elevation between the normal water level and design high water. For ponds designed for treatment only the tailwater shall be the weir crest elevation plus the flow depth at peak flow.

d. End Treatment

Headwalls or mitered end sections shall be provided at all inlet or outlet pipes. The headwalls shall be bagged sand cement, rip rap, poured in place concrete, acceptably reinforced or other approved structures placed in accordance with the specifications and standard drawings of the Florida Department of Transportation. Where flow velocities from pipes discharging to open channels exceed permissible velocities for the soil conditions in the receiving channel, suitable energy dissipating structures shall be installed to prevent erosion.

Where shallow ditches or storm sewers intersect deeper drainage ditches, erosion control

shall be provided.

e. Acceptable Materials

Reinforced concrete pipes at least ASTM 6-76-72A and precast or poured in place concrete boxes constructed in accordance with the specifications of the FDOT are allowable as culvert materials in the City of Tampa.

Double wall, smooth invert, plastic pipe suitable for H20 and E80 loading will also be accepted for residential culverts and may be considered for areas of non-vehicular traffic. Aluminum pipes may be used if the following requirements are met:

i. A culvert larger than forty eight (48) inches is required.

ii. The culvert is located outside the pavement and appropriate shoulder width.

iii. The City has no immediate plans (within 5 years) to close the ditch.

iv. Pipe shall have smooth or paved inverts.

All culverts, regardless of material, must be installed in strict accordance with the manufacturer's recommendations.

4. Stormwater System Criteria and Design

a. Flow Generation

The SMD requires the Rational Method to be used for all sites less than ten (10) acres in size. For sites larger than ten acres, other methods may be used with prior approval of the SMD.

b. Rainfall Curves

Design storms are to be obtained from the Florida Department of Transportation Zone VI Rainfall Intensity Curves.

c. Runoff Coefficients

Concrete Paved Areas	1.00
Water Areas at Design High Water	1.00
Roof Areas	.95
Asphalt Paved Areas	.95
Turf-Block Areas	.70
Grassed and Landscaped Areas	.20

Alternative runoff coefficients will be accepted if properly documented and calculated.

5. Outfall Pipes

Outfall pipes are to be no larger than necessary to flow the allowable capacity at the DHW head.

The maximum velocity of discharge into the City system for any outfall (including roof drains) is eight (8) feet per second.

Roof drains from buildings greater than ten (10) stories must be vented to avoid introducing pressurized air into the City system.

All utilities in the right-of-way which may potentially conflict with the outfall pipe shall be shown with the elevations. A right-of-way permit will not be required before building or site permit approval, but any apparent conflicts must be resolved and a Right-of-Way permit obtained prior to work performed in the right-of-way.

6. Discharge to Public Streets

A positive outfall can be claimed if gutter flow does not intrude onto other private property or encroach into the areas listed below:

The minimum street width to be unobstructed by stormwater shall be as follows:

Street Classification	Minimum Width in Either Direction
Arterial or Collector	10 feet in the outside lane
Local (All RS, RM, and RO zoning)	Half of the 6.5 feet design vehicle width
Local (All other zoning)	Half of the 8.5 feet design vehicle width

Should the developer desire to discharge into the street, his engineer must:

a. Provide a survey profile of the path of the gutter flow in 50-foot increments and provide cross sections at every change in the typical section and every 50 feet to the point of inlet into the City system.

b. Provide calculations (suggest a modified storm sewer tabulation form) to document the quantity of stormwater runoff entering the road from the last point of inlet to the system (or the basin boundary.) The quantities will be calculated at the time of concentration corresponding to the maximum rate of discharge from the proposed project reaching that specific point.

c. Solve the equation T = Z (nQ/KZS So 1/2)3/8 for every location identified in item

b. above.

Where T = Width of Spread (Ft.)

Z = Reciprocal of the Cross Slope = x/y

n = Manning's roughness coefficient

Asphaltic concrete pavement	= 0.016
Asphalt block pavement	= 0.025
Brick pavement	= 0.015
Concrete pavement	= 0.015

Q = Stormwater Flow (CFS) project discharge plus quantity calculated in item 2 above at corresponding time of concentration

K = Constant = 0.56

So = Longitudinal grade (Ft/Ft)

x = Horizontal distance between centerline of street and gutter

y = Vertical distance between centerline elevation and gutter elevation

d. Verify that the street width less the width of stormwater spread is greater than or equal to the "minimum width to be unobstructed by stormwater" as stated earlier.

Freeboard, percolation, and all other applicable design criteria and code requirements will be enforced.

7. Retention / Detention Basin Standards

a. Design High Water of Basin

Design high water elevation shall be established in consideration of adjacent properties and facilities, but normally one foot below the ground surface adjacent to the facility. If necessary, a minimum of one-half foot at the basin may be combined with the remaining half-foot elsewhere on the property for sites with positive outfalls.

b. Storage Volume

The net storage volume required will be in addition to the storage volume developed for satisfaction of water quality criteria less that part which is dewatered during the first 36 hours for wet ponds and 72 hours for dry ponds. Use of a detention/retention basin or drainfield shall require that an inflow/outflow curve be submitted together with the drainage calculations. The elevation of the pond volume in relation to the wet season (Aug.-Sept.) high groundwater table (Seasonal High Water -SHW) at the exit point from the pond shall be shown. All storage shall be above this groundwater level or, if a new SHW is to be established, above the new SHW as accepted by the SWFWMD. For dry ponds, the minimum difference between the SHW and the pond bottom is one (1) foot.

c. Drainage Systems for Water Quality Treatment

i. Volumes for water quality requirements shall be retained below the 5 year discharge

weir for systems designed with a positive outfall.

ii. Storage volumes shall be drawn down within a 72 hour period by natural percolation through the soil. The distance between the pond bottom and the seasonal high groundwater table shall be at least 1 foot.

iii. Detention facilities whose water quality storage volumes cannot be drawn down within a 72 hour period due to an insufficient percolation rate and/or a high water table will be required to stack the required attenuation volume over the water quality volume.

iv. Underdrains are not normally approved due to system clogging and failure. However, underdrain systems designed for continued functionality and ease of maintenance will be considered in cases where percolation is limited.

8. Maintenance and Screening for Retention/Detention Ponds, Vaults and Drain Fields

Maintenance

The maintenance of any privately owned drainage system included as part a development shall be the responsibility of the owner. This includes, but is not limited to, any scarifying or sediment removal in percolation ponds which is necessary to continue the specified infiltration rates and storage volume. Every project must provide a plan which shall include:

a. A program for proper maintenance of the bottom and sides of the retention basin to preclude silting up of the basin which would reduce its capacity or reduce the rate of percolation, and to prevent the basin from becoming a nuisance. Ponds with vegetation plans must have a maintenance element to those plans.

b. A program for proper maintenance of the interior of the vault or drainfield to preclude reducing its capacity or the rate of percolation, and to prevent the facility from becoming a nuisance.

c. A statement designating the entity which will be responsible for the operation and maintenance of the stormwater management system. Attached to the statement should be a defined maintenance program to ensure said system will function for the purpose for which it was intended. If the entity responsible for the operation and maintenance is not the entity for whom the engineering plans, specifications, and design analysis were submitted, then a letter should also be attached stating who the entity will be and its agreement to conform to the defined maintenance program.

Screening of Normally Wet Ponds

a. When a normally wet pond abuts a residentially zoned district, the method of shielding shall consist of solid masonry walls at least 6 feet in height along the boundary of the normally wet pond and the entire residential district.

b. Exemption from these criteria may be granted if the pond is established as an amenity to the development as indicated by a separate landscape plan to include:

i. Siting the pond near the interior of the development and/or:

ii. Features a minimum 15-foot maintenance berm; and

iii. Side slopes have a maximum steepness of 4:1 from the maintenance berm to the toe of the bank or a point six (6) feet below the normal water level; and

iv. Feature littoral zone plantings.

9. Vault Access

In order for maintenance of covered vaults to be realistic, a minimum vertical clearance of 4.0 feet at all points inside the vault must be provided. At least one access point shall be required for the first 250 square feet in the area; additional access points shall be provided for each additional 1000 square feet, or part thereof. Spacing locations should be designed for effective cleaning, ventilation, maintenance, and inspection. All access points shall be adequate for adult ingress and egress.

10. Trench Drain Standards

Underground trench drains employing filter gravel or rock bed and perforated pipe shall be designed according to the following general design criteria:

a. Thirty percent (30%) of the rock bed measured from the bottom of the rock to the design high water (DHW) elevation may be used for storage.

b. Forty percent (40%) of an expanded shale rock bed may be used for storage as above provided appropriate test documentation is provided by a reputable test lab.

c. The entire inside pipe area shall be allowed for storage if the crown is below the DHW.

d. The top and side surfaces of the rock bed shall be covered with a suitable membrane filter material in order to prevent silting of the voids in the rock bed.

e. The discharge of the required volume by percolation through the trench drains or other means shall be completed in a maximum of 72 hours after the end of the storm event.

f. Design high water elevation shall be established in consideration of adjacent properties and facilities, but normally one foot below the ground surface adjacent to the facility. If necessary, a minimum of one-half foot at the basin may be combined with the remaining half-foot elsewhere on the property for sites with positive outfalls.

g. Inlets shall be a sumped open bottom design to trap sediment before it can enter the

trench drain.

h. The distance between the trench bottom and the seasonal high groundwater table shall be at least 1 foot.

i. Aggregate for exfiltration trench shall comply with FDOT Standard Specifications for Road and Bridge Construction (1991) for coarse aggregate size number 5 (1 to 1/2"), except that no limestone, dolomites, or sandstones shall be used.

11. Percolation and Soils Investigations

a. Results of all percolation and soils investigations shall be certified by a Florida Registered Professional Engineer.

b. Sufficient test borings shall be made by a certified testing firm to a minimum depth of ten (10) feet below the bottom elevation of the basin or bottom of drain field in order to determine the groundwater table and soil classifications.

c. Percolation rates at the bottom elevation of the basin or bottom of a drain field shall be determined based on a Double-Ring Infiltrometer test (DRI), ASTM Designation D3385-75, or other engineered test procedure approved by the SMD. Percolation tests shall not be made in filled ground unless the soil has been thoroughly and mechanically compacted or allowed to settle for a period of six months or more.

d. For the DRI test, the adjusted field rate may be used on the bottom of the pond or drain field and 50% on the horizontal component of the sides up to the design high water.

f. The percolation rate in either case shall be reduced by ten percent (10%) for each foot the water table rises above the elevation ten feet below the bottom of the basin or bottom of drain field. The maximum allowable percolation rate after adjustment for water table elevation is 1.5 feet/hour.

g. There shall be at least one soils investigation per 10,000 square feet of pond bottom and one infiltration test per 20,000 square feet of pond bottom placed at appropriate locations. If multiple ponds are used, one soil boring and infiltration test will be required per pond regardless of the size. In addition, multiple borings or tests immediately adjacent to each other will not be accepted.

h. Where percolation from a pond bottom is to be considered, the final six (6) inches of grading shall not be completed until the development has been constructed. This procedure shall be included in the drainage plan.

12. Erosion and Sedimentation Control Plans

The submitted plans shall contain a systematic and comprehensive erosion and sedimentation control plan for both the construction phase and the completed project. The erosion and sedimentation plan shall consist of, but not be limited to:

a. Internal grading to route all stormwater runoff through the designed drainage system.

b. Temporary (hay bales, sedimentation fences, silt screens, etc.) controls shall be placed along the perimeter of the property to filter the flow of runoff.

c. The final grading of any retention or detention basin shall not be completed until the development has been completed.

d. Provisions at the construction site to minimize the tracking of soil, mud, concrete, etc., onto the public streets shall be provided.

13. Stockpiles

Permanent stockpiles are considered earthwork and outside storage and must be permitted. All stockpiles of earth, soil, or other earth products, whether temporary or permanent, shall comply with the following requirements:

a. Setback - No stockpile shall be placed within four (4) feet of an adjacent property line unless written authority is granted by the affected adjacent property owner or the stockpile is contained with an approved concrete or masonry wall.

b. Erosion Control - All sites shall have an erosion control plan in effect until such time as the stockpile is removed and the site is permanently vegetated. The erosion control devices may be an approved temporary system installed by the applicant or a twenty (20) foot wide buffer of undisturbed vegetation.

14. Excavation of Mines and Borrow Pits

A permit must be obtained prior to the excavation of any mine or borrow pit. In addition to the articles in III.C., the following criteria will apply:

a. A detailed development plan including scheduling, length of activity, reconstruction, and reclamation plans must be submitted with the application.

b. Reclamation plans will include littoral zones and aquatic plantings to establish a viable lake-based ecosystem. Side slopes will be consistent with long term stability.

c. Bond(s) or other surety must be posted to assure completion of the development plan. Bond amounts will be based on 125% of the City's and engineer's estimates (including contingency amounts) of the cost of the development plan.

d. Impacts of the development on the adjacent transportation network must be recognized and accommodated. Permission from the Department of Public Works must be obtained.

e. Dewatering activities may be considered the same as site drainage and both will be

regulated based on outfall conditions. Site plans must show pump locations, attenuation facilities, environmental protection facilities, and flow routes.

f. The reviewer may impose additional requirements as may be deemed necessary to ensure compliance with III.C. These requirement may include reports and/or studies and on-site inspection and control by specialized consultants during the permitted activities.

g. The permit will be valid for six (6) months.

IV.D. DETAIL DRAWINGS

Easement Requirements
Retaining Walls Standards
Culvert End Treatments
Downtown CRA
Ybor City CRA
Inlets/Manholes

EASEMENT GUIDELINES

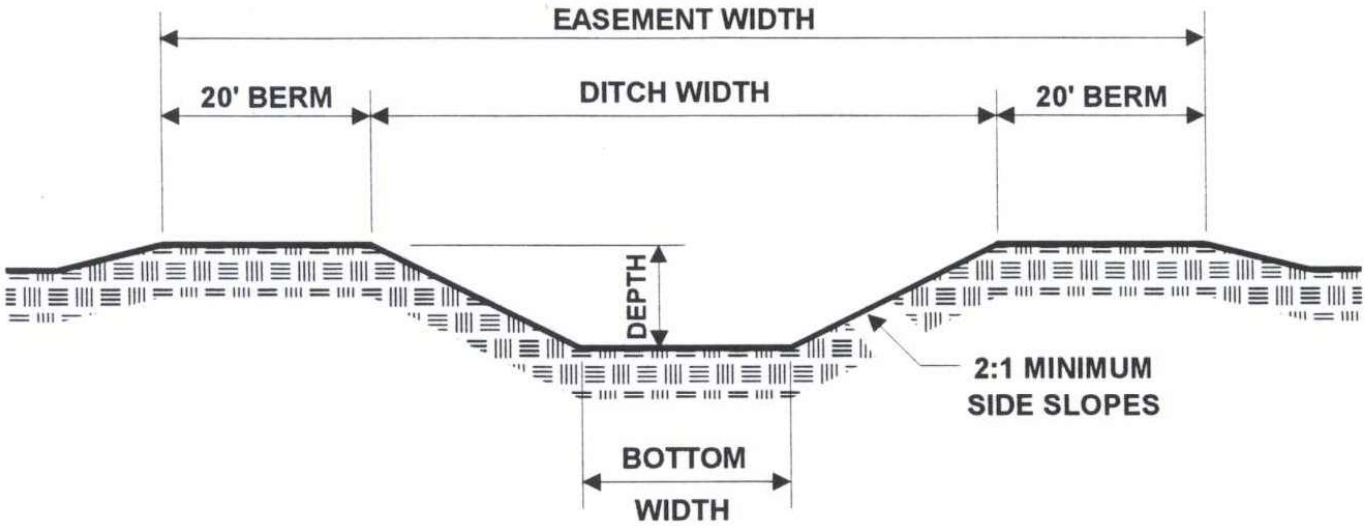

DITCH WIDTH	EASEMENT WIDTH	ACCESS
LESS THAN OR EQUAL TO 15'	(4 x DEPTH) + BOTTOM WIDTH + 20'	1 SIDE
GREATER THAN 15'	(4 x DEPTH) + BOTTOM WIDTH + 40'	2 SIDES

DITCH EASEMENTS

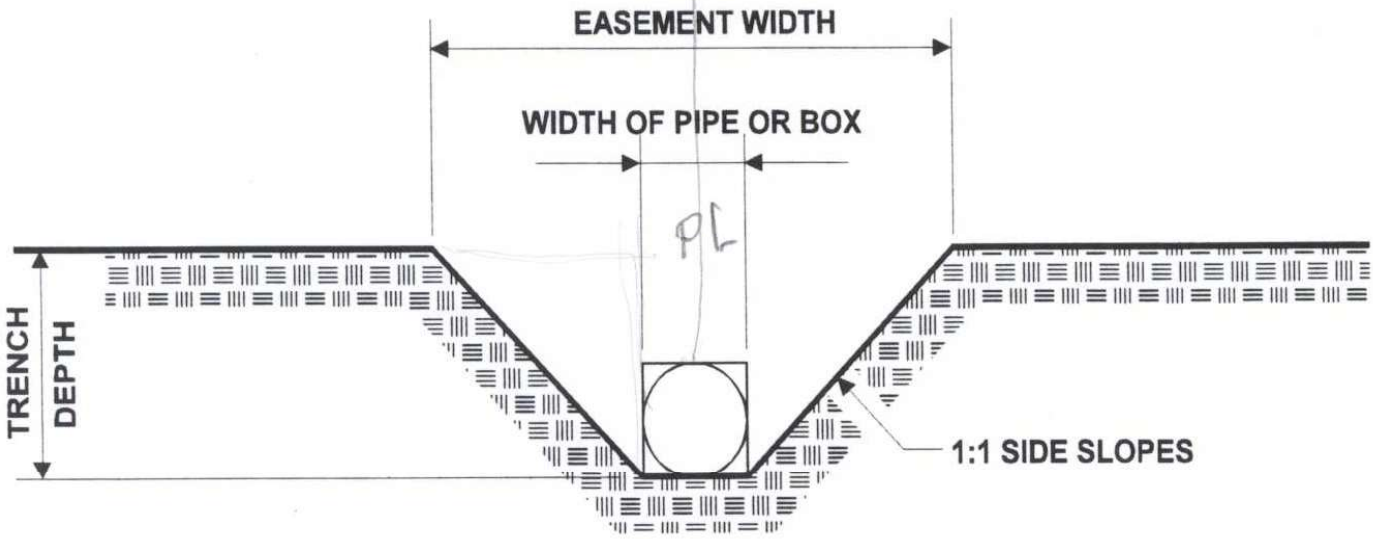

PIPE OR BOX EASEMENTS

EASEMENT WIDTH = (2 x TRENCH DEPTH) + WIDTH OF PIPE OR BOX

All Easements: 15' Minimum Width, All Calculated Widths Rounded Up To Next 5' Increment

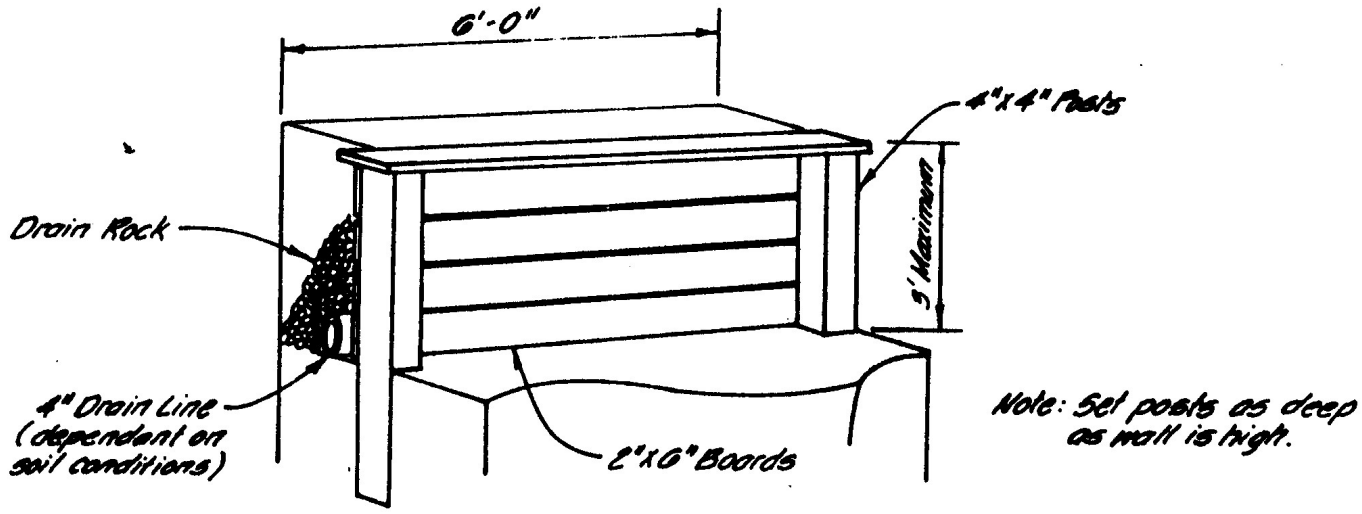

RETAINING WALL OF HORIZONTAL WOOD BOARDS

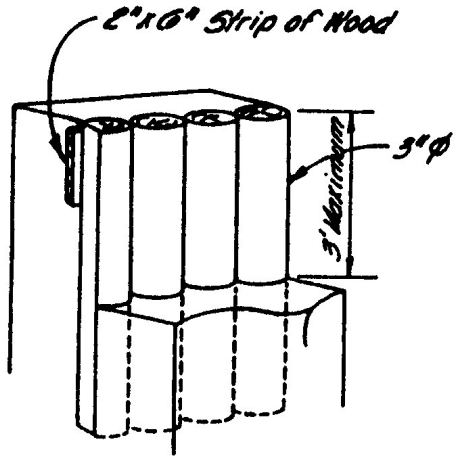

Note: Set posts as deep as wall is high.

RETAINING WALL OF VERTICAL WOOD MEMBERS

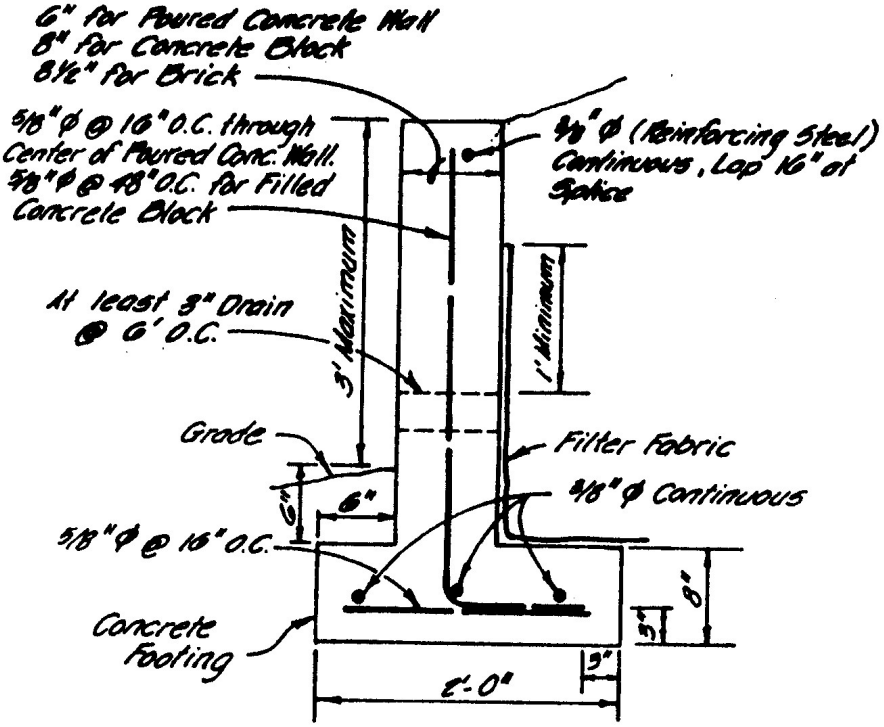

RETAINING WALL OF MASONRY CONSTRUCTION

CITY OF TAMPA

LOW RETAINING WALL STANDARDS

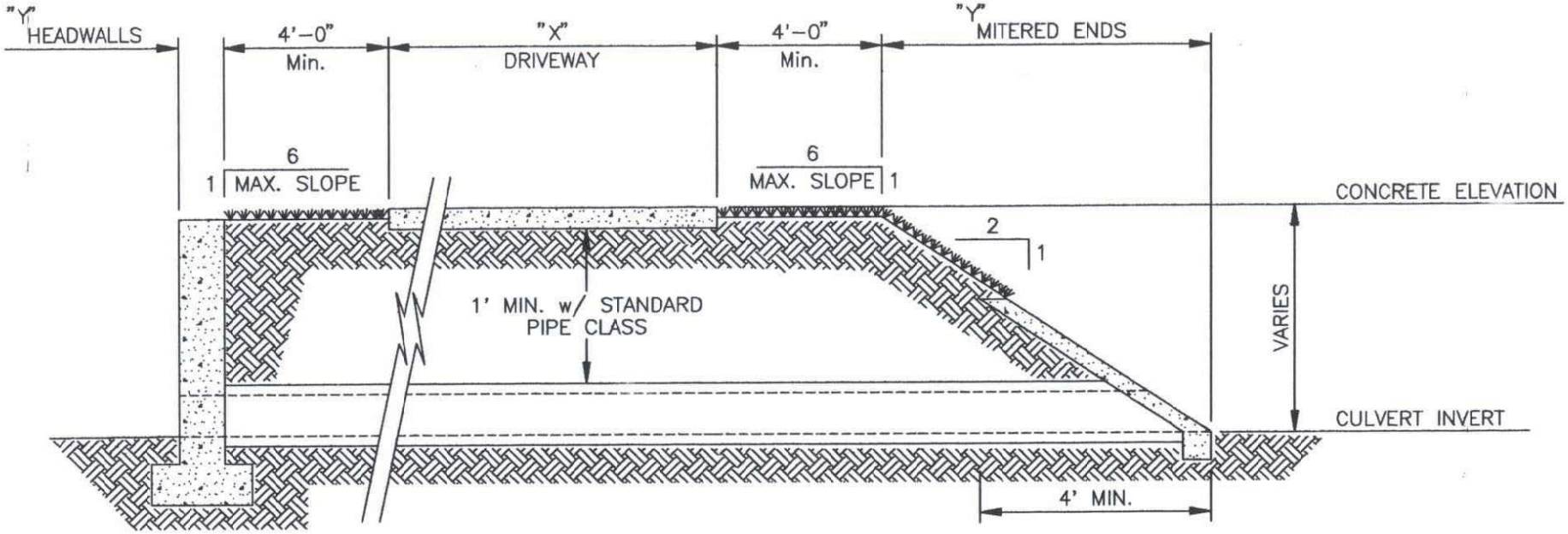

HEADWALL TYPE **MITERED END TYPE**

CULVERT CROSS SECTION TYPICAL DETAILS

N.T.S.

TOTAL LENGTH = X+8+2Y

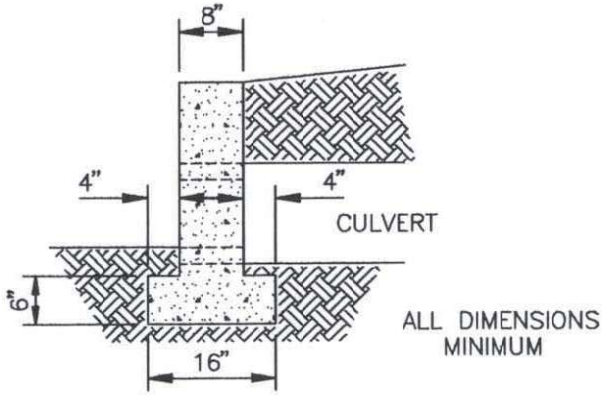

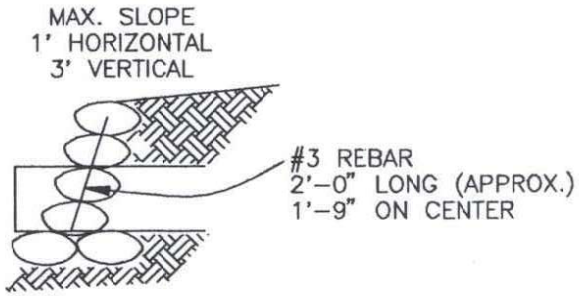

POURED IN-PLACE HEADWALL

N.T.S.

SAND-CEMENT BAG RIP-RAP HEADWALL

N.T.S.

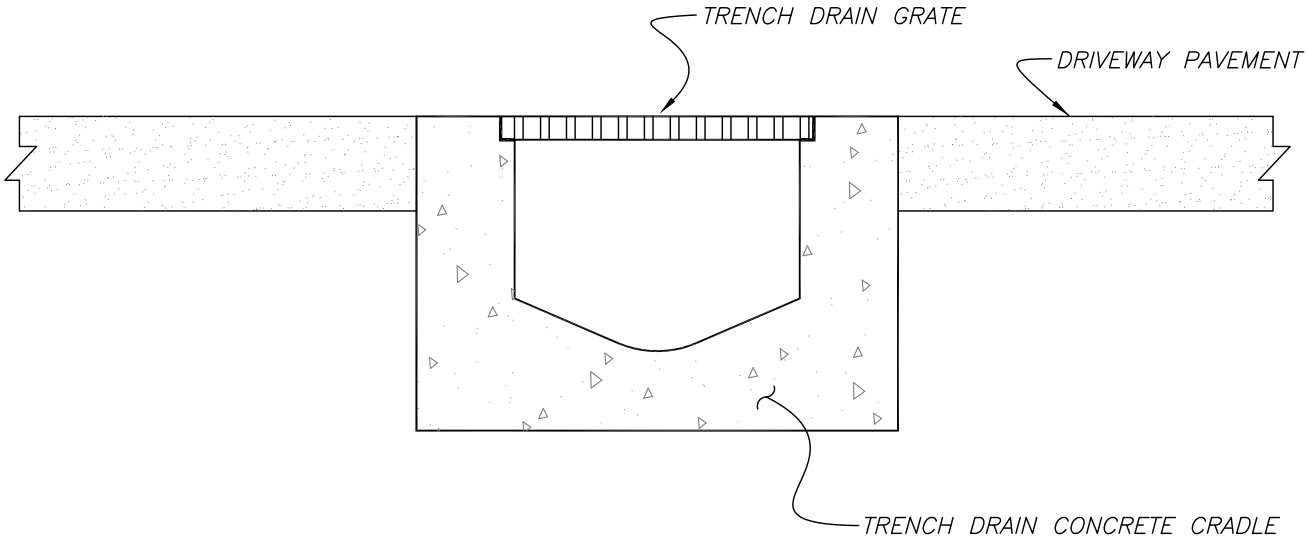

TYPICAL TRENCH DRAIN

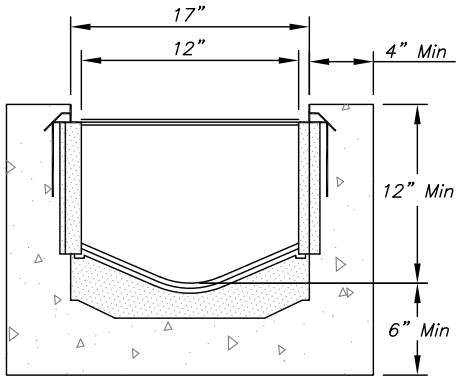

12" MIN THROAT EXAMPLE

Not to Scale

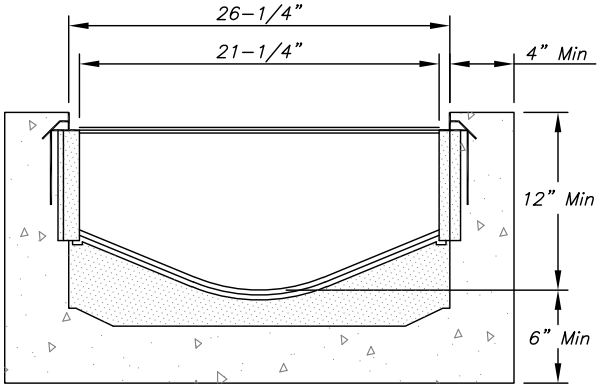

LARGER THROAT EXAMPLE

Not to Scale

TRENCH DRAIN SUBSTITUTION FOR CULVERT IN LOW-COVER CONDITIONS

Use Cross-Sectional Area Chart to convert from pipe size
Swaled driveways are not permitted – use trench drains

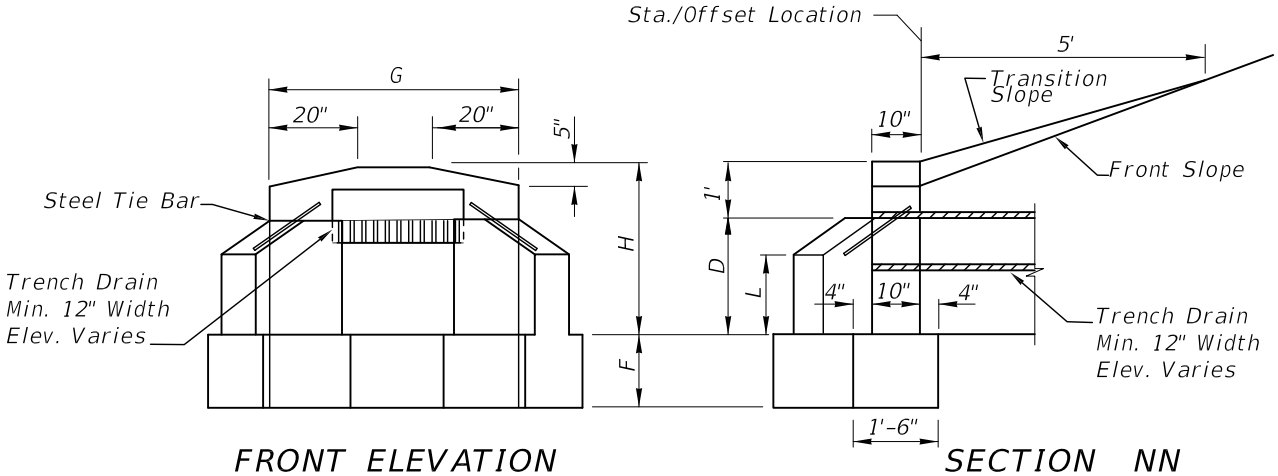

FRONT ELEVATION

SECTION NN

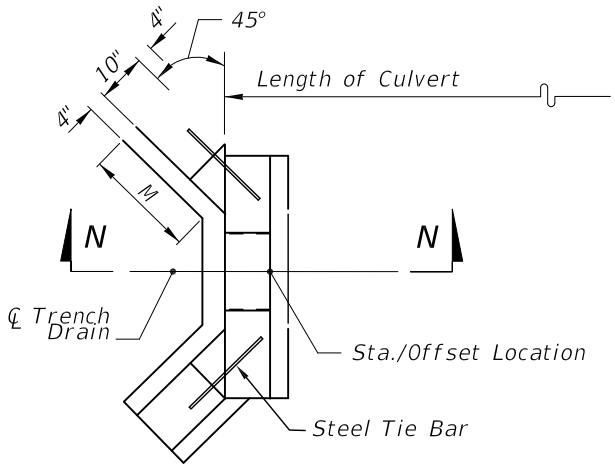

PLAN

CONCRETE ENDWALL WITH 45° WINGS FOR TRENCH DRAINS

GENERAL NOTES

1. Winged concrete endwalls are intended for use outside the clear zone.
2. Chamfer all exposed edges ¾".
3. Concrete shall be Class I, except ASTM C478 (4000 psi) Concrete may be substituted for precast items manufactured in plants meeting the requirements of Section 449 of the Specifications.
4. Endwall to be paid for under the contract unit price for Class I Concrete.
5. Sodding to be in accordance with Index No. 281, and paid for under the contract unit price for Performance Turf, SY.

FDOT Headwall
Index 266 Modified

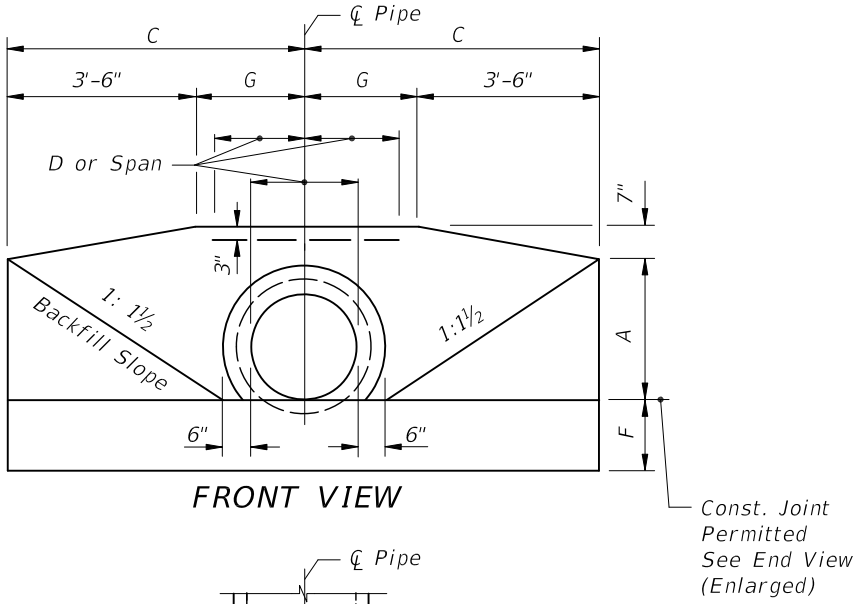

FRONT VIEW

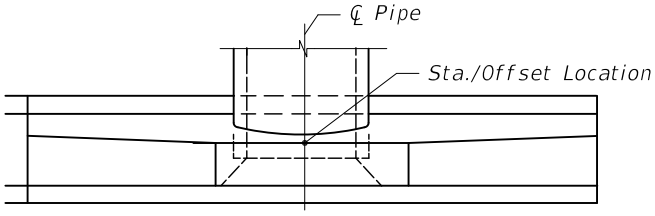

TOP VIEW

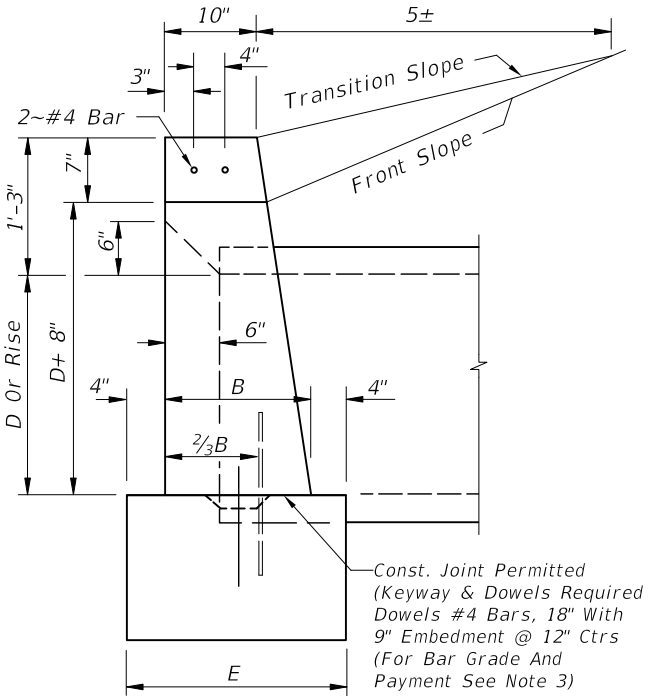

END VIEW (ENLARGED)

ENDWALL DIMENSIONS
(EXCLUSIVE OF MULTIPLE PIPE SPACING)

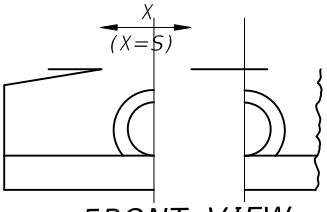

FRONT VIEW

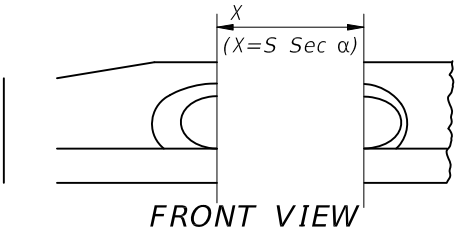

FRONT VIEW

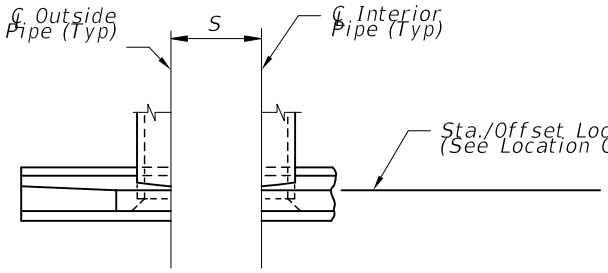

TOP VIEW

NORMAL PIPE

LEGEND

α Pipe Skew
S Center To Center Pipe Spacing
X Centerline To Centerline
Dimension At Face Of Headwall

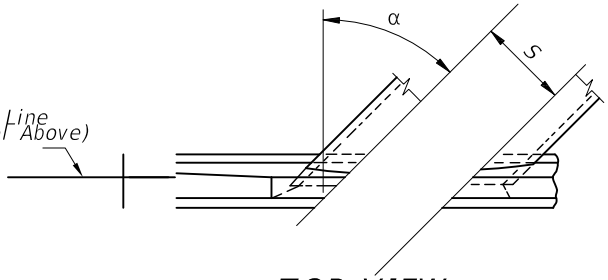

TOP VIEW

SKEWED PIPE

PIPE AND SPACING FOR MULTIPLE PIPE
ENDWALL POSITIONS FOR SINGLE AND MULTIPLE

For additional information refer to

FDOT Headwall
Index 250

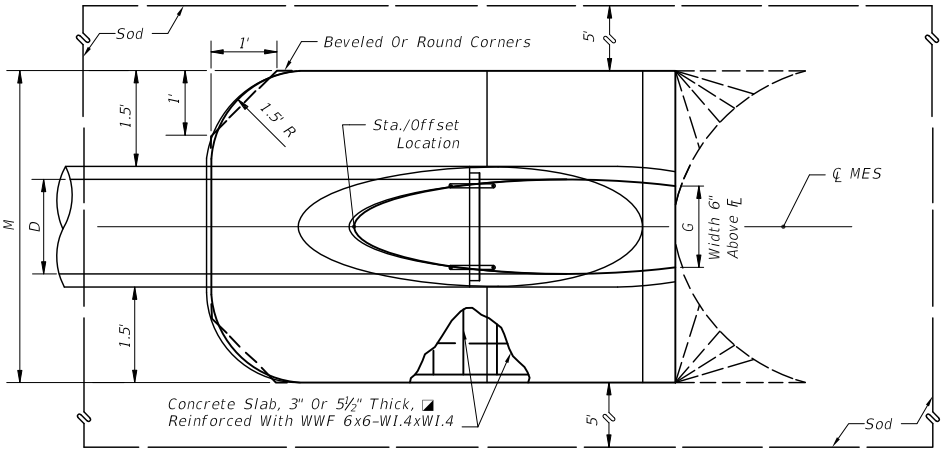

TOP-VIEW SINGLE PIPE

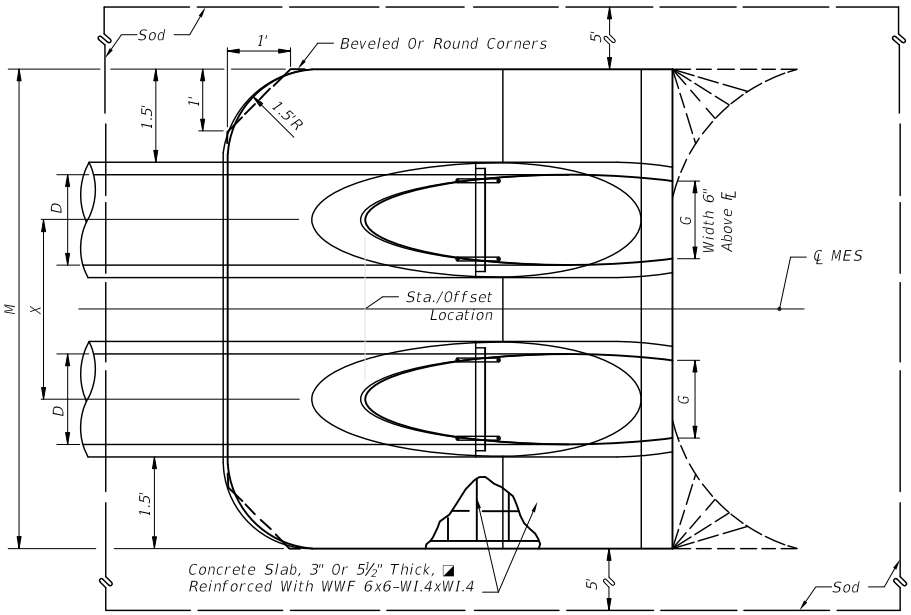

TOP-VIEW MULTIPLE PIPE

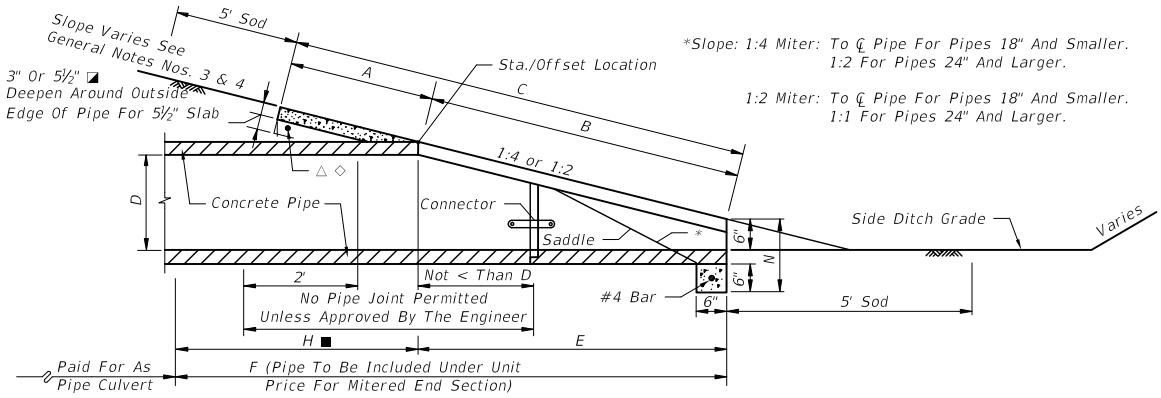

SECTION

NOTE: See sheet 6 for details and notes.

For additional information refer to

FDOT Headwall Index 272

SINGLE AND MULTIPLE ROUND CONCRETE PIPE

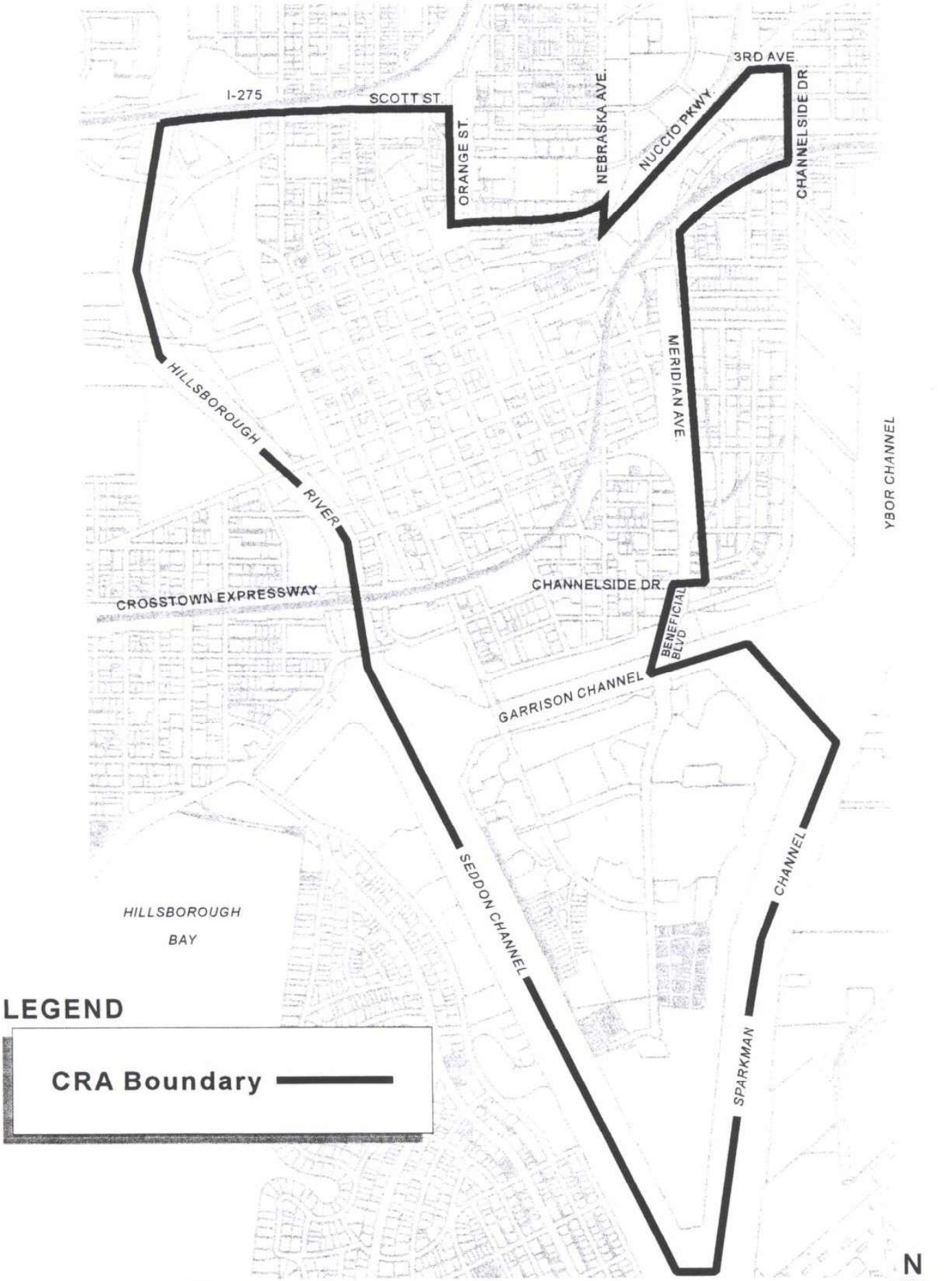

Downtown Tampa

Community Redevelopment Area

Ybor City Community Redevelopment Area

REQUIRED DITCH INFORMATION FOR CULVERT INSTALLATION
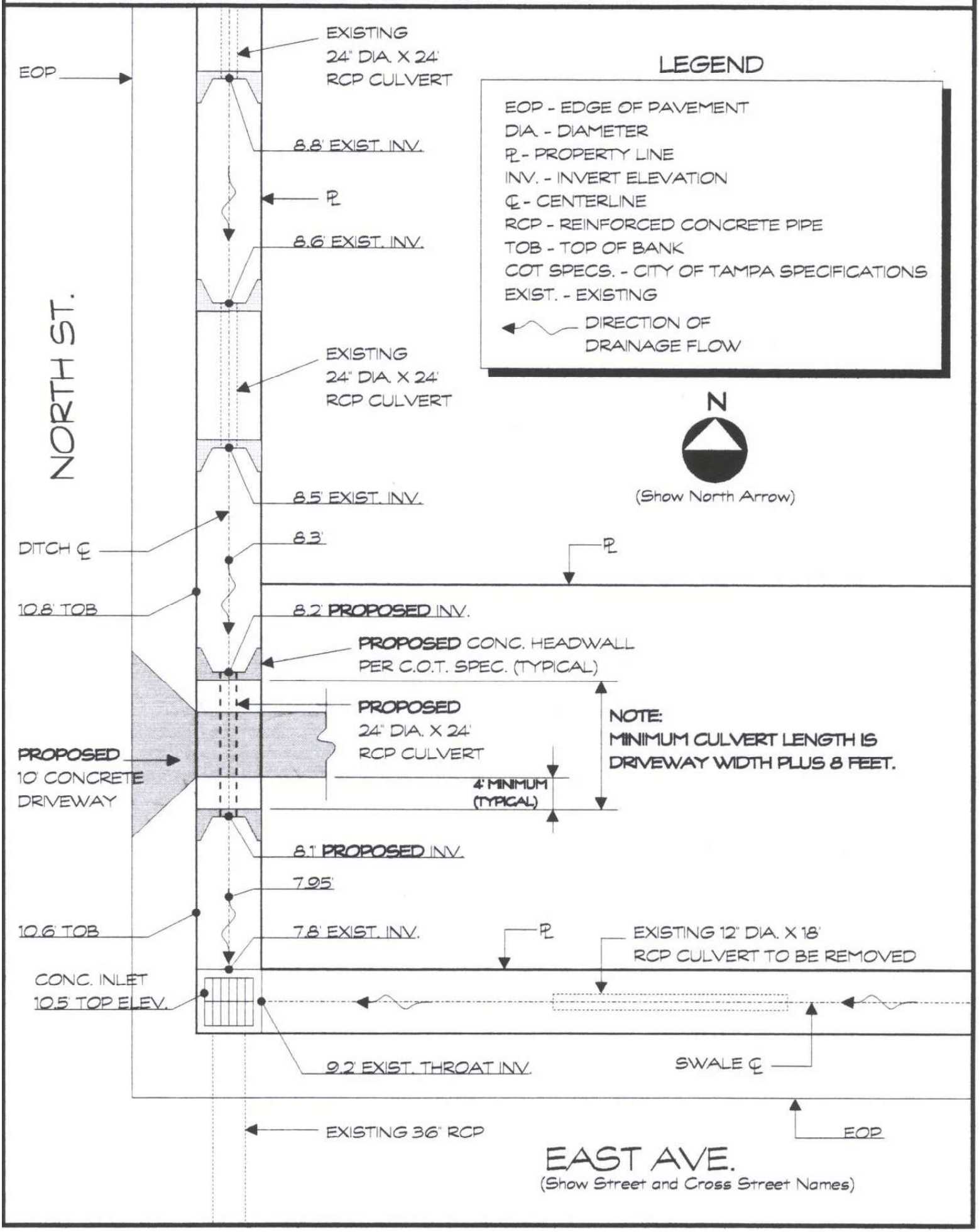
EXAMPLE