TAMPA WATER DEPARTMENT TECHNICAL MANUAL

May 2002

Prepared by:

Tampa Water Department
Engineering Division

TABLE OF CONTENTS

TECHNICAL SPECIFICATIONS

LIST OF APPENDICES

APPENDIX A - MATERIAL SPECIFICATIONS
APPENDIX B - STANDARD DETAILS
APPENDIX C – SAMPLE DEP PERMIT APPLICATION FORMS

TECHNICAL SPECIFICATIONS

TECHNICAL SPECIFICATIONS

TABLE OF CONTENTS

SECTION 1 - DEPARTMENT PROCEDURES TS-1
- 1.1 GENERAL TS-1
- 1.2 APPLICATION AND COMMITMENT TS-1
- 1.3 CONSTRUCTION PLAN REVIEW AND APPROVAL TS-1
- 1.4 MATERIALS SUBMITTALS TS-2
- 1.5 CONSTRUCTION TS-3
- 1.6 PERMITTING TS-3

SECTION 2 - DRAFTING STANDARDS TS-3
- 2.1 GENERAL TS-3
- 2.2 DRAWING SIZES TS-4
- 2.3 SCALES TS-4
- 2.4 PLAN AND PROFILE VIEWS TS-4

SECTION 3 - DESIGN STANDARDS TS-4
- 3.1 GENERAL TS-4
- 3.2 PIPE TS-5
  - A. SIZING TS-5
  - B. LOCATION TS-6
    - 1) Horizontal TS-6
    - 2) Vertical TS-6
    - 3) Clearances and Separations TS-6
- 3.3 VALVES TS-8
- 3.4 FIRE HYDRANTS TS-8
  - A. FIRE PROTECTION TS-8
  - B. WATER QUALITY TS-9
- 3.5 METERS & SERVICES TS-9
  - A. METER LOCATION TS-9
  - B. SERVICE LINE SIZING TS-9
- 3.6 CONSTRUCTION DRAWING CHECKLIST TS-10
  - A. GENERAL REQUIREMENTS TS-10
  - B. PIPELINE TS-11
  - C. VALVES - FITTINGS - TAPS TS-12
  - D. HYDRANTS AND SERVICES TS-13

SECTION 4 - CONSTRUCTION STANDARDS TS-13
- 4.1 SITE PREPARATION TS-13
  - A. GENERAL TS-13
  - B. TREES TS-13

4.2 DEWATERING TS-14
4.3 TRENCHING, BACKFILLING AND COMPACTING TS-14
A. IMPERVIOUS SURFACE AREAS TS-16
B. PERVIOUS SURFACE AREAS TS-16
4.4 PIPELINE INSTALLATION TS-16
A. GENERAL TS-16
B. USE OF PVC PIPE WATER FOR MAINS TS-17
C. UNDERGROUND PIPELINES TS-19
1) Thrust Restraint TS-21
2) Precast Thrust Blocks TS-21
3) Joints TS-21
4) Plugs and Caps TS-22
5) Polyethylene Encasement TS-23
6) Pipe Identification TS-23
7) Completion TS-23
D. ABOVE GROUND AND EXPOSED PIPING TS-23
4.5 CASING INSTALLATION TS-24
4.6 FITTINGS TS-25
A. ANCHORAGE OF BENDS, TEES AND PLUGS TS-25
4.7 VALVES TS-26
4.8 TAPS TS-27
4.9 HYDRANTS TS-27
A. FIRE HYDRANT INSTALLATION TS-27
B. FIRE HYDRANT PROTECTION POSTS TS-29

SECTION 5 - REQUIREMENTS FOR ACCEPTANCE TS-29
5.1 GENERAL TS-29
5.2 TESTING TS-29
A. HYDROSTATIC TESTING TS-29
Pressure Testing and Leakage Testing TS-30
B. DISINFECTION TS-31
1) Tablet Method TS-31
2) Slug Method TS-32
3) Continuous Feed Method TS-33
C. TESTING TS-33
5.3 RESTORATION TS-34
A. WASTE MATERIAL DISPOSAL TS-34
B. REPAIR AND RESURFACING TS-34
C. PAVEMENT MARKING TS-35
D. STREET AND TRAFFIC SIGNS TS-36
E. SEEDING TS-36
F. SODDING TS-36
5.4 RECORD DRAWINGS TS-37
5.5 TRANSFER OF WATER FACILITY OWNERSHIP TS-38

CITY OF TAMPA
WATER DEPARTMENT
TECHNICAL MANUAL

SECTION 1 - DEPARTMENT PROCEDURES

1.1 GENERAL

This section lists chronologically the steps the City of Tampa Water Department ("Department") follows when reviewing a developer-installed project. A developer-installed project is defined as any project in which a private entity designs and constructs water facilities which will be owned, operated, and maintained by the Department. Since each project may have conditions that are project specific, there may be additional requirements not listed in this section.

1.2 APPLICATION AND COMMITMENT

Every Developer must submit a completed "Application for Commitment of Water Service" to the City of Tampa Department of Business and Community Services, where it will be reviewed for completeness.

For subdivision infrastructure, the applicant must complete the application form, provide an adequate site plan and submit a check in the amount of $70.00. If water distribution system calculations must be submitted, the applicant shall use the latest version of WaterCAD.

After the application is complete, and if water service is feasible, the Department will issue a commitment for water service. The water service commitment letter will indicate the conditions the Developer must meet for the City of Tampa to provide water service. Standard Department turn-around time for processing water service commitments is 10 working days, but can vary depending on project complexity, Department workload, and the completeness of application submittals.

Developer construction plans shall not be formally submitted for Department review until after the Developer completes those conditions delineated in the commitment letter (payment of fees, engineering calculations, etc.). Depending on Department workload, a courtesy review of the Construction plans for the project may be provided by the Engineering Design Section of the Water Department.

1.3 CONSTRUCTION PLAN REVIEW AND APPROVAL

Developer construction plans shall be submitted to the Engineering Design Section of the City of Tampa Water Department for review to ensure that the water facilities have been designed in accordance with current Department requirements, specifications, standards, and construction Standard Details.

If Developer submitted plans are not in accordance with current Department standards, the Engineering Design Section will indicate the required plan revisions through written comments and/or a completed Water Department Construction Checklist.

The Developer must make corrections or adjustments and submit corrected copies of the plans to the Water Department until all corrections or changes have been incorporated into the Construction plans to the satisfaction of the Engineering Section.

If the project is inside the City limits, after the Land Development Coordination Office determines that plans are in general conformance with City standards, the Developer will be notified in writing that the plans have been approved for construction. Subsequent to notice that plans are acceptable, the Developer will submit the following sets of plans to the Engineering Department to be stamped for construction "Plans Appear to be In General Conformance with Tampa Water Department Standards":

For the Tampa Water Department:

1 complete set of plans
3 partial sets of plans
1disc or CD-ROM containing the approved project in .dwf or .jpg format (read only), or approved equal.

For the Developer:

The number of copies required by the developer plus 1 extra complete set of plans for the jobsite. The Developer's water main Contractor shall build from a set of plans approved and stamped by the Water Department, and a complete set of stamped plans shall be kept on the construction site at all times.

Final Developer plans submitted for approval (reviewed and ready to be stamped approved for construction by the Department) must bear the signature, date and stamp with seal of the Florida Registered Professional Engineer responsible for the project. Signing and stamping may be limited to those sheets that are related to any water line construction, including any utility master site plan, individual plan and profile sheets, and any detail sheets.

This Construction Review will remain in force for a 6-month period following the date of approval. If construction of the water facilities has not begun within 6 months of the approval, the plans must be resubmitted to the Department for review of compliance with then current Department standards.

1.4 MATERIALS SUBMITTALS

The City of Tampa Water Department maintains a list of materials from various manufacturers for pipes, fittings, valves, hydrants and other pipe appurtenances requiring no submittals. These are materials with which the Water Department is most familiar. If materials to be used for water facility installation are not on the current materials list, the Developer must submit material certifications and shop-drawings to the City of Tampa Water Department, Construction Inspection Section, 2603 North Rome Avenue, Tampa, Florida 33607, attention Construction Engineer, for approval.

Materials requiring submittal for approval include, but are not necessarily limited to, the following:

1. Pipe

2. Fittings
3. Valves
4. Hydrants
5. Service Lines

Other materials may require submittal as determined by the Construction Engineer "Engineer".

1.5 CONSTRUCTION

Construction plans will be held by the Water Department's Construction Inspection Section until Developer notification is received that construction on the water facilities is to begin within 2 weeks.

1.6 PERMITTING

The Developer shall obtain all permits necessary to comply with all Federal, State and Local regulations. Copies of these permits shall be available to the Department's Construction Inspection Section prior to construction.

The Developer shall not start construction until all terms of permit comment periods have been met. The waiting periods associated with Florida Department of Environmental Protection (FDEP) "Notification for Use of the General Permit for the Construction of an Extension to a Public Drinking Water Distribution System" permit application and approval process may exceed 30 days.

After the water main has been constructed and tested, the Developer shall apply to FDEP for release of the newly constructed main into the water distribution system by submitting the "Certification of Construction Completion" and "Request for a Letter of Clearance to Place Public Drinking Water Facility into Service". Once the release is obtained and provided to the Construction Inspection Section, meters may be installed, if all other requirements have been met. The meters will remain locked until the Developer requests the Water Department's Cross Connection Control Section to perform an inspection of their backflow preventer and the backflow preventer installation is approved by that Section.

The aforementioned FDEP permit applications may be found in Appendix C.

SECTION 2 - DRAFTING STANDARDS

2.1 GENERAL

This section lists general drafting requirements for plans submitted to this Department for review and approval. Since each project may have conditions specific to that project which may affect construction complexity, there may be additional requirements not listed in this section.

All plans submitted to this Department for approval must bear the signature, date and stamped seal of the Florida Registered Professional Engineer responsible for the project.

2.2 DRAWING SIZES

All water main construction plans shall be on 24" x 36" sheets.

2.3 SCALES

For all construction plans, the horizontal scale shall be 1”=20’, or 30’, or 40’, or 50’ and the vertical scale shall be 1”=2’, or 3’, or 4’, or 5’.

A plan view of the site indicating locations of existing and proposed utilities, with property corners and the limits of the right-of-way labeled, shall be provided in a 1”=100’ scale. On large projects, 1”=200' scale will be allowed.

The cover sheet of the plans shall include a vicinity map clearly indicating the area of proposed construction.

2.4 PLAN AND PROFILE VIEWS

A. The profile view shall be shown directly below the plan view with cross sections shown where necessary.

B. Plan view details shall emphasize the correct location of existing and proposed utilities. Property corners and iron pins shall be shown to identify the limits of the right-of-way. Each “Water Construction” plan sheet shall have the nearest benchmark indicated by note or call out.

C. Profile views shall show all utilities crossing the proposed water main and all parallel utilities located within 10 feet of the proposed water main. Water main depth shall be shown in the profile views.

SECTION 3 - DESIGN STANDARDS

3.1 GENERAL

Section 3 highlights some of the design standards utilized by the Department. This section is not intended to be all encompassing but rather to serve as a guide to assist the Developer with the design of water facilities.

The Developer may be required to comply with additional design standards which are not listed herein.

3.2 PIPE

A. SIZING

In all cases, Department approval will be required for sizing of water mains to be installed by the Developer.

All water mains shall be designed such that the minimum system pressure under the conditions described below are maintained within the main:

1. Average Day Conditions:
   a. Transmission system mains (≥16 -inch) 60 psi
   b. Distribution system mains (<16-inch)… 45 psi

2. Peak Hour Conditions:
   a. All transmission mains…… 50 psi
   b. All distribution system mains…… 40 psi
   c. All metered discharges…… 25 psi
   d. Pipeline velocities do not exceed 5 fps.
   e. All other system related velocities do not exceed 10 fps.

3. Fire Flow Conditions:

   a. All transmission system mains: Supply at least 4,000 gallons per minute (gpm) while maintaining a minimum of 35 psi residual within the main.

   b. All residential system mains: Supply at least 1,000 gpm, plus any domestic water requirement, while maintaining a minimum of 25-psi residual within the main.

   c. All commercial system mains: Supply at least 3,000 gpm, plus any domestic water requirements, while maintaining a minimum of 25-psi residual within the main.

   d. All system main evaluations will be performed using maximum day flows.

4. Dead-end Lines:

   Developer-installed water main dead-ends in cul-de-sacs may be installed with up to 400 feet of 4-inch ductile iron pipe, if a fire hydrant is installed before the reduction to 4-inch DIP and a blow-off is installed at the end of the 4-inch DIP, conditional upon the fire hydrant providing sufficient coverage as required in this document (i.e., fire hydrants shall be spaced no more than 450 feet apart, be no more than 450 feet from the rear of the farthest structure, and located at least 6 feet from the edge of pavement).

The maximum laying length for a 6-inch, dead-end main feeding a fire hydrant is 500 feet; maximum laying length for an 8-inch, dead-end main feeding a hydrant is 2,000 feet.

B. LOCATION

1. Horizontal

All water mains shall be installed no closer than 5 feet from the right-of-way line or in a location as directed by the Department.

2. Vertical

The minimum depth of cover for all water mains shall be based on the proposed pipe's diameter and the location of the pipe as follows:

LOCATION	PIPE DIA. (in.)	COVER (in.)
All, unless described below:	≤12	36
	≥16	48
State rights-of-way, or major County rights-of-way:		
	≥2	54

Or, at any other depth of cover as directed by the Department.

If conditions dictate that the main must be installed in a location where the depth of cover available is less than 30-inches, a concrete shock pad conforming to the Department Standard Detail "Reinforced Concrete Shock Pad" shall be installed unless otherwise directed by the Department.

3. Clearances And Separations

The provisions of Florida Administrative Code (F.A.C.) and these Specifications shall govern the design criteria when water mains are installed parallel or perpendicular to sanitary sewers, storm sewers, reclaimed water mains or gas lines.

Wall-to-wall pipe separation shall be minimum 12-inch vertical and 36-inch horizontal between water mains and all existing or proposed utilities, except storm sewers, sanitary sewers, gas lines, reclaimed water mains, and road underdrains, where the minimum wall-to-wall pipe separations shall be as follows:

MINIMUM WALL-TO-WALL PIPE SEPARATIONS

	VERTICAL (in.)	HORIZONTAL (in.)
Storm and sanitary sewers	18	120
Gas lines	18	120
Reclaimed water mains	18	36
Underdrains	18	48*

*distance from edge of granular filtration medium to main

and, as further specified below:

a. CROSSING Clearances With Other Utilities:

Sanitary sewers, storm sewers, reclaimed water lines, and gas mains shall cross under potable water mains, whenever possible.

One full length of water main pipe shall be centered at the crossing and its joints shall be leak-free.

The crossing shall be arranged so that the storm, sanitary sewer, reclaimed water, or gas main joints will be equidistant from and as far as possible from the water main joints.

When crossing a metal gas main with less than 10 feet separation, ductile iron water mains shall be polywrapped to a point 20 feet beyond the crossing, in both directions, per Department Standard Detail “Installation of Polyethylene Encasement”.

b. PARALLEL Clearances With Other Utilities:

A minimum 10-foot horizontal separation shall be maintained between water mains in parallel installations with storm sewers, sanitary sewers, or gas mains.

In cases where 10-foot horizontal separation cannot be maintained, the following criteria may be applied by the Department:

i. The water main may be laid in a separate trench or on an undisturbed earth shelf located on one side of the storm or sanitary sewer at an elevation such that the bottom of the water main is at least 18 inches above the top of the storm or sanitary sewer (in profile view). Minimum horizontal-pipe wall-to-wall clearance of 36 inches shall be maintained.

ii. The water main should always be above the storm sewer or sanitary sewer (as viewed in profile) and the joints staggered so as to be located as far as possible from the joints on the gravity

or force main.

iii. If the water main must be below the storm sewer or sanitary sewer, the minimum 18-inch vertical clearance shall be maintained from the bottom of the storm or sanitary sewer to the top of the water main (as viewed in profile), and a minimum 36-inch wall-to-wall pipe clearance maintained (as viewed in plan view).

iv. If the water main must be installed in parallel with a metal gas main with less than 10-feet horizontal separation (pipe-wall to pipe-wall), the ductile iron water main shall be polywrapped for any length wherein the 10-feet separation requirement is not met and for a minimum of 20 feet beyond the limits of non-compliance.

When crossing or parallel to storm sewer and sanitary sewer mains, including gravity sewers and force mains, with less than the minimum clearances, the Developer shall protect the water main as shown on the plans or in a manner acceptable to the Department.

The Department must specifically approve any variance from the above specified clearance and separation requirements.

3.3 VALVES

Valves shall be installed at intervals not to exceed 2,000 feet for transmission mains, 1,000 feet in residential areas, and 500 feet in industrial and commercial areas. There shall be a sufficient number of valves so that single lines in the network may be isolated from the remainder of the system. If construction is to be phased, a valve followed by one full length of pipe and a plug, cap or blow-off assembly must be installed at the end of each line that is to be continued.

Distribution main valves shall be installed in two directions by a tee and in three directions by a cross. A valve shall be located on each side of a jack-and-bore crossing.

Valves shall be installed as to line up with projected right-of-way lines, if practical.

3.4 FIRE HYDRANTS

A. FIRE PROTECTION

Fire hydrants shall be no more than 450 feet apart when measured along streets or acceptable access ways. For dead-end cul-de-sacs, fire hydrants shall be placed no more than 450 feet from the rear of the farthest structure.

Fire hydrants shall be located at least 6 feet from the edge of pavement. At locations where this distance cannot be maintained, bollards may be required around the hydrant,

as directed by the Department. A blue road reflector shall be placed in the center of the traveled lane nearest each fire hydrant.

B. WATER QUALITY

Blow-off assemblies or fire hydrants shall be installed at the dead-end of all non-circulating mains or at locations directed by the Department. All blow-off assemblies shall be installed in standard valve boxes set to finished grade. In order to protect it from vehicular traffic, the top of the blow-off assembly shall be set to an elevation 6-inches below finished grade, inside the valve box.

3.5 METERS & SERVICES

A. METER LOCATION

Meter locations will be determined by the Department. For single family residences, the meter shall be installed within 2 feet of the side property line or as directed by the Department. For multiple residential units and lawn irrigation systems, the meter shall be installed where it can be best maintained and serviced. Meter boxes shall be furnished by the City of Tampa Water Department and installed by the Developer (Developer to arrange with the Department's Construction Engineer for pick-up of meter boxes from the Water Department Distribution Yard). Individual water meters shall be installed in the meter boxes, by the Water Department, subsequent to water main passing acceptance tests.

B. SERVICE LINE SIZING

Water service line sizes shall be provided as described in the following table:

METER SIZE (inches)	SERVICE LINE SIZE (inches)		
	0-15 ft.*	15>80 ft.	80>150 ft.
¾	1	1	2
¾- Dual Service	2	2	2
1	1	2	2
1- Dual Service	N/A	2	4" DIP
1-½	2	2	2
2	2	4" DIP	4" DIP

* distances refer to feet from main to meter

All water meter service lines shall be made of High Density Polyethylene, except 4-inch service lines which shall be ductile iron pipe. All long-side services shall be placed in a steel or PVC sleeve (see Department Standard Details for sleeve sizes required long-side meter services).

3.6 CONSTRUCTION DRAWING CHECKLIST

Sections A-D below is the “Construction Drawing Checklist” used by the Department as a basis for reviewing Developer prepared construction plans for Developer installed water facilities. This checklist is not intended to be all inclusive of the Water Department standards and requirements for Developer installation of water facilities, but to serve as a foundation for the review of plans for the proposed installation. The Developer is responsible for all specifications and requirements as described in this Technical Manual, or as directed by the Department. This checklist can serve as a final check by the Developer on construction plans submitted for Department review, prior to submission to the Water Department for the required plan review.

A. GENERAL REQUIREMENTS

1. Is stationing correct?
2. Is a location map shown? Is the proper location identified as "Project Location"?
3. Are match lines required? Are they identified and stationed properly?
4. Are widths of pavement, curbs, driveways, and sidewalks shown?
5. Are survey markers and benchmarks shown and identified?
6. Are widths of all rights-of-way shown on all streets?
7. Is there a profile shown directly below the plan view and are cross sections shown where necessary?
8. Are proposed grade and existing grade shown over the proposed water main?
9. Are all existing and proposed utilities shown and located?
10. Are all trees within 10 feet of the water main shown and is clearance between trees and water main adequate?
11. Have the plans been signed and sealed by the Registered Professional Engineer responsible for this project?
12. Are all street names properly shown and clearly labeled?
13. Is the north arrow shown on all sheets properly?
14. Is proper drawing scale shown, and are plans drawn to scale?
15. Are all items shown in plan view in agreement with the symbols/cover sheet legend?
16. If an easement is required, is it properly shown?

17. Are all necessary Department Standard Details included in the plan "Detail Sheets"?

18. Are there any additional or special notes to be added to the plans that are stated on the Checklist "Comments Sheet"?

19. Is a "Revisions" box included on each sheet of the plans and is it accordingly marked and dated when revisions are made to the plans? Does the "revisions" box include date, revision description, and the initials of person who revised the plans?

B. PIPELINE

1. Does the water main have sufficient clearance from other utilities?

2. Are crossing utilities shown in profile and/or cross sections?

3. Are invert and/or top elevations of all intersecting utilities on the profile view specified?

4. Is pipe cover specified on the profile?

5. Whenever the water line route crosses existing pavement, is the method of crossing shown on the plans and specified, i.e., jack and bore, open cut?

6. Do jack and bore casings extend to at least 8 feet beyond the edge of pavement in F.D.O.T. or Hillsborough County rights-of-way?

7. If a jack-and-bore is planned, is a cross-sectional detail of the jacking included? Is the casing pipe diameter, class, and thickness specified in the details and in the profile views?

8. For ductile iron pipe, is the maximum allowable deflection in degrees per joint noted on plans, and are station and offset of the BEGINNING and ENDING of deflections called out?

9. If PVC pipe is used for water mains, is the maximum allowable longitudinal bending radius noted on the plans and the "Maximum Allowable Bending Radius" Table included on each Water Facilities plan sheet? Are the station and offset of the BEGINNING and ENDING of the allowed PVC pipe bending labeled and stationed?

10. If PVC pipe is used for water mains, do the plan General or Construction Notes contain all Department specifications for PVC pipe installation? Are all Department PVC pipe Standard Detail Sheets included in the plan's Detail Sheets?

11. Are required areas of polywrap noted, i.e. gas line crossing, corrosive soils, tapping sleeves?

12. Are the size and type of pipe shown for all existing and proposed water mains?

13. Are size and type of pipe consistent with Department requirements?

14. Are all necessary pipes shown?

15. Is ductile iron pipe (only) used under collector or arterial roads?

16. Is the appropriate “Restraint Length” table included in the plan Detail Sheets?

17. Are all trees and roots within the limits of the water pipeline trench designated for removal and disposal? Are proposed tree plantings at least 10 feet from the water main?

18. Is the appropriate separation shown between metal gas lines and water mains?

19. Are sample taps shown on all mainlines, spaced at distances not exceeding 1,200 feet, at the end of all dead-end lines, and at the end of all branch runs. Are chlorine injection points labeled?

C. VALVES - FITTINGS - TAPS

1. Are all valves, fittings and bends shown, labeled, and stationed on the plan for horizontal bends or profile for vertical bends?

2. Are the proper number, location, and type of valves provided?

3. Are valve boxes called out?

4. Are bends and offsets minimized?

5. Are restrained joint lengths and locations properly calculated and then labeled in the profile view, i.e., from beginning Station to ending Station “Restrain All Joints”?

6. Are hot taps of existing water mains noted as being performed only by "City of Tampa Water Department Personnel or Water Department Approved Contractor"? Is the hot tap properly labeled with Developer responsibilities (as defined in this manual) and Department contact numbers to perform the tap?

D. HYDRANTS AND SERVICES

1. Are hydrant assemblies properly drawn (including gate valve and a call out for the valve box) and proper installation methods called out?

2. Are fire hydrants provided at not more than 450 feet spacing to meet Department requirements?

3. In cul-de-sacs and for dead-ends lines, is the maximum distance from the last hydrant to the back of the farthest structure 450 feet or less?

4. Are fire hydrants set at proper elevation and distance from curb?

5. Are all proposed services shown which run under pavement and is sizing consistent with Department requirements?

6. Are PVC sleeves or steel casings shown to be used with long-side meter services?

SECTION 4 - CONSTRUCTION STANDARDS

4.1 SITE PREPARATION

A. GENERAL

The construction site shall be cleared of all obstructions, stumps, roots and vegetation within the limits required for proper execution of the work in accordance with Section 110, F.D.O.T. “Standard Specifications for Road and Bridge Construction”, latest edition, to a depth of 12 inches.

B. TREES

Tree removal shall comply with the City of Tampa Tree Ordinance or ordinances, rules, or regulations of any other governmental agencies having jurisdiction. Within the limits of the water pipeline trench, all trees and roots which have been designated for removal, shall be labeled on the plans for removal and disposal by the Developer so as to allow for installation of the pipeline without hindrance.

All trees to be removed from City rights-of-way shall require a tree removal permit issued by the Parks Department. All trees to be removed from County rights-of-way shall require a tree removal permit issued by the County.

No trees shall be planted within 10 feet of the water main.

4.2 DEWATERING

Subsurface water shall be kept 2 feet or more below the working area until there is no danger of displacement of pipes or structures. All water collected and pumped shall be disposed of in a manner which will cause no health hazard, flooding or nuisance to the surrounding area and

in a manner so as not to degrade the water quality of surrounding water or violate any environmental ordinances or requirements. Water containing debris, sand or heavy sediment shall not be discharged into the storm water system. All permits for the discharge of this water shall be obtained by the Developer from the appropriate regulatory agency. All dewatering discharging into surface waters of the state, as defined in Chapter 62-620 F.A.C., shall be tested and discharged in compliance with the "Generic Permit for the Discharge of Produced Ground Water from any Non-Contaminated Site Activity". Results of pre-dewatering testing shall be maintained on the job site.

4.3 TRENCHING, BACKFILLING AND COMPACTING

Trenching shall be conducted to the limits and grades shown on the plans or as directed by the Department.

The Developer performing trench excavation shall comply with the Occupational Safety and Health Administration's (OSHA) trench excavation safety standards, including all subsequent revisions or updates to these standards as adopted by the Department of Labor and Employment Security (DLES).

The Developer shall consider all available geotechnical information in his design of the trench excavation safety system.

Dewatering operations shall be maintained until pipe placement is complete and the trench back-filled sufficiently to prevent movement or flotation of the pipe, including passing density tests if required.

The use of trench-digging machinery will be permitted except in places where its operation will cause damage to other utilities, trees, buildings, or existing structures above or below ground, in which case hand methods will be employed.

The trench width and trenching method may vary with and depend upon the depth of the trench and the nature of the excavated material encountered, but in any case shall be of ample width to permit the pipe to be laid and jointed and the backfill properly placed and compacted. The minimum width of unsheeted trench, at the bottom where the pipe is to be laid, shall be two foot greater than the nominal diameter of the pipe, except by consent of the Department. The maximum clear width of trench and the trench support system shall be in accordance with OSHA requirements.

Where sheeting and bracing are used in a trench, the trench width shall be adjusted accordingly. Trench sheeting shall be cut off at a minimum of 1 foot above the top of the installed pipe and left in place. Alternatively, the sheeting may be left in place until the pipe has been laid, tested for defects, repaired if necessary, and the soil around the pipe compacted to a depth of 2 feet over the top of pipe, at which time sheeting may be removed.

The trench shall be AWWA C-600 Type 2 as shown on the appropriate Department Standard Details "Typical Trenching, Bedding and Backfill Detail for Paved Areas" and "Typical Trenching, Bedding and Backfill Detail for Non-Paved Areas", unless otherwise specified. The trench shall have a flat bottom conforming to the depth to which the pipe is to be laid. The pipe

shall be laid upon sound soil, cut true and even, so that the barrel of the pipe will have equal bearing for its full length. Bell depressions of ample dimensions shall be dug at each joint to permit proper pipe jointing.

In the event the Developer excavates below the elevation required without approval from the Department, he shall refill the excavation with approved material and thoroughly consolidate. If, in the opinion of the Department, the trench bottom cannot support the pipe, a further depth and/or width shall be excavated and refilled to pipe foundation grade or other approved means shall be adopted to assure a firm foundation for the pipe.

All excavated material shall be piled in a manner that will not endanger the work and that will avoid obstructing sidewalks and driveways. Gutters shall be kept clear or other satisfactory provisions made for street drainage. All material removed from the trench on an improved area shall be removed from the site by the Developer.

Material removed from an unimproved area may be reused if, in the opinion of the Department, it is suitable and if local conditions permit reuse. All materials suitable for reuse must be stored separate from the general excavated material. All backfill material must be approved by the Department prior to placement. If replacement backfill is required, the Developer must supply the material.

Backfilling and compaction shall be conducted in a manner as to prevent subsequent settlement and provide adequate support for the surface treatment, pavement, or structures to be placed thereon.

Backfill material shall be free from cinders, clay, ashes, refuse, organic matter, boulders, rocks or stones exceeding 2-inch diameter, or other material that in the opinion of the Department is unsuitable.

All trenches shall be backfilled and compacted by hand-tamping, from the bottom of the trench to the centerline of the pipe in lifts not to exceed 6 inches (compacted thickness). Backfill material shall be deposited in the trench for the full width on each side of the pipe. From the centerline of the pipe to the specified grade, the pipe trench shall be backfilled and compacted by hand or by approved mechanical methods.

Soil consolidation through compaction shall be done in accordance with the requirements of the agency having jurisdiction. Unless requirements of the agency having jurisdiction are more stringent, all compaction shall conform to the following:

a. Impervious Surface Areas

The space between the pipe and the trench sides shall be packed full by hand shoveled earth, free from lumps, carefully deposited in layers, not exceeding 6 inches in depth. Such material shall be placed equally on each side of the pipe, and at the same time tamped in a manner acceptable to the Department, until enough fill has been so placed and compacted to provide a minimum cover of 12 inches above the pipe. All backfill

placed to this elevation shall be compacted to a density that is 98% or more of the maximum soil density as determined by the Modified Proctor density test (ASTM D-1557). From this point up to grade, the backfill shall be compacted in uniform layers not to exceed 12 inches depth to a minimum density that is 98% or more of the maximum modified proctor density.

b. Pervious Surface Areas

The space between the pipe and the trench sides shall be packed full by hand shoveled earth, free from lumps, carefully deposited in layers, not exceeding 6 inches in depth. Such material shall be placed equally on each side of the pipe, and at the same time tamped in a manner acceptable to the Department, until enough fill has been so placed and compacted to the centerline of the pipe. All backfill placed to this elevation shall be compacted to a density that is 95% or more of the maximum soil density as determined by the Modified Proctor density test (ASTM D-1557). From this point up to grade, the backfill shall be compacted in uniform layers not to exceed 12 inches depth to a minimum density that is 95% or more of the maximum modified proctor density.

4.4 PIPELINE INSTALLATION

A. GENERAL

During shipping, delivery and installation of water main pipe, HDPE tubing, and accessories, materials shall be handled in such a manner as to prevent any damage. Particular care shall be taken not to injure pipe coatings. All pipe, fittings, valves and other material shall be subject to inspection and acceptance by the Department after delivery and no broken, cracked, distorted, imperfectly coated, or otherwise damaged or unsatisfactory material shall be used. When a defect is discovered, the damaged portion shall not be installed. With the Department's approval, cracked DIP shall have the defect cut off at least 12 inches from the break in the sound section of the barrel.

Installation shall be accordance with manufacturer's recommendations and the appropriate AWWA Standards (C-600 for DIP and C-605 for PVCP) and as described in these technical specifications.

All connections to existing piping systems shall be made as shown or indicated on the plans after consultation and cooperation with the Department. No such connection shall be made until all requirements of these specifications as to tests, cleaning, flushing and disinfection of new work have been met, and the planned cut-in to the existing line has been approved by the Department. Where connections are made between new work and existing water mains, the connections shall be made in a thorough manner using proper fittings and specials. Some such connections shall be made during off-peak hours if required by the Department.

B. USE OF PVC PIPE FOR WATER MAINS

All Developer-installed distribution water mains shall be ductile iron pipe (DIP) unless

the Developer submits a written request for a variance from the Water Department Chief Design Engineer for the installation of PVC pipe (PVCP). Such authorization, if granted, shall be on a project by project basis only. If the Developer does not submit a written variance request for PVC pipe installation on a project, and if such authorization by the Chief Design Engineer is not given, ductile iron pipe shall be used for water main installations.

If a variance for PVC pipe installation is authorized, the installation shall conform to the following specifications and conditions:

1. All PVC pipe shall conform to the City of Tampa Water Department's Technical Specifications and Standard Details for PVC pipe materials, latest edition.

2. PVC pipe installation for water mains will only be authorized in residential rights-of-way.

3. Entrance of water main into Developer subdivision from a collector or arterial road shall not be made with PVC pipe. Entry into the subdivision/development from collector and arterial roads shall be with ductile iron pipe only; once the limits of the collector or arterial rights-of-way are cleared transition can then be made to PVC pipe.

4. PVC pipe color shall be blue.

5. PVC pipe is approved for four-, six-, and eight-inch diameter mains only.

6. Fittings made of PVC are not allowed; only ductile iron fittings shall be used for PVC pipe main installations.

7. Tapers on PVC pipe spigot ends shall be cut off flush before insertion into ductile iron fittings.

8. During installation, cleaning and lubrication of the bell and gasket of PVC pipe shall be as outlined in ANSI/AWWA C-605-94, Section 5.5 "Pipe Joining".

9. If Joint Deflection is included in the pipe design, it shall be limited to 80% of the manufacturer's installation recommendations for the specific PVC pipe being installed. Since joint deflection of PVC pipe is partially dependent on joint geometry, which is varied and proprietary to individual PVC pipe manufacturers, the degree of joint deflection allowed will vary depending upon the manufacturer of the pipe installed. If the pipe manufacturer is not specified at the time of design, no joint deflection will be permitted.

10. In lieu of joint deflections, changes in direction or alignment of PVC pipe line may be accomplished without the use of bends, elbows, or sweeps through controlled Longitudinal Bending of the PVC pipe (design procedure described in Uni-Bell PVC Pipe Association "Handbook of PVC Pipe, Design and

Construction"). Based on the mathematical relationships for longitudinal bending of pressurized tubes, Tables 8.2 and 8.3 in the Uni-Bell reference outline the maximum offset allowable at the free end of a PVC pipe which would not induce critical stresses or deflections in joints.

For PVC pipe installations within the City of Tampa Water Department Service Area, the free end offset allowed for a PVC pipe subjected to longitudinal bending shall be 80% or less of the maximum offset values listed in Table 8.2 and 8.3 (or as calculated from the applicable mathematical relationships). Pipe joints shall be blocked or braced to ensure that bending of PVC pressure pipe does not result in deflection in the gasketed or mechanical joints

11. PVC Joint Deflection and pipe Longitudinal Bending to accomplish change of direction or alignment of PVC pipe line shall not be used in tandem on the same piece of PVC pipe.

12. Ductile iron pipe restraint lengths illustrated in Tampa Water Department Standard Details "Restrained Joint Standard for Bends, Plugs, and Caps" and "Restrained Joint Standard for Tees and Reducers" shall be increased by twenty percent (20%) for PVC pipe.

13. Fire hydrant leads shall be of ductile iron pipe only. The weight of the hydrant tee shall not be carried by the PVC pipe; a concrete support cradle shall be installed under each hydrant tee on PVC pipe mains.

14. Ductile iron valve and/or fitting weights shall not be carried by PVC pipe. Valves installed in PVC pipe water main lines shall be seated and supported in accordance with Tampa Water Department Standard Detail "Valve Setting on Plastic Pipe Detail". Fittings shall similarly be supported.

15. Insulated copper tracer wire (solid 14-gauge, doubled to form a continuous loop) shall be installed in accordance with the Tampa Water Department Standard Detail on all non-metallic pipe main installations. The wires shall be attached to the PVC using minimum 2" wide duct tape, applied on each side of a joint and spaced every 4 to 5 feet. Locating wires shall terminate 4 or more inches above the concrete valve pad and fold back inside a 3" PVC access pipe (see Standard Detail "Double Copper Tracer Wire on PVC Pipe").

    Developer installed PVC pipe water distribution systems will not be accepted by the City of Tampa Water Department until continuity tests conducted at the final inspection by the Developer's contractor and witnessed by a Water Department inspector on the tracer wire substantiate continuity for the tracer wire loop.

16. All taps on PVC pipe mains for meter services shall be with a service saddle, manufactured specifically for PVC pipe, equal to or better than Ford FS- or FC-202, or JCM 406. Double-strap saddles designed for ductile iron or not formed to exact size for proper fit shall not be used. The cutting tool shall be a

shell type cutter (hole cutter) for PVC pipe with internal teeth or double slots and be designed to accommodate AWWA C-900 pipe; use of twist drill bits and auger bits shall not be prohibited. The saddles used should provide full support around the circumference of the pipe and provide a bearing area of sufficient width along the axis of the pipe (2" minimum), insuring that the pipe will not be distorted when the saddle is tightened.

17. Joint restraint shall be with mechanical device systems designed for mechanical- or push-on joint restraint of PVC pipes, such as the Megalug 2000PV or Uniflange 1300 for PVC to ductile iron mechanical-joints, and the Uniflange 1350 or Megalug 1600 for PVC push-on joints, or approved equals. Restraining devices shall meet or exceed all requirements of ASTM F1674 "Standard Test Method for Joint Restraint Products for Use with PVC Pipe". Thrust blocks will not be allowed for thrust restraint of PVC water mains; mechanical-device restraints shall be used for thrust restraint.

18. PVC pipe bedding and trench shall be in general conformance with Water Department Standard Detail "Pipe Bedding and Trench for Plastic Pipe".

C. UNDERGROUND PIPELINES

Proper implements, tools and facilities satisfactory to the Department shall be provided and used. Pipe, fittings, valves and appurtenances shall be carefully lowered into the trench piece by piece. Under no circumstances shall piping materials be dropped or dumped into the trench. Pipe and fittings shall be carefully examined for cracks and other defects while suspended above the trench immediately before installation in final position. If damage occurs to any pipe, fitting, valve or piping accessory in handling, the damage shall be immediately brought to the Engineer's attention. The Department shall be consulted to prescribe corrective repairs or rejection of the damaged items.

Lumps, blisters and excess coating shall be removed from the inside of the bell end and outside of the spigot end of each ductile iron pipe. The outside of the spigot and the inside of the bell shall be wire brushed and wiped clean, dry and free from oil and grease before the pipe is laid. Pipe joints shall be made up in accordance with manufacturer's recommendations.

Upon satisfactory excavation of the pipe trench and completion of the pipe bedding, a continuous trough for the pipe barrel and recesses for the pipe bells, or couplings, shall be excavated by hand digging. As the pipe is laid in the prepared trench, true to line and grade, the pipe barrel shall receive continuous, uniform support with no pressure exerted on the pipe joints from the trench bottom.

Pipe manufactured from materials that are classified as flexible for purpose of pipe design shall be bedded true to line and grade with uniform and continuous support from a firm base and installed in accordance with manufacturer's recommendations. Blocking shall not be used to bring the pipe to grade. Backfill material shall be properly placed and compacted to provide lateral restraint against deflection in the pipe diameter. Care shall be exercised to avoid contact between the pipe and compaction equipment.

The interior of the pipe shall be thoroughly cleaned of all foreign matter before being gently lowered into the trench and shall be kept clean during laying operations by means of plugs or other approved methods. Pipe 12-inches diameter and smaller may be cleaned by flushing in place under the supervision of the Department if in the Department's opinion the pipe contains dirt that can be so removed. In the Department's opinion, if the pipe contains dirt that cannot be removed by flushing, then the pipe shall be cleaned by swabbing and flushing before it is placed in the trench. Pipe greater than 12 inches in diameter shall be thoroughly cleaned, by appropriate means, before placing it in the trench.

During suspension of work for any reason at any time, including the end of each workday, a watertight plug shall be placed in the end of the pipe last laid to prevent mud or other foreign material from entering the pipe. Sufficient backfill material shall also be placed over the pipe to prevent flotation.

Lines shall be laid straight and depth of cover shall be maintained uniformly with respect to finished grade, whether grading is completed or proposed at time of pipe installation. Pipelines shown on the plans to be laid at grade or with a specified slope shall be installed with the top of pipe or invert conforming to the required elevations, slopes and alignment shown and with the pipe bottom uniformly and continuously supported by a firm bedding and foundation.

The work shall at all times progress with caution so as to prevent damage to underground obstructions, both known and unknown. If an obstruction is encountered which is not shown on the plans and realignment is necessary, the Department shall immediately be notified so that alterations to the plans can be made. The Developer shall notify the Department far enough in advance to allow realignment to be accomplished by deflection in the DIP pipe joints or longitudinal bending of PVC pipe.

Pipe shall be laid with bell ends facing upstream unless directed otherwise by the Department. Wherever it is necessary to deflect ductile iron pipe from a straight line, either in the vertical or horizontal plane, the amount of deflection allowed shall not exceed 80% of that allowed under AWWA Standard C-600 for the type of joint being installed. Deflection will be allowed only after the pipe has been properly homed.

Note: For PVC pipe installations, zero percent deflection at the joint is allowed by the Department, unless otherwise stipulated in the Department approved plans. Changes in direction or alignment of PVC pipeline should be accomplished through the use of controlled Longitudinal Bending, limited to 80% of the maximum offset values listed in the Uni-Bell PVC Pipe Association “Handbook of PVC Pipe, Design and Construction”.

(1) Thrust Restraint

All plugs, caps, tees, bends, hydrant assemblies and other fittings on water pressure pipelines shall be restrained for the required restraint lengths in accordance with the appropriate Restrained Length Table as provided in Water Department Standard Details “Restrained Joint Standard for Bends,

Plugs, and Caps" and "Restrained Joint Standard for Tees and Reducers".

(2) Precast Thrust Blocks

Thrust restraint shall be accomplished with manufactured mechanical restraint devices. If concrete thrust blocks are required during installation, precast concrete thrust blocks shall be manufactured to the dimensions shown in the Department Standard Detail "Precast Concrete Thrust Blocks". The concrete for thrust blocks shall consist of a uniform mix of Portland cement, sand and gravel. The mix shall be proportioned to provide a dense concrete with a minimum compressive strength of 3,000 psi in 28 days. All material used in mixing concrete shall meet Florida Department of Transportation specifications.

(3) Joints

The joints of all pipelines shall be made absolutely tight. The particular joint used shall be acceptable to the Department prior to installation. The gasket material for the joint shall be properly positioned before the pipe is lowered into the trench. The joining of the pipe shall proceed in accordance with the manufacturer's requirements.

(a) Push-on Joints

In making up the push-on type joint, the gasket shall be placed in the socket of the mating bell with the large round end entering first so that the groove fits over the bend in the seat. The spigot end of the pipe shall be cut and beveled as necessary and thoroughly brushed and cleaned with a wire brush. A thin film of manufacturer's-approved lubricant shall be applied to both surfaces (inside surface of bell and outside surface of spigot) to be mated and homed. The spigot end of the pipe shall be placed in alignment with the bell end of the pipe to which it is to be joined. The joint shall be made up by exerting sufficient force on the bell end (of the pipe to be homed) so that its spigot end is moved past the gasket until it seats, in accordance with manufacturer's recommendations. Backhoe buckets or excavation equipment shall not be applied directly to the pipe. Any deflections required shall be made after the pipe joint is assembled.

(b) Mechanical Joints

Where shown on the plans, or where in the opinion of the Department, settlement or vibration is likely to occur, all pipe joints of pressure pipelines shall be bolted mechanical type as specified herein.

Mechanical joints shall be made up using high-strength, low-alloy steel bolts and EPDM rubber gaskets having either plain or duck tip as recommended by the manufacturer. All types of mechanical joint pipes shall be laid and jointed in full conformance with the manufacturer's recommendations. Only especially skilled workmen shall be permitted to

make up mechanical joints.

Mechanical joints shall be centered in the bells. Soapy water or a manufacturer-approved pipe lubricant shall be brushed over the gasket just prior to installation. The gasket and gland shall be placed in position, the bolts inserted, and the nuts tightened finger-tight. Mechanical joints shall be assembled in accordance with AWWA Standards. The joint bolts shall be tightened on opposite sides of the pipes by means of a torque wrench in such a manner that the gland shall be brought up evenly into the joint. The following range of bolt torques shall be applied:

Bolt Size (inches)	Range of Torque
¾" diameter	85 to 95 ft.-lbs.
1" diameter	95 to 100 ft.-lbs.

If effective sealing is not obtained at a maximum torque listed above, the joint shall be disassembled and reassembled after thorough cleaning. If the joint is defective, it shall be cut out and entirely replaced or, if authorized by the Department, the defective joint may be repaired by a suitable clamp.

(4) Plugs and Caps

Plugs shall be inserted into the bells of all dead-ends of pipe, tees or crosses. Plain ends shall be capped. Mechanical restraints for and restraint lengths of plugged and capped water mains shall be in conformance with the appropriate Department Standard Details.

(5) Polyethylene Encasement

Polyethylene encasement conforming to the requirements of AWWA C-105 Method-A, 8-mil thick, shall be installed on all buried ductile iron pipe, fittings, valves, and appurtenances where shown on the drawings, as directed by the Department, or as dictated by field conditions. Polyethylene encasement shall be installed in accordance with Department Standard Detail "Installation of Polyethylene Encasement". Polyethylene encasement installation shall be required where soils or the soil environments are deemed to be corrosive, or at the direction of the Department.

(6) Pipe Identification

Each run of ductile-iron pipe potable water main shall be wrapped with a continuous length of tape, in accordance with Department Standard Detail "Pipe Identification". Tape for spiral wrapping shall be minimum 2"-wide blue vinyl tape, with a minimum of three spiral wraps per pipe section.

(7) Completion

After the pipe has been laid, inspected by the Department and found to be satisfactory, sufficient backfill shall be placed along the pipe barrel to hold the pipe securely in place while conducting the preliminary hydrostatic test. If a leak is detected during hydrostatic testing, backfill placed over joints will be removed and the pipe repaired in a manner acceptable to the Department.

Upon satisfactory completion of the preliminary hydrostatic test, backfilling shall be completed.

D. ABOVE GROUND AND EXPOSED PIPING

Above ground and exposed pipe, fittings, valves and accessories shall be installed as shown or indicated on the plans. Piping shall be cut accurately to measurements established at the job site and shall be worked into place without springing or forcing, properly clearing all equipment access areas and openings. Pipe connections shall be made in accordance with the details shown and manufacturer's recommendations. Open ends of pipes shall be properly capped or plugged during installation to keep dirt and other foreign material out of the system. Pipe supports and hangers shall be provided where indicated or as required to insure adequate support of the piping.

4.5 CASING INSTALLATION

Casing installation shall be performed by jacking-and-boring under highways and railroads where shown on the plans. The casing pipe size, thickness, length, location and detail shall be as indicated and specified in Department jacking-and-boring Standard Details, and as described below. The work shall be performed by a qualified contractor, experienced and regularly engaged in jack-and-bore installations. All necessary materials, equipment, labor and traffic protection devices shall be on the job site before starting the work.

The Developer shall strictly adhere to Florida Department of Transportation Utility Accommodation Guide, Hillsborough County Utility Accommodation Guide, CSX Transportation, Inc./Seaboard System Railroad Standard Specifications for Pipelines, AASHTO Standards, and requirements of any other agency, whether public or private, having jurisdiction over the highway/railroad concerned. Requirements may be established verbally from an on-site representative, may be in the form of a written notice or permit, or may be transmitted through the Department. No construction or mobilization shall commence until the necessary permits have been obtained, a copy of the permit is at the job site, and proper notice and approval for construction have been obtained from the Department.

Casing pipe shall be welded-steel pipe having minimum sizes and thickness as shown in the Standard Details contained within this document. The steel shall meet the requirements of ASTM A139, Grade B. The Developer may use a welded-steel casing pipe of a larger diameter than specified if approved by the Department.

Only new pipe shall be used and all surfaces shall be smooth and uniform without bulges, dents, or warping. Finished lengths of pipe shall have beveled cut ends to facilitate proper

welding of transverse joints. The casing may need bituminous coating if required by the agency having jurisdiction over the jacking-and-boring site. Prior to ordering equipment and materials for the jacking-and-boring operation, the Developer shall get approval of his jacking equipment from the Department.

Hydraulic jacks shall be used in the jacking operation and extreme care shall be taken to maintain exact line and grade. Excavation at the heading shall be advanced not more than one foot ahead of the casing pipe and may be done manually or with an auger. Reaction blocks shall be utilized and adequately designed to carry the thrust of the jacks to the soil without excessive soil deflection and in such a manner as to avoid any disturbance of adjacent structures or utilities. Adequate protection railings shall be provided at the top of the pit at all times.

The jacking pit shall be of adequate length to provide room for the jacking frame, the jacking head, the reaction blocks, the jacking auger rig, and the jacking pipe. The pit shall be sufficiently wide to allow ample working space on each side of the jacking frame. The depth of the pit shall be such that the invert of the pipe when placed on the guide frame will be at the elevation desired for the completed line. The pit shall be tightly sheeted where necessary and kept dry at all times. The jacking frame shall be designed so that it applies a uniform pressure over the entire pipe wall area of the pipe to be jacked.
Extreme care shall be taken to insure that the casing is installed to accurate line and grade; maximum acceptable error in any direction from the design grade and alignment shall be 1/8 - inch per foot or as directed by the Department.

Upon completion, the Developer shall obtain and furnish to the Department, a written release from the governing agency indicating satisfactory completion of the crossing.

4.6 FITTINGS

Fittings shall be handled with care to avoid damage. All fittings shall be loaded and unloaded by lifting, and under no circumstances shall fittings be dropped, skidded, or rolled. Fittings shall not be placed, under any circumstances, against pipe or other fittings in such a manner that damage could result. Slings, hooks, or tongs used for lifting shall be padded in such a manner as to prevent damage of exterior surface or interior lining of fittings. If any part of the coating or lining of a fitting is damaged by the Developer, the Developer shall repair or replace the fitting to the satisfaction of the Department, before installing. Fittings shall be stored at all times in a safe manner to prevent damage and to be kept free of dirt, mud, or other foreign matter. All fitting gaskets shall be stored and placed in a cool location, out of direct sunlight and out of contact with petroleum products. All gaskets shall be used on a first-in, first-out basis.

A. Anchorage of Bends, Tees, and Plugs

Adequate precautions shall be taken to prevent the separation of joints at bends, tees, and plugged ends.

Details of design, construction, applications, installations, and number of joints necessary for the restraint of a given thrust shall be as specified in these specifications or as indicated on the plans. Under no circumstances will gray iron pipe be used at

restrained joints; ductile iron pipe will be used unless otherwise specified by the Department.

Where reaction or thrust blocking is required/allowed, it shall be of concrete meeting the following design criteria:

Compressive Strength:	3,000 PSI
% Air Entrainment:	5.0%
Water/Cement Ratio:	0.45
Max. Aggregate Size:	½”
Slump Range:	3" - 4"

Blocking shall be placed between undisturbed earth and the fitting to be anchored where firm support can be obtained. The area of bearing on the pipe and on the ground in each instance shall be that shown on the plans, the Standard Detail or as directed by the Department. The fittings shall be polyethylene encased in a manner acceptable to the Department prior to blocking. The blocking shall, unless otherwise shown or directed, be placed so that the pipe and fitting joints will be accessible for repair. If the soil does not provide firm support, then suitable tie rods, bridles, clamps and accessories as specified by the pipe manufacturer to brace the fitting properly shall be provided.

Precast thrust blocks may be used in-lieu of poured-in-place blocks on 8-inch and smaller water mains only. Precast blocks must be manufactured in accordance with these Technical Specifications. Size and bearing area of blocks will be as determined by the Department. The Department has the authority to reject any damaged block or any block considered of questionable quality. Placement will be in accordance with standard procedures for restraining thrust. Earth behind such blocks will be either undisturbed or compacted to a minimum 95% of the modified proctor density (if in a pervious surface area) or 98% if in an impervious surface area.

Tie rods and pipe clamps when allowed by the Department must be of adequate strength to prevent movement or other suitable means may be used as allowed by the Department. Steel rods, clamps, and washers shall be rustproof treated with bituminous material and polyethylene encased.

4.7 VALVES

Valves shall be handled with care to avoid damage. All valves shall be loaded and unloaded by lifting, and under no circumstances shall valves be dropped, skidded, or rolled. Valves shall not be placed, under any circumstances, against pipe or other fittings in such a manner that damage could result. Slings, hooks, or tongs used for lifting shall be padded in such a manner as to prevent damage. If any part of a valve’s exterior coating or interior lining is damaged by the Developer during handling, the repair and replacement shall be made by the Developer at his expense in manner satisfactory to the Department before installing. Valves shall be stored at all times in a safe manner to prevent damage and kept free of dirt, mud, or other foreign matter. All valve gaskets shall be stored and placed in a cool location, out of direct sunlight and out of contact with petroleum products. All gaskets shall be used on a first-in, first-out basis.

Butterfly valves shall first be delivered to the City of Tampa Water Department Rome Avenue Yard, for servicing prior to being delivered to the construction site.

Gate valves and butterfly valves shall be set and joined to new pipe in a manner heretofore specified for the cleaning, placement, and joining of pipe.

Cast iron valve boxes shall be firmly supported**,** centered and plumb, over the operating nut of the valve**,** valve box cover flush with the surface of the finished pavement or at such other levels as may be directed. Valve boxes shall have 6-inch thick wire mesh reinforced concrete pads poured around the top section of the valve box when in grass, dirt, pavement, or when directed by the Department. In accordance with Department Standard Detail "Typical Gate Valve, Valve Box, and Pad Installation", the pad shall be 24-inches square and shall be centered on the valve box. All Department valve covers shall be painted safety blue as prescribed by the American Public Works Association (APWA) uniform color code for utility systems.

The valve and valve box shall be installed such that Department personnel can insert a valve key through the valve box and completely open and close the valve. This test will be accomplished before final acceptance of the valve and box into the water system.

4.8 TAPS

All material supplied will be disinfected in accordance with Department standards.

After the tapping sleeve and valve have been installed and before the tap is made, the sleeve will be tested to ensure a watertight joint. A test plug will be provided in the sleeve and after the sleeve has been installed, it will be filled with water and the pressure increased to between 150 psi and 190 psi. All leaking joints will be repaired to the satisfaction of the Department, at the Developer's expense. Taps of existing water mains will only be performed by City of Tampa Water Department forces, or a Department approved contractor. Due to workload constraints, taps by Water Department forces will not be scheduled on Mondays or Fridays.

All tapping sleeves shall be wrapped and sealed in an approved manner with polyethylene encasement material.

All taps for meter services on PVC mains shall require a service saddle, manufactured specifically for PVC pipe, equal to or better than Ford FS- or FC-202, or JCM 406. Developers shall not use double-strap saddles designed for ductile iron or not formed to exact size for proper fit. The cutting tool shall be a shell-type (hole) cutter for PVC pipe with internal teeth or double slots and be designed to accommodate AWWA C-900 pipe; use of twist drill bits and auger bits is prohibited. Saddles used must provide support around the full circumference of the pipe and provide bearing area of sufficient width along the axis of the pipe (2 inches minimum) to ensure that the pipe will not be distorted when the saddle is tightened.

4.9 HYDRANTS

A. FIRE HYDRANT INSTALLATION

Fire hydrants shall be handled so as to avoid any damage at all times. Hydrants shall be located in a manner to provide complete accessibility and in such a manner that the possibility of damage from vehicles or injury to pedestrians will be minimized. Fire hydrants in FDOT rights-of-way shall conform to FDOT clear zone requirements.

Unless otherwise directed, the setting of any hydrant shall be as described in these Technical Specifications and as illustrated in Department Standard Details, “Typical Fire Hydrant Installation” and “Fire Hydrant Leads Method of Installation”. All fire hydrants shall be thoroughly cleaned of dirt or foreign material before installation. All hydrants shall stand plumb and shall have their pumper nozzle perpendicular to the curb. The top of flange elevation shall be finish grade plus 4 inches. Standard depth of bury shall be 3 to 5 feet. Each hydrant shall be connected to the water main with a 6-inch DIP branch controlled by an independent 6-inch resilient seat gate valve. All fire hydrant assembly leads shall be DIP. This will also apply to projects using PVC pipe. All fire hydrants shall be painted with a high-grade enamel, Federal Safety Yellow (OSHA approved) above the ground line.

A blue, reflective pavement marker (RPM) with bi-directional faces shall be installed adjacent to each hydrant, in the center of that travel lane nearest the hydrant. The RPM and the adhesive used to anchor it to the road surface shall conform to all appropriate provisions of the Florida Department of Transportation **“**Standard Specifications for Road and Bridge Construction”.

Upon completion of installation and passing all required tests, the Developer shall flow test the hydrants in accordance with AWWA Manual M17 and the following procedure:

a. remove 2-½ inch nozzle cap from the nearest existing hydrant ("RP Hydrant") as directed by the Engineer;

b. flush RP Hydrant to eliminate sediment;

c. connect pressure gauge to 2-½ inch nozzle of RP Hydrant;

d. fully open RP Hydrant, slowly. Read and record static pressure;

e. remove 2-½ inch nozzle cap from new hydrant ("FL Hydrant");

f. flush FL Hydrant to eliminate sediment;

g. install pitot tube pressure gauge on the 2-½ inch nozzle of the FL Hydrant;

h. open FL Hydrant slowly until fully open, exhaust air from the pitot tube pressure gauge by the bleed valve, allow pressures to stabilize, read and record pitot tube pressure gauge reading;

i. read and record residual pressure from RP Hydrant pressure gauge;

j. convert pitot tube pressure gauge reading to flow (see table 6-1, AWWA Manual M17, third edition) and record;

k. close both hydrants slowly, remove gauges, and reinstall nozzle caps;

All hydrant test reports shall be submitted to the Department as part of the final acceptance.

All pitot tubes, pressure gauges and any other equipment necessary for completion of this test will be supplied by the Contractor or Engineer of record for the project.

Based on the flow test, and supplemental calculation of flow to determine bonnet color (FLOWcc), the new hydrant bonnet shall be painted by the Developer in accordance with the following OSHA approved color codes:

FLOW FROM 2-½ INCH NOZZLE (At 20 PSI Residual Pressure)	BONNET COLOR
>1500 GPM	OSHA Light Blue
1001-1500 GPM	OSHA Green
500 - 1000 GPM	OSHA Orange
< 500 GPM	OSHA Red

B. FIRE HYDRANT PROTECTION POSTS

Fire hydrant protection posts are required when the fire hydrant is less than 6 feet from the edge of pavement, or as directed by the Department reviewing Engineer. Protection posts shall be placed 3 feet from the center line of the hydrant facing the edge of pavement and 1-½ feet from the centerline of the hydrant facing oncoming traffic per Standard Detail 4.01,"Typical Fire Hydrant Installation". The number of posts required will depend upon the fire hydrant's exposure to traffic.

Fire hydrant protection posts shall be 6-inch diameter ductile iron pipes with smooth rounded tops. All posts shall be filled with concrete and set a minimum of 3-feet above and 2-feet below grade. Protection posts shall be painted with a high-grade enamel Federal Safety Yellow (OSHA approved).

SECTION 5 - REQUIREMENTS FOR ACCEPTANCE

5.1 GENERAL

All Developer-installed water facilities must be constructed in accordance with all applicable

Department Standards and Specifications, Standard Details, and City of Tampa Code requirements. A representative of the Department will inspect the construction to assure compliance.

5.2 TESTING

The Department will require the Developer's engineer to perform the required tests to assure that all pipe installed including service lines meets the Department's standards.

The required tests are as follows:

A. HYDROSTATIC TESTING

Pressure Testing and Leakage Testing

All newly laid water pipe, including fittings, valves and service lines shall be pressure tested in accordance with AWWA Standard C-600 for DIP or AWWA C-605 for PVC pipe.

The Developer shall furnish, install, and operate all necessary equipment and instrumentation (pressure gauges, volume gauges, hoses, pumps, test pipe, test fittings, etc.) required for flushing and testing of the piping systems, and all such equipment and devices and their installation shall be approved by the Engineer. Pressure gauges shall be marked in graduated increments that do not exceed 2 psi. Gauges used to measure the volume of water necessary to raise post-test line pressure back to the highest pressure achieved during the test duration will be marked in graduated increments which do not exceed 5 ounces.

If requested by the Department, the Developer shall furnish to the Department certified test data for any gauges or recorders used for testing purposes. For testing purposes, the Developer shall have access to water supplied by the Department. Testing shall be conducted in the presence of and to the satisfaction of the Department as a condition precedent to the approval and acceptance of the system. Not less than 3 days notice shall be given prior to start of such tests, and such testing shall not be scheduled until preliminary testing by the Developer has indicated that the test section is ready for testing. The schedule and procedures for testing shall be determined by the Developer and reviewed with the Department prior to testing.

The duration of each pressure test shall be at least 2 hours with a minimum test pressure in excess of 150 psi. At no time shall the test or line pressure exceed 190 psi. If required by the Department, pump test equipment will be equipped with pressure relief valves pre-set to 190 psi. Each valved section of pipe shall be slowly filled with water and a pump shall be connected to the low point of the section being tested.

Before conducting the test, the Developer shall backfill all pipe unless the Department directs certain joints or connections to be left uncovered.

Before application of the test pressure, all air shall be expelled from the pipe. To accomplish this, taps will be made, if necessary, at points of highest elevation and afterward tightly stopped with tapered brass plugs, all at the Developer's expense.

At the end of the 2-hour test period, the Developer shall be required to pump the lines back up to the highest pressure obtained during the duration of the test period.

Pressure tests shall be made between valves to demonstrate the ability of the valve to sustain pressure. All piping systems shall be tested in accordance with these test methods in addition to any other tests required by local plumbing codes or building authorities. At the option of the Department, flow meters and/or pressure gauges used on hydrostatic testing equipment with approved strip or round chart recorders shall be supplied by the Developer. Tests shall be made in sections not to exceed ½ mile.

Throughout the duration of the test, the Developer is required to maintain a minimum pressure in excess of 150 psi. The Developer is advised that, should the test pressure fall to or below 150 psi any time during the 2-hour test, the test will be considered invalid and a retest will be required. Therefore, it is advised that the Developer should pump water into the line as the test pressure approaches 150-psi.

The City may allow pressure testing of multiple sections during one continuous 2-hour test period as long as the Developer can justify that each valved section shall be tested to the satisfaction of the City.

The Developer is warned that pressure testing against existing valves is done at his own risk. Failure of these valves to hold test pressure shall not relieve the Developer of the pressure testing requirement.

All exposed pipe, fittings, valves and joints shall be carefully examined for leaks. Any cracked or defective pipe, fittings, valves or other appurtenances discovered as a consequence of the pressure test shall be removed and replaced with acceptable material. All leaking or defective joints shall be repaired, corrected, or replaced. After all necessary replacements and corrections have been made, the test shall be repeated to the satisfaction of the Department.

If the pipeline fails the pressure test twice, then the Developer shall be required to retest the pipeline and provide to the Department certification by a Professional Engineer registered in the State of Florida, that the pipeline has passed the test in accordance with these standards before the Department will witness another test.

B. DISINFECTION

The Developer shall sterilize the water mains in accordance with the applicable section of the latest AWWA Specification C-651, as summarized below. The Developer, if directed, shall use the method specified by the Engineer.

Methods of Chlorination:

(1) Tablet Method

The tablet method consists of placing calcium hypochlorite granules or tablets in the water main as it is being installed and then filling the main with potable water when the installation is complete. The tablet method should give an average chlorine dose of approximately 25 mg/L.

Granules: The granular method is to be used on all water main installations as a minimum; it should be sufficient by itself to sterilize continuous mains less than 2,500 feet in length and 8-inch and smaller diameters. Calcium hypochlorite granules shall be placed at the upstream end of the first section of pipe, at 500-foot intervals, and at the upstream end of each branch main. The quantity of granules to be placed at the beginning of each main and at each 500-foot interval shall be as shown in the table below:

Pipe Diameter	Calcium Hypochlorite Granules (oz.)
4"	1.7
6"	3.8
8"	6.7

Precautions shall be taken to assure that air pockets are eliminated. The chlorinated water shall be retained in the pipe for at least 24 hours prior to flushing for the bacteria tests.

Note: This procedure must not be used on solvent-welded plastic because of the danger of fire or explosion from the reaction of the joint compounds with the calcium hypochlorite.

Tablets: During construction, 5-g calcium hypochlorite tablets shall be placed in each section of pipe, and one tablet placed in each hydrant, hydrant branch, and other appurtenances. The quantity of tablets for 18- or 20-foot pipe sections shall be as shown in the table below:

Pipe Diameter	Number of 5-g Calcium Hypochlorite Tablets
4"	1
6"	1
8"	2

(2) Slug Method

The slug method shall be used in addition to the granular method for those cases where the granular method does not provide sufficient sterilization by itself and for 12 inch and larger mains, or as directed by the Department. The slug method consists of: a) Completely filling the main in order to remove air pockets, b) flushing the main with a velocity of not less than 2.5 feet per second (fps) in order to remove particles, c) at a point not more than 10 feet downstream of the water source flushing the new main,–chlorine is to be continuously injected for a sufficient period to develop a solid column or "slug" of chlorinated water, d) the slug of chlorinated water is to move through the main exposing all interior surfaces to a chlorine concentration of approximately 100 mg/L for at least a 3-hour period.

(3) Continuous Feed Method

The continuous feed method shall be used in addition to the tablet method for those cases where the tablet method does not provide sufficient disinfection by itself. The continuous feed method consists of a) completely filling the main to remove air pockets; b) flushing the main with a velocity not less than 2.5 fps; c) at a point not more than 10 feet downstream of the water source flushing the new main, chlorine is to be injected in the new main at a constant rate sufficient to establish a 25 mg/L chlorine concentration throughout the main; d) see table below for minimum amount of chlorine required for each 100 foot section of pipe of various diameters:

Pipe Diameter	100% Chlorine (lb)	1% Chlorine Solution (gal)
4"	0.013	0.16
6”	0.030	0.36
8”	0.054	0.65
10”	0.085	1.02
12”	0.120	1.44
16”	0.217	2.60

The chlorinated water shall be retained in the main for at least 24 hours and have a residual of not less than 10 mg/L free chlorine prior to flushing.

C. TESTING

Upon completion of the hydrostatic test and disinfection, the Developer shall contact the Department's Construction Inspection Section to request bacteriological testing. The Developer shall install sample taps (per Standard Details 2.17 or 2.18) on the new main and at the end of each new branch of the piping system. The Developer shall flush the chlorinated disinfection water from the piping system until a free chlorine residual of 1.0

to 1.5 mg/L is maintained.

Sampling procedure shall be shall be coordinated by the Developer's contractor a minimum of one week in advance of wanting the sample to be pulled. Due to varying workloads, sample collection will be scheduled as the schedule permits. All failed samples, or samples that are not ready at the time of collection, will be charged to the contractor at the current rate it costs the Department per sample.

Due to FDEP requirements, the Developer's contractor may be required to remobilize to the site thirty to forty-five days after the samples have been cleared to perform necessary meter transfers and/or cut-and-plugs.

Samples for bacterial analysis will be pulled 24 hours apart by the Water Department, and will be taken for analysis by the Department. The sampling process may only begin on Mondays or Wednesdays. Two consecutive approved samples, taken 24 hours apart, will be required.

If the first sample is taken on Monday, the second sample must be taken on Tuesday. If the first sample is taken on Wednesday, the second sample will be taken on Thursday. No samples will be taken on Friday and the sampling process will not begin on Tuesday or Thursday.

All drilling and tapping equipment shall be sterilized as directed by the Department.

After completing the testing and sterilizing, and regardless of ground conditions, all sample taps and corporation stops shall be removed from the water main and replaced with tapered brass plugs.

5.3 RESTORATION

A. WASTE MATERIAL DISPOSAL

The Developer shall remove and dispose of all debris and excess spoil resulting from clearing, demolition and excavation operations. Natural waterways or bodies of water shall not be used for disposal of debris.

All debris shall be disposed of at a site approved and permitted by the State for such disposal. Clean spoil may be disposed on private property only with written authorization of the property owner.

Burning of brush or debris may be permitted, if allowed by the City, subject to the Developer's securing permits and providing such fire watch and notification of local fire companies as may be required by local law or ordinance. Such permits, however, shall not relieve the Developer of his responsibilities or liabilities with regard to protecting public health or properties.

B. REPAIR AND RESURFACING

Where street paving, driveways, sidewalks, or curb and gutter is disturbed, restoration shall be made to a condition at least equal to the original. All materials used for restoration shall conform to standard requirements of that particular agency responsible for roadway maintenance where construction takes place. All restoration work shall also meet the requirements of both the permitting agency as well as the City. The Developer shall determine any requirements and procedures, other than those set forth herein, which may affect the type, quality and method of carrying out the restoration of the areas to be restored to the satisfaction of the Department.

Base material shall be of the type removed or of equal or greater structural strength as determined by the Engineer. Existing base material from the excavation shall not be reused as base material, but may be used as a stabilizer, or for trench backfill after removal of existing asphalt, unless it is determined by the Department to be unsuitable.

Edges of pavement shall be mechanically sawed to provide a neat, straight edge to the width shown on the construction plans, or greater if necessary, prior to replacement. Base material shall be placed to the depths required by permitting agency and thoroughly compacted to the density required by the Department or to the standard of the governing permitting agency.

The Developer shall pay careful attention to the proper reconstruction of the pavement adjacent to the gutters and at street intersections to obtain satisfactory drainage to inlets from the intersecting streets. Pavement replacement shall be with the same type of materials as removed and installation methods and procedures shall comply with the appropriate procedures established by the FDOT Standards Specifications**,** or the appropriate permitting agency.

In the absence of governing agency requirements, where asphaltic concrete overlays are performed, the overlays shall be 1-inch thick over the pipe trench area, or as directed by the Department, so as to provide a smooth transition between the existing pavement and the overlay pavement.

Permanent pavement replacement shall not commence until acceptable to the Department. Until such replacement is completed, the Developer shall maintain all trenches and disturbed areas, providing additional base materials as is necessary to maintain smooth transition of the areas by vehicular traffic and providing dust control as necessary.

C. PAVEMENT MARKING

Where shown or required for repaired/replaced pavement, pavement marking shall be painted with thermoplastic markings.

Thermoplastic compound sealing primer and glass spheres shall meet the requirements of FDOT Standard Specifications, Sections 711 and 971, or the requirements of the governing permitting agency.

Pavement marking of repairs/replacements shall match the previously existing

pavement where applicable. Where markings are required other than replacement of previously existing markings, the Developer shall follow the requirements of the U.S. Department of Transportation, "Manual of Uniform Traffic Control Devices for Streets and Highways". Application of thermoplastic markings shall comply with FDOT Standard Specifications, Section 711, or the requirements of the governing permitting agency. Blue reflective pavement markers shall be installed at fire hydrant locations per Section 4.8-A of this manual.

D. STREET AND TRAFFIC SIGNS

Removal and relocation of all street or traffic signs shall be approved through the appropriate permitting agency.

E. SEEDING

All areas designated by the Department to be seeded shall be seeded according to installation procedures and materials outlined herein.

Materials for topsoiling and seeding, including fertilization, shall comply with the applicable requirements of FDOT Standard Specifications, Sections 570 and 981, or the governing permitting agency. Grass seed shall be in accordance with FDOT Standard Specifications, Section 570 or shall be of a quality acceptable to the Department.

Procedures for topsoiling and seeding, including fertilization, shall comply with the applicable requirements of FDOT Standard Specifications, Section 570 (latest revision), or the governing permitting agency.

Areas designated to be seeded shall first be fine graded to match the surrounding areas and shall be sown only where the soil is moist and in proper conditions to induce growth. Seeding operations shall not be undertaken when wind velocities exceed 15 mph or the soil is unduly wet or otherwise not in a tillable condition. The Developer shall properly water and otherwise maintain all seeded and mulched areas until final acceptance by the Engineer. Any areas which fail to show a "catch" or uniform stand shall be reseeded and such reseeding shall be repeated, at no additional cost to the Department, until final acceptance.

F. SODDING

All areas designated by the Department to be sodded shall be sodded according to installation procedures and materials outlined herein.

Sod shall be of the same type as the surrounding grassed areas (unless specified otherwise by the Department), be free of weeds, and have well-matted roots. The sod shall be live, fresh, and uninjured at the time of placing.

Materials for sodding shall meet the applicable requirements of Sections 575 and 981 of the FDOT Standard Specifications, or the requirements of the governing permitting agency. Except as required to match surrounding grassed areas, sod may be St.

Augustine, Bahia, or other varieties as selected by the Department.

Areas designated to be sodded shall first be fine graded to match surrounding areas and the soil scarified or loosened to a suitable depth. Sod shall be placed as soon as possible after being dug and shall be shaded and kept moist from the time it is dug until it is planted. Methods for sodding shall meet the applicable requirements of Section 575 of the FDOT Standard Specifications (latest revision), or the governing permitting agency.

5.4 RECORD DRAWINGS

After completion of the construction and testing, the Developer shall submit the following, with proper street names included, to the Department's Construction Inspection Section:

1. One set of signed and sealed record drawings
2. One of set of mylars
3. One copy of the As-Built Drawings on disk or CD, in AutoCAD 2000 (preferred) or AutoCAD Version 14.

Record drawings shall show changes to and/or deviations from approved construction plans. Changed information shall be crossed out while remaining legible with the new information printed by the original. Significant changes such as pipeline routing or alignment should be highlighted on the drawings using a “cloud”. The following checklist details the items that shall be shown on the record drawings:

1. Locate pipe (horizontal and vertical alignment/depth of cover or top of pipe elevation) within the right-of-way at regular intervals, particularly noting where pipe alignment (horizontal or vertical) varies from design. Designate type of pipe (size and material). Sketch details as required.

2. Locate all alignment changes, both horizontal and vertical, by station and offset, elevation and depth of cover from finished grade.

3. Locate all valves, by station and offset, elevation and depth of cover from finished grade and show type of valve.

4. Locate all fittings (bends, reducers, sleeves, plugs, caps, offsets, tees, crosses, etc.) by station and offset, elevation and depth of cover from finished grade. Designate type of fittings. Sketch details as required.

5. Locate casing pipes by station and offset, elevation and depth of cover from finished grade at both ends. Note casing size.

6. Provide changes to finished grade.

7. Report any changes in alignment or elevation of other utilities. Report all utilities not shown on plans.

8. Where appropriate, locate pipe in relation to other physical features.

9. Provide valve to hydrant dimensions including diameter.

10. Verify by indicating on as-built drawing (by circling or check marking) whether or not design dimensions are correct.

11. Field changes of the design should be adequately detailed. Stations and offsets shall be noted. Sketch details as required.

12. All street names shall match those on the latest Plat. No alphabetic or numeric symbols will be accepted for street names.

5.5 TRANSFER OF WATER FACILITY OWNERSHIP

Completion of all construction, inspection, testing, certification, bonding, record drawing requirements and permitting requirements will be needed prior to transfer of the water facility. Then, the Developer will be required to execute an agreement between the City and the Developer transferring the water facilities for ownership, maintenance and operation to the City.

There will be no water meters installed until after receipt of the aforesaid agreement by the Developer.

After execution by the Developer, the agreement will be submitted to City Council for approval and to the Mayor for execution.

APPENDIX A

MATERIAL SPECIFICATIONS

MATERIAL SPECIFICATIONS
TABLE OF CONTENTS

GENERAL REQUIREMENTS MS-1

DUCTILE IRON PIPE
Push-on, Mechanical, Flexible, Manufactured Restrained Joint MS-1
Flange Joint MS-3

CASING SPACER SLEEVES MS-4

FITTINGS (4" - 24")
Mechanical Joint, Ductile Iron, Compact MS-5

FLANGED FITTINGS
Standard Class 125 ..... MS-6

OFFSETS (4"-12")
Ductile Iron, Mechanical Joint MS-7

ANCHOR FITTINGS
Ductile Iron, Compact MS-8

MECHANICAL JOINT BOLTS AND NUTS
For Pipe and Fitting Sizes 4-inch through 12-inch MS-10

MECHANICAL RESTRAINT DEVICES - for Ductile Iron Pipe
Push-on, Mechanical, and Flange Joint MS-11

SOLID SLEEVES (4" - 24")
Ductile Iron, Compact, MJ MS-13

RESILIENT SEAT GATE VALVES AND TAPPING VALVES MS-14

RUBBER-SEATED BUTTERFLY VALVES
Flange and Mechanical Joint MS-16

VALVE BOXES
Class 35 Grey Iron MS-19

DRY-BARREL FIRE HYDRANTS MS-19

TAPPING SLEEVES
Mechanical Joint MS-23
Steel or "O-Ring" Type MS-24

TAPPING SADDLES MS-25

HIGH DENSITY POLYETHYLENE TUBING MS-26

BRASS FITTINGS..... MS-27

SERVICE SADDLES..... MS-28

BLOW-OFF ASSEMBLY
Ball-Valve Type Assembly MS-29
Plunger-Valve Type Assembly..... MS-30

AIR RELEASE VALVES
Compound Lever Type..... MS-31

POLYVINYLCHLORIDE PIPE (PVC) MS-32

POLYETHYLENE ENCASEMENT MS-33

HIGH DENSITY POLYETHYLENE (HDPE)
Water Meter Boxes & Covers MS-34

VAULT SLABS AND COVERS MS-36

PRE-CAST THRUST BLOCKS MS-38

MATERIAL SPECIFICATIONS
General Requirements

All materials shall be in accordance with these Material Specifications and shall, in no event, be less than that necessary to conform to the requirements of any applicable law, ordinances and codes. All materials or products that will be in contact with the potable water shall be listed by the National Sanitation Foundation (NSF-61 listed) or by an approved certifying agency as conforming to the requirements of ANSI/NSF-61.

All materials shall be new, unused, and correctly designed. They shall be of standard first grade quality, produced by expert workmen, and intended for the use for which they are offered. Materials or equipment which, in the opinion of the Department, are inferior or are lower grade than indicated, specified or required, shall not be accepted.

DUCTILE IRON PIPE
(Push-On, Mechanical, Flexible, and Manufactured Restrained Joint)

1. GENERAL

Ductile iron pipe shall be manufactured in accordance with the latest revision of ANSI/AWWA C-151/A21.51. Pipe shall be furnished in 18 or 20 foot laying lengths. Pipe shall be lined with a standard thickness cement mortar lining and seal coated in accordance with the latest revision of ANSI/AWWA C-104/A21.4 and NSF 61. Pipe outside coating shall be an asphaltic coating in accordance with ANSI/AWWA C-151/A21.51, latest revision.

2. PRODUCTS

a. Push-on Joint Pipe

Push-on joint pipe shall be supplied with all joint accessories. Accessories shall include gaskets and lubricant in sufficient quantity for the proper assembly of each joint. Gaskets for push-on joints shall be made of ethylene propylene diene (EPDM) rubber. All plain ends shall be painted with a circular stripe on the pipe barrel to allow a visual means of checking proper assembly.

- All push-on joints shall be in accordance with ANSI/AWWA C-111/A21.11, latest revision.

- Pressure Class shall be as follows:

Diameter	Min. Pressure Class
4" → 16"	350
> 16"	250

b. Mechanical Joint Pipe

- Mechanical joint pipe shall be supplied with all joint accessories. Accessories shall include lubricant, gaskets, ductile iron glands, bolts, and nuts, all in sufficient quantity for the assembly of each joint. The bolts and nuts shall be manufactured of high-strength, low-alloy steel such as "Corten", "Usalloy", or "Acipalloy". The follower gland shall be ductile iron. Gaskets for mechanical joints shall be made of ethylene propylene diene (EPDM) rubber.

- All mechanical joints shall be in accordance with ANSI/AWWA C-111/A21.11, latest revision.

- Pressure Class shall be as follows:

Diameter	Min. Pressure Class
4" → 16"	350
> 16"	250

c. Flexible Joint Pipe

- Flexible-joint pipe shall be push-on, ball and socket, freely deflecting, and restrained using a corrosion resistant locking device. Thickness class shall be as follows:

Diameter	Min. Thickness Class
6"	54
8"	55
12"	56
16"	57

The joint shall be capable of a full 15° free deflection with no reduction in the waterway.

d. Manufactured Restrained Joint Pipe

- Joints shall be push-on in accordance with ANSI/AWWA C-111/A21.11. Joints shall be secured by wedged locking shims or a follower gland which shoulder against a retaining ring permanently fastened to the spigot end of the pipe within the joint. Gaskets for manufactured restrained pipe joints shall be made of EPDM rubber.

- Pressure Class shall be as follows:

Diameter	Min. Pressure Class
4 → 16"	350
> 16"	250

3. QUALITY CONTROL AND TESTING

a. All pipe shall meet or exceed all hydrostatic, performance and acceptance tests as set forth in ANSI/AWWA C-151/A21.51, latest revision.

b. When submitting for approval of ductile iron pipe not listed in Section 4, include manufacturer drawings and brochures that clearly indicate size, dimensions, weights, pressure class or thickness class, performance standards, etc. If this documentation is omitted, the ductile iron pipe may be rejected at the sole option of the City.

4. MANUFACTURER

a. All ductile iron pipe, unless specified below, shall be manufactured by U.S Pipe, American Pipe, Clow/McWane or approved equal.

b. Flexible Joint pipe shall be American Ductile Iron “Flex-Lok Boltless Ball Joint Pipe", U.S. Pipe “USI FLEX Boltless Flexible Joint Pipe" or approved equal.

c. Manufactured Restrained Joint pipe shall be American Ductile Iron “Flexring", U.S. Pipe “TR-Flex", Clow “Super-Lok", or approved equal.

DUCTILE IRON PIPE- FLANGED

1. GENERAL

a. The flanged pipe shall be ductile iron manufactured in accordance with ANSI/AWWA C-151/A21.51 and the National Association of Pipe Fabricators (NAPF) Product Standard 300, latest revisions, in nominal 18 or 20 foot laying length. The pipe shall be minimum Special Thickness Class 53 rated for a maximum working pressure of 250 psi, per ANSI/AWWA C-115/A21.15, latest revision.

2. PRODUCT

a. All flanges shall be ductile iron and shall be manufactured and installed on the ductile iron pipe in accordance with ANSI/AWWA Standard C-115/A21.15, and the National Association of Pipe Fabricators (NAPF) Product Standard 300-01, latest revisions. Bolt circle and bolt holes shall be drilled and faced to match American National Standards Institute (ANSI) B16.1, Class 125 Flanges. All necessary hex-head bolts and nuts, and full-faced gaskets for each joint size shall be furnished as a Flange Accessory Package. Bolts and nuts shall be high-strength, low-alloy steel such as "Corten", "Usalloy", or "AciPalloy".

b. Plain ends of flange ductile iron pipe shall be slightly beveled for use in a

push-on joint assembly. A circular stripe painted on the pipe barrel shall be provided as a visual means of checking proper assembly when used in a push-on joint.

c. All pipe interiors shall be lined with standard thickness cement mortar in accordance with ANSI/AWWA C-104/A21.4 latest revision. All pipe exterior surfaces shall be coated as specified in ANSI/AWWA C-151/A21.51, latest revision.

3. QUALITY CONTROL AND TESTING

a. All tests as specified in ANSI/AWWA C-115/A21.15 latest revision are required.

b. Submit in duplicate notarized certificates of conformance that all tests and inspections have been performed in accordance with ANSI/AWWA C-115/A21.15, latest revision.

c. When submitting for approval of a ductile iron flange pipe not listed in Section 4, include manufacturer drawings and brochures that clearly indicate size, dimensions, weights, performance standards, etc. If this documentation is omitted, the ductile iron flange pipe may be rejected at the sole option of the City.

4. MANUFACTURER

All ductile iron pipe shall be manufactured by U.S. Pipe, American Pipe, or approved equal.

CASING SPACER SLEEVES

1. GENERAL

Casing spacer sleeves shall be used to cradle carrier pipe through casing pipe.

2. PRODUCT

Casing spacer sleeves shall be manufactured in a two-piece, 12-gauge stainless steel strap which is heat fused PVC coated. Sleeve runners shall be a ultra-high molecular weight polymer with high resistance to abrasion and sliding wear. Runners shall be 2-inch or 2-½ inch in height.

3. QUALITY CONTROL AND TESTING

When submitting for approval of a casing spacer not listed in Section 4, include manufacturer drawings/brochures that clearly indicate size, dimensions, weights,

performance standards, etc. If this documentation is omitted, the casing spacer sleeves may be rejected at the sole option of the City.

4. MANUFACTURER

a. All casing spacer sleeves shall be manufactured by Cascade Manufacturing "P/S Series", PSI "C/G-2 Series", or approved equal.

FITTINGS (4" thru 24")
(Mechanical Joint, Ductile Iron, Compact)

1. GENERAL

a. Ductile iron compact mechanical joint fittings (4" - 24") shall be manufactured in accordance with ANSI/AWWA C-153/A21.53, latest revisions and the specifications stated herein.

b. Whenever the word "fitting" is used in this specification section, it shall mean "Compact Ductile Iron Fitting".

2. PRODUCT

a. The minimum pressure rating for fittings shall be 350 psi.

b. Joints shall be Mechanical Joints in accordance with ANSI/AWWA C-111/A21.11 and C-153/A21.53, latest revision, with exceptions noted herein. Mechanical Joint bolts and nuts shall be manufactured of high-strength, low-alloy steel such as "Corten", "Usalloy", or "ACIPalloy". Joints requiring a shorter bolt than called for in ANSI/AWWA C-111/A21.11 shall be supplied as required. Gaskets shall be made of EPDM rubber.

c. Exterior Coating and Interior Lining
Mechanical Joint fittings furnished shall have either of the exterior coating and interior lining systems described below:

(1) Cement Mortar Lining: Fittings furnished shall have a standard thickness cement mortar lining and be seal coated in accordance with ANSI/AWWA C-104/A21.4, latest revision. Fittings shall be listed by an approved certifying agency as conforming to all requirements of ANSI/NSF 61 and shall have an asphalt exterior coating which conforms to ANSI/AWWA C-153/A21.53.

(2) Fusion-bonded Epoxy: Fittings shall be coated inside and out with fusion-bonded epoxy, and be in conformance with the requirements of ANSI/AWWA C-116/A21.16 and AWWA C-550, latest revisions. Fittings shall be listed by NSF or by an approved certifying agency as

conforming to all requirements of ANSI/NSF 61.

3. QUALITY CONTROL AND TESTING

a. All fittings specified herein shall meet or exceed all hydrostatic, performance, and acceptance tests in accordance with ANSI/AWWA C-153/A21.53 latest revision.

b. When submitting for approval of ductile iron compact MJ fittings (4" - 24") not listed in Section 4, include manufacturer drawings and brochures that clearly indicate size, dimensions, weights, performance standards, etc. If this documentation is omitted, the ductile iron compact mechanical joint fittings (4" - 24") may be rejected at the sole option of the City.

4. MANUFACTURER

All ductile iron compact mechanical joint fittings specified herein shall be manufactured by U.S. Pipe, Clow, Sigma, Tyler/Union, McWane or approved equal.

FLANGED FITTINGS
(Standard Class 125)

1. GENERAL

All standard class 125 flanged fittings shall be manufactured in accordance with ANSI/AWWA Standard C-110/A21.10 and NAPF 200, latest revision.

2. PRODUCT

a. Standard class 125 flanged fittings shall have a minimum pressure rating of 250 psi. Flanges shall be round type, faced and drilled and shall conform to ANSI B16.1 for cast-iron or bronze pipe flange Class 125.

b. The joints shall be flanged in accordance with ANSI/AWWA C-110/A21.10 and NAPF 200, latest revision. All necessary hex-head bolts and nuts, and full-faced gaskets for each joint shall be furnished as a Flange Accessory Package and shall conform to ANSI B18.2.2; threads shall be manufactured in accordance with ANSI B1.1. Bolts and nuts shall be high-strength, low-alloy steel such as "Corten", "Usalloy", or "ACIPalloy". Bolt circle and bolt holes shall be drilled and faced to match American National Standard Institute (ANSI) B16.1, Class 125 Flanges.

c. All standard class 125 flanged fittings shall have a standard thickness cement mortar lining and shall be seal coated in accordance with AWWA Standard C-104, latest revision.

3. QUALITY CONTROL AND TESTING

a. All standard class 125 flanged fittings shall meet or exceed all test standards set forth in AWWA C-110.

b. When submitting for approval of standard class 125 flanged fittings not listed in Section 4, include manufacturer drawings and brochures that clearly indicate size, dimensions, weights, performance standards, etc. If this documentation is omitted, the standard class 125 flanged fittings may be rejected at the sole option of the City.

4. MANUFACTURER

Standard class 125 flanged fittings shall be manufactured by U.S. Pipe and Foundry Co., American Ductile Iron Pipe, Tyler/Union, or approved equal.

OFFSETS (4" - 12")
(Ductile Iron, Mechanical Joint)

1. GENERAL

All ductile iron mechanical joint offsets (4" - 12") shall be of ductile iron and manufactured in accordance with and ANSI/AWWA Standards C-110/A21.10 and C-111/A21.11, latest revisions.

2. PRODUCT

a. Ductile iron mechanical joint offsets (4" - 12") shall have a minimum pressure rating of 350 psi.

b. Joints shall be mechanical joints in accordance with C-111/A21.11, latest revision. All joint accessories shall be furnished with the fittings. Mechanical joint bolts and nuts shall be high-strength, low-alloy steel such as "Corten", "Usalloy", or "ACIPalloy". The follower gland shall be manufactured from ductile iron. The gasket shall be made of EPDM rubber.

c. Mechanical Joint fittings furnished shall have either of the exterior coating and interior lining systems described below:
   (1) Cement Mortar Lining: Fittings furnished shall have a standard thickness cement mortar lining and be seal coated in accordance with ANSI/AWWA C-104/A21.4, latest revision. Fittings shall be listed NSF or by an approved certifying agency as conforming to all requirements of ANSI/NSF 61 and shall have an asphalt exterior coating which conforms to ANSI/AWWA C-110/A21.53.
   (2) Fusion-bonded epoxy: Fittings shall be coated inside and out with fusion-bonded epoxy, and be in conformance with the requirements of ANSI/AWWA C-116/A21.16 and AWWA C-550, latest revisions. Fittings shall be listed by an approved certifying agency as conforming

to all requirements of ANSI/NSF 61.

3. QUALITY CONTROL AND TESTING

a. Ductile iron mechanical joint offsets (4" - 12") shall meet or exceed pressure, hydrostatic and all other tests set forth in ANSI/AWWA C-110/A21.10, latest revision.

b. Submit in duplicate notarized certificates of conformance that all tests and inspections performed on ductile iron mechanical joint offsets (4" - 12") as required by the ANSI/AWWA standards C-110/A21.10 have been satisfied.

c. When submitting for approval of ductile iron mechanical joint offsets (4" - 12") not listed in Section 4, include manufacturer drawings and brochures that clearly indicate size, dimensions, weights, performance standards, etc. If this documentation is omitted, the ductile iron mechanical joint offsets (4" - 12") may be rejected at the sole option of the City.

4. MANUFACTURER

Ductile iron mechanical joint offsets (4" - 12") shall be manufactured by U.S. Pipe and Foundry Co., Sigma, Tyler Pipe, or approved equal.

ANCHOR FITTINGS
(Ductile Iron, Compact)

1. GENERAL

All ductile iron compact anchor fittings shall be manufactured in accordance with ANSI/ AWWA C-153 and C-111/A21.53 and A 21.11, latest revisions and as specified herein.

2. PRODUCT

a. Tees

(1) Both joints on the run of all tees shall be mechanical joints in accordance with ANSI/AWWA Standard C-111/A21.11, latest revision.

(2) All mechanical joints shall be supplied with a joint accessories package (bolts, nuts and gasket) as part of the anchor fitting. All anchor fittings shall be compatible with mechanical joint connections in accordance with ANSI/AWWA C-111/21.11, latest revision, and restrain such fittings as to eliminate the need for additional thrust restraints. Gaskets shall be made of EPDM rubber.

(3) The standard anchor tee branch shall have an anchoring "plain end" which includes an integral or split follower gland, suitable for connecting to a mechanical joint fitting meeting ANSI/AWWA C-111/A21.11.

b. Anchor Elbow and Anchor Coupling

The Anchor x Anchor elbows and anchor couplings shall have anchoring “plain ends” for both ends. These "plain ends" shall have integral or split follower glands, suitable for mechanical joint fittings meeting ANSI/AWWA C-111/A 21.11.

c. Joint Accessories

(1) All bolts and nuts for joints shall be high-strength, low-alloy steel such as "Corten", "Usalloy," or "ACIPalloy."

(2) All joint accessories shall be furnished with anchor fittings.

d. All ductile iron compact anchor fittings shall be furnished with a standard thickness cement mortar lining and seal coating in accordance with AWWA Standard C-104, latest revision.

e. Fittings shall have an exterior, asphalt coating which conforms to ANSI/AWWA C-153/A21.53.

f. All ductile iron compact anchor fittings shall have a minimum pressure rating of 350 psi.

3. QUALITY CONTROL AND TESTING

a. All ductile iron compact anchor fittings shall meet or exceed acceptance, performance and hydrostatic testing in accordance with ANSI/AWWA C-111and C-153/A21.11and A21.53, latest revisions.

b. When submitting for approval of ductile iron compact anchor fittings not listed in Section 4, include manufacturer drawings and brochures that clearly indicate size, dimensions, weights, performance standards etc.
If this documentation is omitted, the ductile iron compact anchor fittings may be rejected at the sole option of the City.

4. MANUFACTURER

Ductile iron compact anchor fittings shall be manufactured by U.S. Pipe and Foundry Co., Clow, American Ductile Iron Pipe, McWane, or approved equal.

MECHANICAL JOINT BOLTS AND NUTS
(For Pipe and Fitting Sizes 4” through 12”)

1. GENERAL

All mechanical joint bolts and nuts (pipe 4" - 12") shall be manufactured in accordance with ANSI/AWWA C-111/A21.11, latest revision, and shall also adhere to the following specification.

2. PRODUCT

a. All mechanical joint bolts shall be a Tee-head design with hexagonal nuts. Dimensions shall be in accordance with ANSI/AWWA C-111/A21.11.

b. All bolts and nuts shall be manufactured of high-strength, low alloy steel in conformance with ANSI/AWWA C-111/A21.11 and ASTM A242, latest revisions.

c. All bolts shall be designed for internal and external threads to conform with ANSI/ASME B1.1 and B1.2. Thread form shall conform to the standards and dimensions of the coarse-thread series Unified Coarse (UNC); external threads shall be made in compliance with Class 2A limits, and internal threads shall be made in compliance with Class 2B limits.

3. QUALITY CONTROL AND TESTING

When submitting for approval of mechanical joint bolts and nuts not listed in Section 4, include manufacturer drawings and brochures that clearly indicate size, dimensions, weights, performance standards, etc. If this documentation is omitted, the mechanical joint bolts and nuts (pipe 4" - 12") may be rejected at the sole option of the City.

4. MANUFACTURER

Mechanical joint bolts and nuts (pipe 4" - 12") specified herein shall be domestically manufactured by Cor-Ten, USX and Mayari-R, Bethlehem Steel, or approved equal.

MECHANICAL RESTRAINT DEVICES, for DUCTILE IRON PIPE
(for Push-on, Mechanical, and Flange Joint Pipe and Fittings)

1. GENERAL

Mechanical restraint devices shall be used to restrain together plain ends of ductile iron pipe to push-on, mechanical, or flange joints which meet ANSI/AWWA C-110 and C-111/A21.10 and A21.11, latest revisions.

Wedge action restraint for mechanical and flange joint pipe and fittings shall be incorporated in the design of the follower gland and shall include a restraining mechanism which, when activated, imparts multiple wedging actions against the pipe, thereby increasing its restraint on the pipe as the joint tries to separate.

2. PRODUCT

a. Push-on Joint Restraint (for 4" - 16" only)

Push-on joint restraint devices shall be the gasket-type, consisting of an EPDM rubber gasket with stainless steel locking segments vulcanized into the gasket.

b. Flange Joint Restraint

Flange joint restraint fittings shall include all individually activated gripping wedges and gaskets. Flange joint restraint fittings shall attach to the plain end of a pipe by wedge screws to produce a flange which joins to an existing integral companion flange. Flange joint restraint fittings shall be constructed of ductile iron meeting ASTM A536 and manufactured in accordance with ANSI/AWWA C-110/A21.10 and/or C-111/A21.11, latest revision. All flanges shall have bolt circle and bolt holes which match a Class 125 flange and are compatible with ANSI/AWWA C-115/A21.15. Gasket shall be made of EPDM rubber.

c. Mechanical Joint Restraint

(1) The wedge action glands shall be manufactured of ductile iron conforming to ASTM A536-80. The wedging nut and bolt shall be manufactured of ductile iron which has been heat-treated to a minimum hardness of 370 BHN.

(2) Wedge action glands shall be dimensioned such that they can be used with standard mechanical joint bell and tee-head bolts conforming to ANSI/AWWA C-111/A21.11 and ANSI/AWWA C-153/A21.53, latest revision.

d. Coatings

(1) Flange Adapters shall be provided with painted "shop coat".

(2) Retainer glands shall be provided with a bituminous coat.

(3) Push-on restraint fittings shall be provided with a bituminous coat.

3. QUALITY CONTROL AND TESTING

a. Pipe restrained with mechanical restraint devices specified shall be capable of withstanding the following pressures:

Push-on and Mechanical Joint Pipe -	4" - 16"	min. 350 psi
	>16"	min. 250 psi
Flange Joint Pipe -	4" - 36"	min. 250 psi

b. Burst pressure tests shall be performed as specified in ANSI/AWWA C-111/A21.11, latest revision.

c. When submitting for approval of restraint devices not listed in Section 4, include manufacturer drawings and brochures that clearly indicate size, dimensions, weights, performance standards, etc. If this documentation is omitted, the restraint fittings may be rejected at the sole option of the City.

d. Pipe restrained with retainer glands specified shall be capable of withstanding twice the rated pressure of the restraint device for five minutes with no leakage or movement.

4. MANUFACTURER

a. Ductile iron pipe push-on joint restraint devices shall be approved, equal to, or better than U.S. Pipe "Field-Lok" Gasket, and American "Fast-Grip" Gasket.

b. Ductile iron pipe flange joint restraint devices shall be approved, equal to, or better than EBAA Iron "Megaflange Series 2100" or "1000 EZ Flange", or Ford Meter Box Company "Uni-flange Series 400-C".

c. Wedge action restraint for ductile iron mechanical joint pipe shall be approved, equal to, or better than EBAA Iron "Megalug, Series 1100-SD", Starpipe "StarGrip Series 3000", U.S. Pipe "MJ Gripper Gland", or approved equal.

SOLID SLEEVES (4" – 24")
(Ductile Iron, Compact, MJ)

1. GENERAL

Solid sleeves shall be used to join two plain ends of pipe or repair a damaged pipe.

2. PRODUCT

a. Solid sleeve lengths shall be up to 24-inches. The solid sleeve shall be capable of having two plain ends of pipe inserted into opposite ends of the sleeve. The sleeve is then to be sealed to the pipe by a mechanical joint at each end of the sleeve.

b. All sleeves shall be manufactured of ductile iron. Solid sleeves shall be manufactured in accordance with ANSI/AWWA Standard C-153/A21.53, latest revision. All sleeves shall be rated for a minimum working pressure of 350 psi.

c. All solid sleeve sealing ends shall be mechanical joints in accordance with ANSI/AWWA C-111/A21.11, latest revision. All joint accessories shall be furnished with the fittings. All bolts and nuts shall be made of high-strength, low-alloy steel such as "Corten", "Usalloy", or "Acipalloy". The gasket shall be for a standard Mechanical Joint, in accordance with ANSI/AWWA C-111/A21.11, latest revisions, and be made of EPDM rubber. The follower gland shall be manufactured from ductile iron at least ASTM A536, Grade 70-50-05 in accordance with ANSI/AWWA C-111/ A21.11, latest revision

d. All ductile iron compact solid sleeves shall be furnished with a standard thickness cement mortar lining and seal coating in accordance with AWWA Standard C-104, latest revision.

e. Fittings shall have an exterior, asphaltic coating which conforms to ANSI/AWWA C-153/A21.53.

3. QUALITY CONTROL AND TESTING

a. All solid sleeves shall meet or exceed all testing requirements of ANSI/AWWA C-153/A21.53.

b. When submitting for approval of solid sleeves not listed in Section 4, include manufacturer drawings and brochures that clearly indicate size, dimensions, weights, performance standards, etc. If this documentation is omitted, the solid sleeves may be rejected at the sole option of the City.

4. MANUFACTURER

a. All ductile iron mechanical joint solid sleeves shall be manufactured by U.S Pipe, Sigma, Tyler/Union, American Cast Iron Company, Clow, or approved equal.

RESILIENT SEAT GATE VALVES AND TAPPING VALVES

1. GENERAL

a. Resilient seat gate valves covered under this specification shall be suitable for installation on ductile iron, cast iron or PVC pipe. Resilient seat valves shall comply with all requirements of AWWA C-509 or AWWA C-515, latest revision, as applicable.

b. Standard valves shall refer to resilient seat gate valves with mechanical joints at both ends meeting specifications stated herein. Standard valves provided may be either per AWWA C-509 (CI or DI) or AWWA C-515 (DI).

c. Tapping valves shall refer to resilient seat gate valves with one end mechanical joint, and one end flanged, meeting specifications stated herein.

d. Resilient seats shall be made of EPDM rubber.

2. PRODUCT

a. Standard and tapping valves shall be of the non-rising stem type that shall open by turning a 2-inch square AWWA operating nut clockwise, open right.

b. Standard and tapping valve stems shall be high-strength bronze manufactured in accordance with the appropriate AWWA C-509/C-515, latest revisions. Stems, stem nuts and wedges shall act independently. Stems shall be sealed by at least two O-ring seals; one located above and below the thrust collar. Stems shall be provided with low friction torque reducing thrust bearings. Thrust washers may be used to separate the thrust collar from iron surfaces.

c. Non-metallic resilient seats for standard and tapping valves shall be bonded to the gate; mechanically attached seats will not be accepted. The method of bonding shall be approved by ASTM D 429 A or B and as specified in AWWA C-509/C-515.

d. All mechanical and flanged joints for standard and tapping valves shall conform to ANSI/AWWA C-111/A21.11 and C-110/A21.10, latest revisions. Mechanical and flanged joints shall be supplied with accessories package including bolts, nuts and gasket. Bolts and nuts shall be manufactured of high-strength, low-alloy steel such as "Corten", "Usalloy", or "ACIPalloy". Gaskets shall be made of EPDM rubber.

e. Tapping Valves

(1) The tapping valve interior waterway shall be full opening (full port) and capable of passing a full sized shell cutter through the valve.

(2) The tapping valve shall have a tapping flange having a raised face or

lip designed to engage the corresponding recess in a tapping sleeve flange, in accordance with MSS SP-60, followed by a mechanical joint end.

(3) All tapping valves shall be interchangeable with other makes of tapping sleeves.

3. QUALITY CONTROL AND TESTING

a. The catalogs and maintenance data shall contain sufficient detail to serve as a guide in the valve assembly, valve disassembly, the ordering of repair parts, complete valve lubrication and valve maintenance information.

b. Bolt manufacturer certification of compliance shall be provided with each mechanical joint accessory package.

c. The resilient seat shall be bubble-tight against a 200-psi water working pressure. Shell test pressure for testing a valve shall be twice the rated working pressure and maintain zero leakage at all times.

d. All valves shall meet or exceed test specifications as set forth in AWWA C-509 (or C-515, as applicable), latest revision.

e. When submitting for approval of resilient seat valves not listed in Section 4, include manufacturer drawings and brochures that clearly indicate size, dimensions, weights, performance standards, etc. If this documentation is omitted, the resilient seat valves may be rejected at the sole option of the City.

4. MANUFACTURER

Resilient seat valves shall be manufactured by Clow Valve Co. (F-6100, F-6114), Mueller Co. (T2360, H615), U.S. Pipe and Foundry (MetroSeal 250), Kennedy (Ken Seal 4571 and 7571), AVK (Series 25), American Flow Control (Series 500, Series 2500, 865 RW) or approved equal.

RUBBER-SEATED BUTTERFLY VALVES
(Flange and Mechanical Joint)

1. GENERAL

All standard flanged and mechanical joint rubber-seated butterfly valves shall be suitable for installation into transmission and distribution mains or any other piping as required by the City of Tampa Water Department.

2. PRODUCT

a. All butterfly valves shall have a minimum rating of Class 150B. Valves shall be manufactured in accordance with AWWA C-504, latest edition.

b. The mechanical joint of the valves shall be in accordance with ANSI/AWWA C-111/A21.11, latest revision, except as noted herein.

c. The flanged joint of the valves shall be in accordance with American National Standards Institute (ANSI) B16.1, Class 125, or ANSI/AWWA C-110/A21.10 for cast iron flanges.

d. Accessories (bolts, gaskets, etc.) shall be supplied by the valve manufacturer and the joint bolts and nuts shall be made of high-strength, low-alloy steel such as "Corten", "Usalloy", or approved equal. Gaskets for mechanical joints shall be made of EPDM rubber.

e. The valve seat shall be located on the valve body or disc and shall provide drip-tight shutoff for pressure differential of 150 psig versus 0 psig in either direction. The seat shall be made of EPDM rubber. For valve seats mounted on the disc, the valve seat shall be vulcanized to a stainless steel seat ring which shall be mechanically attached to the disc with stainless steel bolts. For valve seats mounted on the body, the valve seat shall be bonded to the body and shall meet test procedures as outlined in ASTM D429 Method A or Band as specified in AWWA C-509. Valve seat mating surfaces shall be minimum 316 Stainless Steel.

f. The valve shaft shall be a one-piece unit extending completely through the valve disc or may be stub shaft construction for valves eighteen inches (18") and above. Shaft materials shall conform to AWWA Standard C-504, Section 3.3, latest revision. No deviation will be accepted. Valve shafts shall be minimum 316 Stainless Steel.

g. The valve disc shall have no external ribs transverse to the flow and shall be constructed of material as specified in AWWA C-504, Section 3.4. No deviation will be accepted.

h. Shaft seals shall be standard "O" ring or "V" packing seals, and all seals shall be replaceable without disassembly of the valve.

i. The operator shall be manual type opening to the right (clockwise) and equipped with a 2-inch AWWA operating nut which conforms to AWWA C-500. The operator shall be gear type or traveling-nut type. All operators shall be totally enclosed, sealed, gasketed, and lubricated for underground service as specified in AWWA C-504, Section 3.8. The operator shall be able to apply output torque required to operate the valve under adverse conditions without exceeding input torques as allowed under AWWA Standard C-504,

Section 3.8. It shall also be capable of withstanding overload input torque of four-hundred-fifty (450) ft. lbs. against the disc stop as allowed by AWWA Standard C-504, latest revision. Disc stops shall not be in the waterway.

j. Flanged Joint Valves

Flanged valves provided shall be designed for above ground, in plant operations and shall be provided with hand wheel operators in conformance with AWWA C-500, latest revision.

Hexagonal Nuts & Hex-Head Bolts - The appropriate size and number of each as required by the size of the valve shall be supplied per accessory set. They shall be manufactured of high-strength, low-alloy steel such as "Corten", "Usalloy", or "Acipalloy".

Gasket - One full-faced gasket per accessory set shall be supplied. It shall be suitable for use in a Flange Joint, be made of EPDM rubber and in accordance with AWWA Standard C-111, latest revision.

k. Mechanical Joint Valves

Mechanical joint valves provided shall be designed for buried service.

Quantities - Two Mechanical Joint Accessory Sets shall be furnished with each valve.

Hexagonal Nuts & "T" - Head Bolts shall be manufactured of high-strength, low-alloy steel such as "Corten", "Usalloy", or "ACIPalloy".

Gasket - One per accessory set shall be supplied. It shall be suitable for use in a Mechanical Joint, be made of EPDM rubber material and be in accordance with, ANSI/AWWA Standard C-111/A21.11, latest revision.

Follower Gland - One per accessory set shall be supplied. It shall be manufactured of ductile iron or gray iron (minimum ASTM A536, Grade 70-50-05) in accordance with ANSI/AWWA Standard C-111/A21.11, latest revision, as applicable.

l. Valve body interior and disc shall have an epoxy protective coating meeting AWWA Standard C-550, latest revision.

3. QUALITY CONTROL AND TESTING

a. Flow Characteristics - The maximum non-shock shutoff pressure should be 150 psi.

b. Certification - The manufacturer shall provide the Tampa Water Department

with an affidavit certifying that all valves supplied have been manufactured and tested in accordance with all of the aforementioned standards.

c. When submitting for approval of rubber-seated butterfly valves (flanged and mechanical joint) not listed in Section 4, include manufacturer drawings and brochures that clearly indicate size, dimensions, weights, performance standards, etc. If this documentation is omitted, the rubber-seated butterfly valves may be rejected at the sole option of the City.

d. Shop drawings submittals shall have catalog and maintenance data in sufficient detail to serve as a guide in the assembly and disassembly of the butterfly Valves, the ordering of repair parts, and complete lubrication and maintenance information.

4. MANUFACTURER

Rubber-seated butterfly valves (flanged and mechanical joint) shall be domestically manufactured by Pratt, DeZurik Model BAW, or approved equal.

VALVE BOXES
(Class 35 Grey Iron)

1. GENERAL

Valve boxes provided under this specification shall be designed to provide access to an underground valve 2-inch operating nut at a depth of 2-feet or greater. Valve boxes shall be suitable for installation in areas subject to heavy vehicle traffic loading.

2. PRODUCT

Valve boxes shall include removable valve box cover with "WATER" label as shown on the Standard Dimension detail titled "Valve Box". All valve boxes shall be manufactured of Class 35 grey iron. All valve boxes shall consist of four parts: valve box covers, risers, top sections, and bottom sections. All valve boxes shall be the same dimension, within manufacturing tolerances, as shown in Standard Dimension Detail "Valve Box".

3. QUALITY CONTROL AND TESTING

a. When submitting for approval of valve boxes not listed in Section 4, include manufacturer drawings and brochures that clearly indicate size, dimensions, weights, performance standards, etc. If this documentation is omitted, the valve boxes may be rejected at the sole option of the City.

4. MANUFACTURER

All valve boxes shall be domestically manufactured Union/Tyler, Pipeline Components, Inc., or approved equal.

DRY-BARREL FIRE HYDRANTS

1. GENERAL

All Dry-Barrel Fire Hydrants ("Hydrants") provided under this specification shall be manufactured and shall perform in accordance with these technical specifications and AWWA C-502 latest revision. Hydrants shall further comply with all requirements of Associates Factory Mutual Fire Insurance Companies and shall be listed with Underwriter's Laboratories. These technical specifications shall take precedence over the above referenced standards.

2. PRODUCT

a. Hydrants provided shall have a main valve of the full compression design, opening against and closing with pressure. Hydrant main valve shall be encapsulated in EPDM rubber. Hydrants shall be provided with a breakable traffic feature designed so that the nozzle section of the hydrant can be rotated a full 360 degrees. Hydrants shall be designed so that removal of the seat drain valve mechanism, internal rod and all working parts, can be accomplished through the top of the hydrant without disturbing the groundline joint or nozzle section. Main valve opening shall be 5¼-inch. Hydrants shall have the "FM" symbol cast into the barrel to show compliance with Factory Mutual Fire Insurance Companies.

b. Hydrant nozzle section, bonnet, frangible safety flange and lower valve plate shall be cast iron or ductile iron in accordance with AWWA C-502. Hydrant's lower barrel and shoe shall be ductile iron only and shall be manufactured in accordance with AWWA C-502, latest revision. Upper valve plates shall be bronze, cast iron or ductile iron manufactured in accordance with AWWA C-502. Break couplings shall be cast iron or epoxy coated steel. Shoe shall have a mechanical joint inlet in accordance with AWWA C-111, latest revision. Mechanical joint nuts and bolts shall be manufactured of high-strength, low-alloy steel equal to or better than "Corten", "Usalloy, or "ACIPalloy". The interior of the shoe and upper and lower valve plates shall be epoxy coated in accordance with AWWA C-550, latest revision. Bronze upper valve plates need not be epoxy coated.

c. All external bolts, studs, and nuts above the groundline shall be low-zinc bronze or stainless steel. Below the ground line bolts, studs and nuts shall be high-strength, low-alloy steel as specified in Section 2.b or stainless steel.

When bolts are used at the break coupling they shall not be frangible.

d. Hydrants shall be provided with two 2½-inch bronze nozzles 180 degrees apart and one 4½-inch bronze nozzle. All nozzles shall be at the same elevation. Nozzle outlet threads shall be National Standard fire hose coupling screw thread as described in Appendix A of AWWA C-502. Hydrant nozzles shall be threaded or twist locked into the hydrant nozzle section with a locking device to secure the nozzle. Nozzles which are threaded into the hydrant nozzle section shall first be coated with an approved anti-seize compound as specified in Section 2.i. Nozzle caps shall be cast iron or ductile and shall be provided with gaskets. Nozzle caps shall have nut configuration to match hydrant operating nut. Chains shall not be provided on nozzle caps.

e. Hydrants shall be of the dry top bonnet type with non-rising stem. The operating threads shall be contained within a sealed lubricant reservoir. The operating rod shall be sheathed where it passes through a double "O" ring seal, sealing the operating threads from the water within the hydrant at all times when the valve is in the open or closed position. Another "O" ring shall prevent water from passing between the operating shaft and the sheath. The downward travel of the operating rod and valve assembly shall be controlled by a travel stop device located in the bonnet only. The travel stop device shall prevent the bottom of the main valve from making contact with the epoxy coating_of the shoe. Travel stop devices located on the bottom of the operating rod are not acceptable.

f. The bronze operating nut shall be fully covered with a cast or ductile iron weathershield and protection device. The weather shield and protection device shall incorporate a standard 1½-inch operating nut in accordance with AWWA C-502, Section 3.2.9. All hydrants shall open counterclockwise. The operating nut shall have at least one, anti-friction thrust washer to reduce operating torque when opening the hydrant.

g. Hydrants provided shall have a bronze main valve seat ring threaded into a bronze sub-seat or drain ring. The drain outlet for the hydrant shall be eliminated as part of the casting or machining process, or must be completely plugged with a bronze plug.

h. Hydrants provided shall be coated as specified in AWWA C-502 Section 4.2, latest revision. Additionally, hydrants shall be coated above the groundline with a WHITE primer coating with a minimum dry film thickness of four (4) mils. After installation, hydrants shall be painted with Porter, OSHA-approved, high-grade enamel paint, Federal Safety Yellow. The primer applied by the manufacturer shall be compatible with the final enamel paint applied in the field.

i. The hydrant operating threads shall be lubricated with an anti-seize

compound paste, applied upon assembly. Approved anti-seize compound is Bostik, Never-Seez regular grade (NS 160). Approval for other anti-seize compounds shall be requested in writing to the Tampa Water Department, accompanied with a Material Safety Data Sheet from the manufacturer of the compound for review. Anti-seize compound shall not contain any heavy metals.

j. In the event the manufacturer uses locking keys to secure the lower barrel to shoe, all locking keys shall be fully coated with a Water Department approved anti-seize compound, applied upon assembly.

3. QUALITY CONTROL AND TESTING

a. Hydrants provided under this specification shall have a maximum permissible head loss of 2.5 psi when flowing at 1,000 gpm through the 4½-inch nozzle, as described in Section 5 of AWWA C-502.

b. The following shall be supplied:

1) Certified test results from an independent testing laboratory, including head loss versus flow curves indicating that the hydrants being provided are in conformance with Section 3.a of this specification.

2) Certification of Underwriter's Laboratories listing of the hydrants being provided.

3) Certification of compliance with Associates Factory Mutual Fire Insurance Companies specifications for the hydrants being provided.

4) Two sets of engineering performance data, model catalog, and repair parts manual and price lists. Such data shall contain, but is not necessarily limited to, head loss versus flow curves, hydrant parts and materials, and hydrant dimensions. Catalog and maintenance data shall also be supplied in sufficient detail to serve as a guide in the assembly and taking down of the fire hydrants, the ordering of repair parts, and complete lubrication and maintenance information.

4. MANUFACTURER

a. Hydrants shall be manufactured, assembled, and tested within the United States. Domestic manufacturer of hydrants shall have continuously manufactured, catalogued, sold, and in service the hydrants in size proposed for a minimum of five (5) years.

d. Hydrants shall be U.S. Pipe Metropolitan 250 5-¼, American Darling B-84-B 5-¼ or Clow Medallion 5-¼.

TAPPING SLEEVES
(Mechanical Joint)

1. GENERAL

Tapping sleeves (mechanical joint) shall be constructed of ductile iron. All tapping sleeves shall be suitable for tapping cast iron, ductile iron pipe, C-900 PVC pipe, and all pipe manufactured in accordance with ANSI A21 Standard, AWWA, and these specifications.

2. PRODUCT

a. Tapping sleeves shall be of the split sleeve design; one half shall contain the outlet hub, gasket, and tapping flange; the other shall form the back of the sleeve. A ¾" NPT test plug shall be provided on the outlet throat of the sleeve for pressure testing the sealed sleeve at 150 psi prior to tapping the pipe. All tapping sleeves shall allow a full-size cutting head to pass through the outlet of the hub.

b. Tapping sleeves shall be constructed of ductile iron and shall be manufactured in accordance with ASTM A536.

c. All bolts and nuts joining the two halves of the sleeve shall be high strength, low alloy steel in accordance with AWWA C-111, latest revision.

d. Tapping sleeve connection flanges shall conform to AWWA C-110/ANSI B16.1 Class 125 with counter bore per MSS SP-60 dimensions.

e. Mechanical joint tapping sleeves shall form a mechanical joint at each end of the sleeve after bolting the halves together. The sleeve shall then be sealed to the pipe by assembling the mechanical joint using split gaskets and follower glands.

f. All ductile iron sleeves shall have an outside bituminous coating in accordance with AWWA C-110, latest revision.

3. QUALITY CONTROL AND TESTING

When submitting for approval of tapping sleeves (mechanical joint) not listed in Section 4, of this specification include manufacturer drawings and brochures that clearly indicate size, dimensions, weights, performance standards, etc. If this documentation is omitted, the tapping sleeves (mechanical joint) may be rejected at the sole option of the City.

4. MANUFACTURER

Tapping sleeves (mechanical joint) shall be domestically manufactured by U.S.

Pipe, Mueller Co., American Flow Control, or approved equal.

TAPPING SLEEVES
(Steel/"O-Ring" Type)

1. GENERAL

Tapping sleeves (steel/"O-ring" type) shall be constructed of high strength steel and shall be manufactured in accordance with ASTM A285. Steel tapping sleeves shall be suitable for tapping ductile iron pipe, C-900 PVC pipe, and all pipe manufactured in accordance with ANSI A21 Standards, AWWA, and these specifications.

2. PRODUCT

a. All tapping sleeves (steel or "O-ring" type) shall be split sleeve design; one half shall contain the outlet hub, gasket and tapping flange; the other half shall form the back. A ¾" NPT test plug shall be provided on the outlet throat of the sleeve for pressure testing the sealed sleeve at 150 psi prior to tapping the pipe. All tapping sleeves shall allow a full-size cutting head to pass through the outlet of the hub.

b. All bolts and nuts joining the two halves of the sleeve shall be high strength, low alloy steel in accordance with AWWA C-111, latest revision.

c. All tapping sleeve connection flanges shall be a Class 125 flanged joint, conforming to AWWA C207 Class D, ANSI 150 lb. with a counter bore per MSS SP-60 dimensions.

d. Tapping sleeves shall seal to the pipe by the use of a confined "O-ring" gasket around the tap opening between the sleeve and pipe or by a full circumferential gasket between the sleeve and pipe. Gaskets shall be made of EPDM rubber.

e. All steel tapping sleeves shall be finished with fusion-bonded epoxy coating both inside and outside, in accordance with AWWA C-550, latest revisions.

3. QUALITY CONTROL AND TESTING

When submitting for approval tapping sleeves ("o-ring" type) not listed in Section 4, include manufacturer drawings and brochures that clearly indicate size, dimensions, weights, performance standards, etc, which completely substantiates the tapping sleeves compliance with this specification. If this documentation is omitted, the tapping sleeves may be rejected at the sole option of the City.

4. MANUFACTURER

All tapping sleeves (steel/"o-ring" type) shall be manufactured domestically and shall be JCM 412, Smith Blair 622, Mueller H615, Ford Meter Box FTSC, U.S. Pipe T-28 Dual Compression Tapping Sleeve, or approved equal.

TAPPING SADDLES

1. GENERAL

Tapping saddles shall be constructed of heavy gray cast iron, or ductile iron, with the attachment straps, nuts, and washers constructed of corrosion resistant alloy steel in accordance with AWWA C-111, latest revision.

2. PRODUCT

a. All tapping saddles shall be suitable for Class C & D gray cast iron, ductile cast iron pipe, and all pipe manufactured in accordance with ANSI A21 Standards.

b. Tapping saddles shall seal to the pipe by the use of a confined "O- ring" gasket, and shall be able to withstand a pressure of 150 psi with no leakage in accordance with AWWA C-110, latest revision. A ¾" NPT test plug shall be provided for pressure testing.

c. The outlet branch flange shall be Class 125 flange joint with a counter bore per MSS SP-60 dimensions.

d. Tapping saddles shall have outside bituminous coating in accordance with AWWA C-110, latest revision.

3. QUALITY CONTROL AND TESTING

When submitting for approval a tapping saddle not listed in Section 4, include manufacturer drawings and brochures that clearly indicate size, dimensions, weights, performance standards, etc. If this documentation is omitted, the tapping saddle may be rejected at the sole option of the City.

4. MANUFACTURER

Tapping saddles shall be manufactured by American Ductile Iron Pipe, U.S. Pipe, or approved equal.

HIGH DENSITY POLYETHYLENE TUBING
(3-inch and smaller)

1. GENERAL

a. All water service lines three (3) inches in diameter and smaller shall be constructed of high-density polyethylene (HDPE) tubing.

2. PRODUCT

a. Polyethylene extrusion compound from which the PE pipe and tubing are extruded shall comply with the applicable requirements for the Type III, color and U.V. code E, Class C, PE 3408, very high molecular weight polyethylene plastic material manufactured in accordance with AWWA C-901, latest revision, as specified in ASTM D1248. 2-inch and smaller HDPE pressure tubing shall have a color and ultraviolet code E and a minimum cell classification of 334434E as specified in ASTM D3350.

b. The polyethylene extrusion compound shall be of virgin quality approved for potable water service by the National Sanitation Foundation. The polyethylene extrusion compound shall be manufactured with sufficient and proper ultra-violet color stabilizers.

c. Polyethylene tubing shall be SDR-9 200 psi.

d. The standard dimension ratio (SDR) shall be 9 for CTS tubing sizes. The average outside diameter, minimum wall thickness and respective tolerances for any cross-section shall be as specified in ASTM D2737. The average inside diameter, minimum wall thickness, and respective tolerances for any cross-section shall be as specified in ASTM D2239.

e. Polyethylene tubing shall be blue and have U.V. color stabilizers so that the pipe is not affected in color or flexibility for a minimum of four (4) years.

3. QUALITY CONTROL AND TESTING

a. Environmental stress cracking resistance testing shall be performed in accordance with ASTM D1693, Condition C, and shall have no failures after 5000 hours duration.

b. When submitting for approval of HDPE not listed in Section 4, include manufacturer drawings and brochures that clearly indicate size, dimensions, weights, performance standards, etc. If this documentation is omitted, the HDPE may be rejected at the sole option of the City.

4. MANUFACTURER

Three inch and smaller HDPE tubing shall be Performance Pipes “DriscoPlex”,

Endot “EndoPure”, Vanguard “Bruiser”, or approved equal.

BRASS FITTINGS

1. GENERAL

All brass fittings for service lines shall be provided in accordance with these specifications.

2. PRODUCT

a. All brass fittings shall be manufactured of brass, cast and machined in accordance with AWWA Standard C-800, latest revision.

b. All stops shall be full port and have a flow passage area equivalent to the fitting outlet flow area.

c. The inlet connection shall be the AWWA Taper thread. The outlet connection shall be a pack-joint outlet for copper or plastic tubing.

d. Corporation stops shall be manufactured from cast bronze with machined fitting surfaces, and in accordance with AWWA C-800, in sizes up to and including 2-inches. Corporation stops with compression joint outlets for copper or plastic tubing shall be Type F1000, for sizes up to 1-¼" and Type FB1000 for 1-½" and 2" sizes, as manufactured by Ford Meter Box Company, or approved equal.

e. Curb stops shall be ball valve, roundway, with check, with lock wing cast on stop body and operating tee cap to provide for locking the stop in closed position. Curb stops for use with copper or plastic service shall have an inlet connection with a compression joint and an outlet connection with female iron pipe thread, as manufactured by Ford Meter Box Company B41WR or KV43WR for 2-inch service line with padlock wings, or approved equal.

f. All brass fittings shall be stamped with the manufacturer’s name.

3. QUALITY CONTROL AND TESTING

When submitting for approval of brass fittings not listed in Section 4, include manufacturer drawings and brochures that clearly indicate size, dimensions, weights, performance standards, etc. If this documentation is omitted, the brass fittings may be rejected at the sole option of the City. Certification for the aforementioned standards must be available if requested by the City of Tampa.

4. MANUFACTURER

The brass fittings shall be domestically manufactured by Mueller Company, Ford Meter Box Company, A.Y. McDonald Mfg. Company, or approved equal.

SERVICE SADDLES

1. GENERAL

All service saddles shall be used for tapping water distribution pipes to provide a drip-tight connection to the main for customers' water meters. Service saddles shall incorporate a wrap-around type body, straps, gasket and bolts. When installed, the body shall wrap around the main for a minimum of 160 degrees.

2. PRODUCTS

a. Service saddle for pipe less than 3 inches shall be single band which is hinged or split from the saddle body and is anchored by bolting one or more bolts between the band and saddle body, or a double strap design anchored by four bolts.

b. Service saddles for pipe equal to or greater than 3 inches shall use a double-wide single flexible band or a double strap with a minimum of a four bolt pattern anchoring. These service saddles shall provide for a variable range in diameter per nominal size of pipe, yet shall fit the stated diameter for the nominal size pipe noted.

c. Service saddles shall be constructed from bronze, ductile iron in accordance with ASTM A536, or stainless steel and shall seal to the distribution pipe by an EPDM rubber gasket. The gasket shall maintain a resilient seal without cracking or becoming brittle during the working life of the service saddle. All service saddles shall have corporation tap threads.

d. Threads shall be AWWA CC in accordance with AWWA C-800.

e. Gasket shall be of self-sealing design.

f. Service saddle bodies shall be protected with a heavy coating of corrosion resistant, metal primer.

g. Saddle assembly should be capable of pressure up to 150 psi without rupture and failure.

h. Straps and bolts shall be carbon steel confirming to ASTM A108, electro-galvanized with dichromate seal.

3. QUALITY CONTROL AND TESTING

When submitting for approval of a service saddle not listed in Section 4, include manufacturer drawings and brochures that clearly indicate size, dimensions, weights, performance standards, etc. If this documentation is omitted, the service saddle may be rejected at the sole option of the City.

4. MANUFACTURER

Service saddles shall be as follows:

2-inch or less:

2" PVC (OD 2.375), 2" McWane enamel CI (OD2.50"), or 2.25" McWane enamel CI (OD 2.75"):

Clow 3401; Ford S70/S90; JCM 402/403/405 (DI);
Jones J-995; Rockwell 313/317
Mueller H-13420/H-10475/H-10476;

3-inch or greater:

3" pipe (OD 3.80), 4" pipe (OD 4.80"), 6" pipe (OD 6.9"), 8" pipe (OD 9.05"), 10" pipe (OD 11.1"), 12" pipe (OD 13.2"):

Cascade C-522/CD52/CB52/CN52; Ford FS- or FC-202 series;
JCM 406 cortin strap (for PVC); Mueller H-105XX series;
Rockwell 313 (DI) /317/323; Clow 3408/3410;
JCM 402 cortin strap (for DIP).

or approved equal.

BLOW-OFF ASSEMBLY

1. GENERAL

Blow-off assembly shall be used to remove sediments and stagnant water from non-looping or "dead-end" water lines.

2. PRODUCT

a. Either ball-valve or plunger-valve assemblies are acceptable blow-off assemblies.

b. Blow-off assemblies shall fit in a Tampa Water Department valve box.

c. Blow-off riser shall be 2-inch seamless brass pipe, or Schedule 80 PVC. Seamless brass pipe suitable for use in water service lines and plumbing shall be in conformance with ANSI/AWWA C-800 Standards for Service

Lines, latest revision. Schedule 80 PVC riser pipe and fittings suitable for use in water service lines and plumbing shall be in conformance with ANSI/AWWA C605, ASTM D1785, ASTM D2241, ASTM D2247 and ASTM D2467, latest revisions.

d. The outlet shall have 2½-inch fire hydrant threads and a hydrant cap.

e. BALL-VALVE TYPE ASSEMBLY

(1) A non-draining, ¼-turn, right-hand opening, brass ball-valve shall be accessible within the blow-off assembly valve box. All working parts shall be of bronze-to-bronze.

(2) Blow-off assembly inlets shall have threaded male connections for tapped plugs or caps. Blow-off assemblies shall be mounted to the inlet with a brass compression joint or a 90° bend. Brass fittings shall be in compliance with ANSI/AWWA C-800 Underground Service Line Valves and Fittings.

f. PLUNGER-TYPE ASSEMBLY

(1) Blow-off assembly shall have a 2" x 2" CC male-threaded brass corporation stop for a tapped cap or plug.

(2) Turning a top mounted 9/16" operating nut to the right shall operate the blow-off assembly.

(3) All internal working parts, the inlet, and the outlet shall be low-lead brass. All wear parts (o-rings and valve seat) shall be of commonly available dimensions and materials and none may be vendor-unique design.

(4) Blow-off riser shall be 2-inch seamless brass pipe with a 2-inch brass elbow.

3. QUALITY CONTROL AND TESTING

When submitting for approval of a blow-off assembly not listed in Section 4, include manufacturer drawings and brochures that clearly indicate size, dimensions, weights, performance standards, etc. If this documentation is omitted, the blow-off assembly may be rejected at the sole option of the City.

4. MANUFACTURER

a. Ball-valve blow-off assemblies shall be the following:
Kupferle Foundry Co., St. Louis, MO. "Mainguard No. 79 Eclipse Blow-Off Hydrant"; Water Plus Corporation, Pensacola, FL. "The Hydrant Plus Blow-

Off Assembly VB2000B", or approved equal.

b. Plunger-valve opening blow-off assemblies shall be the following: Kupferle Foundry Co., St. Louis, MO. "Truflo Model #TF550", or approved equal.

AIR RELEASE VALVES
(Compound Lever Type)

1. GENERAL

Air Release Valves shall be manufactured in accordance with AWWA C-512 latest revision, and shall adhere to the following specification.

2. PRODUCT

The air release valve shall be of the float operated, compound leverage type, and capable of automatically releasing accumulated air from a fluid system while that system is in operation and under pressure.

To assure drip tight shut off, a viton or buna-n orifice button shall be used to seal the valve discharge orifice. The orifice diameter must be sized for use within a given operation pressure range to insure maximum discharge capacity.

Air release valves shall be provided with a vacuum check to prevent air from re-entering the system on negative pressure.

All internal trim metal subject to wetting shall be stainless steel. The float shall be of stainless steel construction and capable of withstanding a pressure of 1,000 p.s.i.

3. QUALITY CONTROL AND TESTING

When submitting for approval of air release valves not listed in Section 4, include manufacturer drawings and brochures that clearly indicate size, dimensions, weights, performance standards, etc. If this documentation is omitted, the air release valve may be rejected at the sole option of the City.

4. MANUFACTURER

Air release valves shall be the following: Val-Matic Valve and Manufacturing Corp. "Model No. 38VC"; APCO "Model 200, with vacuum check", or approved equal.

POLYVINYL CHLORIDE (PVC) PRESSURE WATER PIPE

(4” through 8”)

1. GENERAL

All PVC pressure pipe shall be manufactured in accordance with AWWA Standard C-900, latest revision.

2. PRODUCT

a. Pipe - PVC pipe, 4" through 8", shall be DR-18 pressure class 150 with ductile iron pipe equivalent ODs. The pipe shall be approved by the National Sanitation Foundation for use as a potable water main. The pipe color shall be blue and the nominal laying length per pipe section shall be 20 ft.

b. Joints - Joints shall be "push-on" and shall be made by joining pipe spigot end and integral wall-thickened bell end. All joints shall meet all requirements of ASTM Standard D3139. Each bell shall be an integral-wall section joint assembly using elastomeric-gasket seals. All gaskets shall meet all requirements for performance as specified by ASTM F-477.

c. Restraint Fittings - Joint restraint shall be with systems designed for mechanical or push-on joint restraint of PVC pipes, such as the Megalug 2000PV and Uniflange 1300 for PVC ductile iron mechanical joints, and the Uniflange 1350 and Megalug 1600 for PVC push-on joints, or approved equals. Restraining devices shall meet or exceed all requirements of ASTM F1674 “Standard Test Method for Joint Restraint Products for Use with PVC Pipe”.

d. Service Taps - All service taps on PVC mains shall require a service saddle, manufactured specifically for PVC pipe, equal to or better than Ford FS- or FC-202, or JCM 406. The cutting tool shall be a shell type for PVC pipe (hole) cutter with internal teeth or double slots and be designed to accommodate AWWA C-900 pipe (twist drill bits and auger bits shall be prohibited). The saddles used should provide full support around the circumference of the pipe and provide a bearing area of sufficient width along the axis of the pipe (2” minimum), insuring that the pipe will not be distorted when the saddle is tightened.

3. QUALITY CONTROL AND TESTING

All pipe shall meet or exceed all hydrostatic, performance and acceptance tests as set forth in AWWA C-900, latest revision.
Prior to shipment of the pipe to the project site, the Contractor shall submit to the Engineer, test reports and certifications as described below duly certified by the manufacturer's testing facility or an independent certified testing laboratory demonstrating full compliance with AWWA C-900. Certification from the supplier is not acceptable.

An original plus four (4) copies of the following shall be submitted to the Engineer:

1. Name, address, and phone number of the pipe manufacturer and the location of the plant at which they will be manufactured.

2. Notarized certificates of conformance that each lot of pipe has been manufactured, sampled, and tested per AWWA C-900. The City shall be provided in writing the means to cross-reference the markings with the certification and test reports (i.e. date of manufacturer, a lot number and shift number etc.) If this information is marked on the pipe in a code, the markings shall be decoded in writing.

4. MANUFACTURER

All PVC shall be manufactured domestically.

POLYETHYLENE ENCASEMENT

1. GENERAL

Polyethylene encasement shall conform to the requirements of ANSI/AWWA C-105/A21.5 Method A and shall be 8 mil thick. Polyethylene casing shall be installed on all buried ductile iron pipe, fittings, valves, and appurtenances where shown on the drawings or as directed by the Water Department as dictated by field conditions.

2. PRODUCT

The raw material used to manufacture polyethylene encasement shall be Type 1, Class A Grade E-1 in accordance with ASTM D-1248

The polyethylene encasement shall meet the following test requirements:

Tensile Strength	1200 PSI minimum
Elongation	300% minimum
Dielectric Strength	800 V/Mil Thickness minimum
Thickness 0.008"	(8 mils) minimum nominal with minus tolerance not exceeding 10% of nominal
Melt Index	0.4 maximum

3. QUALITY CONTROL AND TESTING

When submitting for approval polyethylene not listed in Section 4, manufacturer shall include drawings and brochures that clearly indicate size, dimensions, weights, performance standards, etc. If this documentation is omitted, the polyethylene may

be rejected at the sole option of the City.

4. MANUFACTURER

All polyethylene encasement shall be of domestic manufacture.

HIGH DENSITY POLYETHYLENE (HDPE) WATER METER BOX & COVER

1. GENERAL

HDPE water meter boxes shall be manufactured in accordance with these specifications.

Meter box covers ("Covers") provided under this specification shall be precast polymer concrete or ductile iron with hinged reading lids where specified. Covers provided shall be designed to withstand light or heavy traffic loading as specified herein.

2. PRODUCT

a. (1) The HDPE meter box shall be 100% homogenous high-density Polyethylene of one piece molded construction for durability, with dimensions as shown in the referenced drawings. The meter box must have a minimum wall thickness of .550 inches with wall core interior area of rigid foam construction offering insulation and tensile strength. The box shall be tested to withstand a freestanding 20,000 lb. vertical load and a sidewall loading of 180 pounds per square inch. All edges shall be clean and smooth for safety during handling. Exterior wall shall be of smooth finish, black in color and have ultraviolet degradation protection properties for above ground storage. Interior wall shall be smooth finish and white in color facilitating illumination of interior area. The meter box shall have a top flange encircling the top cover and below the cover seat to retard "push down" when set in pavement and an anti-settling flange on the bottom.

(2) All standard precast polymer concrete covers shall be designed to meet the requirements for AASHTO Incidental Traffic H-10 loading. All extra-heavy covers shall be manufactured as stated above and shall be designed to meet the requirements for AASHTO Full Traffic H-20 loading.

All standard ductile iron meter box covers shall be manufactured to meet or exceed ASTM A-536 Grade 65-45-72, latest revision and shall be designed to meet the requirements for AASHTO Incidental Traffic H-10 loading. All extra-heavy covers shall meet the requirements for

AASHTO Full Traffic H-20 loading.

b. Standard meter box covers shall include hinged reading lids as specified on Standard Dimension Details "Meter Box Covers". Extra-heavy covers shall be solid with no reading lid.

c. Meter boxes shall be dimensioned to accommodate meter box covers as specified.

All reading lids under this specification shall be supplied with a slot for engaging a raising hook to permit reading the enclosed water meter without removing the box cover. Reading lids are to be made of ductile iron. The reading lids shall be hinged and secured in place by a suitable stainless steel (Type 304) hinge pin.

d. Ductile iron reading lids shall be manufactured in accordance with ASTM A536 Grade 65-45-12, latest edition.

e. Polymer concrete for precast polymer concrete covers shall consist of a mix of polymer resin, course sand and fine sand, and shall be reinforced with layers of woven fiberglass to withstand traffic loadings as specified. Polymer concrete shall have a minimum compressive strength of 12,000 psi.

f. All ductile iron covers must be certified by the ductile iron manufacturer as well as by an independent testing laboratory. All ductile iron covers shall exceed Federal Specifications RC-F-621D. All ductile iron covers shall have a minimum compressive strength of 25,000 lbs. on a 9-inch square load area.

g. All covers under this specification shall be sized to fit the appropriate Brooks Products, Inc., Orlando, Florida concrete meter boxes, numbers 36, 37, 66 and Dual H.

h. All covers shall have UL/FM Approvals.

3. QUALITY CONTROL AND TESTING

a. The bidder shall furnish engineering performance data at the time the bids are opened for each size meter box and cover bid. Such data shall contain but may not be limited to: 7-day and 28-day concrete compression tests, sieve analysis of aggregates, water/cement ratio and curing process, and any other applicable tests as required.

b. The bidder shall furnish two sets of shop drawings at the time bids are opened, for boxes and covers which differ from the standards. The shop drawings shall note the dimension, thickness and tolerances to allow

review of material.

After opening the bids, the Water Department may request one or more of the bidders to furnish a sample of each type of meter box and cover bid. This sample shall be returned at the bidder's expense after the contract is awarded. Failure to submit samples, if requested, may result in the rejection of the bid.

c. All covers must offer a minimum of a full 10-year warranty against defects, breakage, etc., under normal use conditions.

4. MANUFACTURER

Meter boxes provided shall be equal to or better than Mid States Plastics, Mount Sterling, KY, MSBCF Style, HDPE meter boxes.

All polymer concrete covers shall be equal to or better than CDR Systems Corporation or Brooks Products Polycrete Meter Box Covers.

All ductile iron covers shall be equal to or better than EBAA Iron Ductile Iron Lid or approved equal.

All covers shall be domestically manufactured.

VAULT SLABS AND COVERS

1. GENERAL

Vault slabs and covers shall adhere to all specifications stated herein.

2. PRODUCT

Vault slabs shall be constructed of reinforced concrete or reinforced polymer concrete. Vault slabs shall be dimensioned as shown in Department Standard Detail “Vault Concrete Slab Detail”.

a. Concrete Vault Slabs

(1) The concrete shall consist of a uniform mix of Portland cement, sand, and gravel. The mix shall provide a dense concrete with a minimum compressive strength of 4,500 psi in 28 days. The gravel shall be a clean, physically sound, high density, well graded, washed pea gravel with a maximum size of ½-inch. The sand shall be sharp, clean and well graded. All material used in mixing concrete shall meet Florida Department of Transportation specifications. The water/cement ratio shall be not in excess of 0.45 and the slump shall be kept to a minimum

of 3 inches and a maximum of 4 inches. The top surface of all slabs shall be a broom finish.

(2) All concrete vault slabs shall be reinforced with rebar through out the slab with welded wire fabric around the lift loop depressions. The rebar shall be Grade 60, No. 6 in all top slabs and Grade 60, No. 4 in all bottom slabs. All lift loops shall be Grade 60, No. 4 rebar and shall be dimensioned as shown in construction standard entitled "Lift Loop." All lift loop depressions shall be centered in a 9-hole square pattern of 6" x 6" welded wire fabric.

b. Reinforced Polymer Concrete Vault Slabs

The polymer concrete shall consist of a mix of polymer resin, course sand, fine sand and shall be reinforced with layers of woven fiberglass to withstand a minimum of a H-10 loading. Polymer concrete shall have a minimum compressive strength of 12,000 psi. Thickness of polymer concrete vault slabs may be less than shown in the Tampa Water Department Standard Detail, Vault Concrete Slab Detail provided the minimum H-10 loading requirements are met. Polymer concrete vault slabs shall be provided with Lift Loops as described in 2., a., (2) of this specification and as shown in the Standard Detail.

c. Vault Covers

Top vault slabs shall be provided with a reinforced polymer concrete vault cover ("Vault Cover"). Vault cover frames in concrete vault slabs shall be fabricated of steel, cast flush into the top surface of the top vault slab, and dimensioned as shown in the above referenced Standard Detail. Vault covers shall be reinforced polymer concrete as specified in 2 b. above, dimensioned as shown in the Standard Detail. Vault covers shall be bolt down with ½-inch penta-head corrosion resistant bolts and shall not exceed 150 lbs. in weight. Each vault cover shall have the City embossed seal as shown in the above referenced Standard Detail. Vault covers shall be provided with ¾" x 2" lifting holes with lift loops for engaging a raising hook to remove the vault cover.

3. QUALITY CONTROL AND TESTING

a. When submitting for approval of a vault slab and/or cover not listed in Section 4, manufacturer shall include drawings and brochures that clearly indicate size, dimensions, weights, performance standards, etc.. If this documentation is omitted, the vault slab and/or cover may be rejected at the sole option of the City.

b. The Developer shall submit manufacturer's certification of loading limits of Vault Slabs and Covers to be provided under this contract.

4. MANUFACTURER

a. Reinforced polymer concrete vault slabs shall be CDR Systems WP series or equal.

b. Reinforced polymer concrete vault covers shall be CDR Systems C-10-3048-03W or equal.

PRE-CAST THRUST BLOCKS

1. GENERAL

Concrete precast thrust blocks shall be manufactured to the dimensions shown with the Standard Detail "Precast Concrete Thrust Blocks".

2. PRODUCT

The concrete for thrust blocks shall consist of a uniform mix of Portland cement, sand and gravel. The mix shall be proportioned and shall provide a dense concrete with a minimum compressive strength of 3,000 psi in 28 days. All material used in mixing concrete shall meet Florida Department of Transportation specifications.

3. QUALITY CONTROL AND TESTING

When submitting for approval precast concrete thrust blocks for approval include drawings and brochures that clearly indicate size, dimensions, weights, performance standards, etc. If this documentation is omitted, the precast concrete thrust block may be rejected at the sole option of the City.

4. MANUFACTURER

Not Specified.

APPENDIX B

TAMPA WATER DEPARTMENT STANDARD DETAILS

TAMPA WATER DEPARTMENT
STANDARD DETAIL LIST FY02

Typical Trenching, Bedding and Backfill for Paved Areas 2.01
Typical Trenching, Bedding and Backfill for Non-Paved Areas 2.02
Jacking and Boring for Pavement Crossing 2.03
Jacking and Boring for Railroad Crossing 2.04
Installation of Polyethylene Encasement 2.05
Reinforced Concrete Shock Pad 2.06
Thrust Blocks for Bends 2.07
Thrust Blocks for Plugs 2.08
Thrust Blocks for Tees and Taps 2.09
Precast Concrete Thrust Block 2.10
Restrained Joint Standard for Bends, Plugs and Caps 2.11
Restrained Joint Standard for Tees and Reducers 2.12
Tapped Connection for 2" - 2½" Water Mains 2.13
Sub-surface Air Release Valve 2.14
2" Blow-off Ball-Valve Assembly 2.15
2"Blow-off Plunger-Valve Assembly 2.16
Temporary Sample Tap Installation 2.17
Temporary Sample Tap Installation for End of Line 2.18
Pipe Identification 2.19
Typical Gate Valve, Valve Box and Pad Installation..... 3.01
Typical Butterfly Valve, Valve Box and Pad Installation 3.02
Valve Box 3.03
Typical Fire Hydrant Installation 4.01
Fire Hydrant Lead Methods of Installation.....4.02
Tapping Details for ¾", 1", 1½" and 2" Corporation Stop 5.01
Single Meter Set for ¾", 1", 1½" and 2" 5.02
Dual Meter Set for ¾" and 1" 5.03
Single and Dual Metered Service/Short Side ¾", 1", 1½" and 2" 5.04
Single and Dual Metered Service/Long Side ¾", 1", 1½" and 2" 5.05
2" Detector Check Valve Assembly in Meter Box 5.09
¾" or 1" Single Service Meter Box 5.10
¾" or 1" Dual Service Meter Box 5.11
1½" and 2" Single Service Meter Box 5.12
Above Ground Turbine Meter with Strainers 6.01
Above Ground Double Detector Check Valve Assembly 6.02
Pipe Supports 6.03
Turbine Meter in Vault 6.04
Double Detector Check Valve Assembly in Vault 6.05
Double Detector Check Valve Assembly and 3" or Larger
Domestic Meters in Vault 6.06
Vault Construction 6.07
Vault Concrete Slab 6.08
Turbine Meter with Strainers in Above Ground Vault 6.09

Double Detector Check Valve Assembly in Above Ground Vault.....6.10

Fire Line Service and 3" or Larger Domestic Meters in
Above Ground Vault 6.11
Above Ground Vault Cross-Section 6.12
2" By-pass Line 6.13
Pipe Bedding and Trench for Plastic Pipe.....7.01
Valve Setting on Plastic Pipe 7.02
Double Copper Tracer Wire on PVC Pipe 7.03

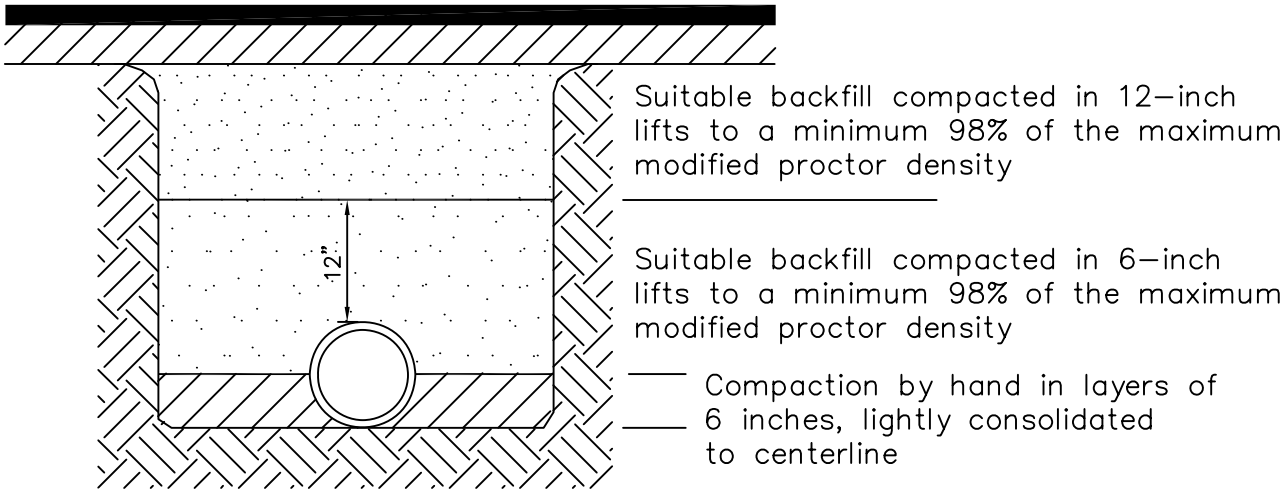

NOTES:

1. Type 2 trench is defined as a flat-bottom trench. Lightly consolidate backfill to centerline of pipe.
2. This standard shall be utilized in the absence of specific standards. The standard of the agency controlling the Right-of-Way shall govern unless otherwise directed by the Engineer.
3. Suitable backfill shall be defined as material free from cinders, ashes, refuse, clay, organic matter, boulders, rocks or stones, or other material that in the opinion of the Engineer is unsuitable.

TAMPA WATER DEPARTMENT	APPROVED	REVISED	TYPICAL TRENCHING, BEDDING AND BACKFILL DETAIL FOR PAVED AREAS	2.01

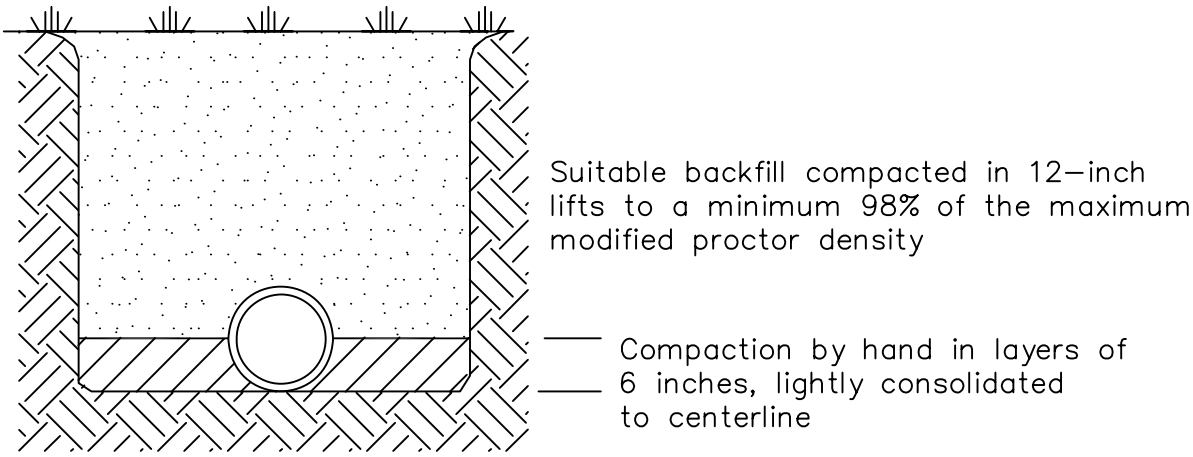

NOTES:

1. Type 2 trench is defined as a flat-bottom trench. Lightly consolidate backfill to centerline of pipe.
2. This standard shall be utilized in the absence of specific standards. The standard of the agency controlling the Right-of-Way shall govern unless otherwise directed by the Engineer.
3. Suitable backfill shall be defined as material free from cinders, ashes, refuse, clay, organic matter, boulders, rocks or stones, or other material that in the opinion of the Engineer is unsuitable.

TAMPA WATER DEPARTMENT	APPROVED	REVISED	TYPICAL TRENCHING,BEDDING AND BACKFILL DETAIL FOR NON-PAVED AREAS	2.02

K:\Standard Details 02\203

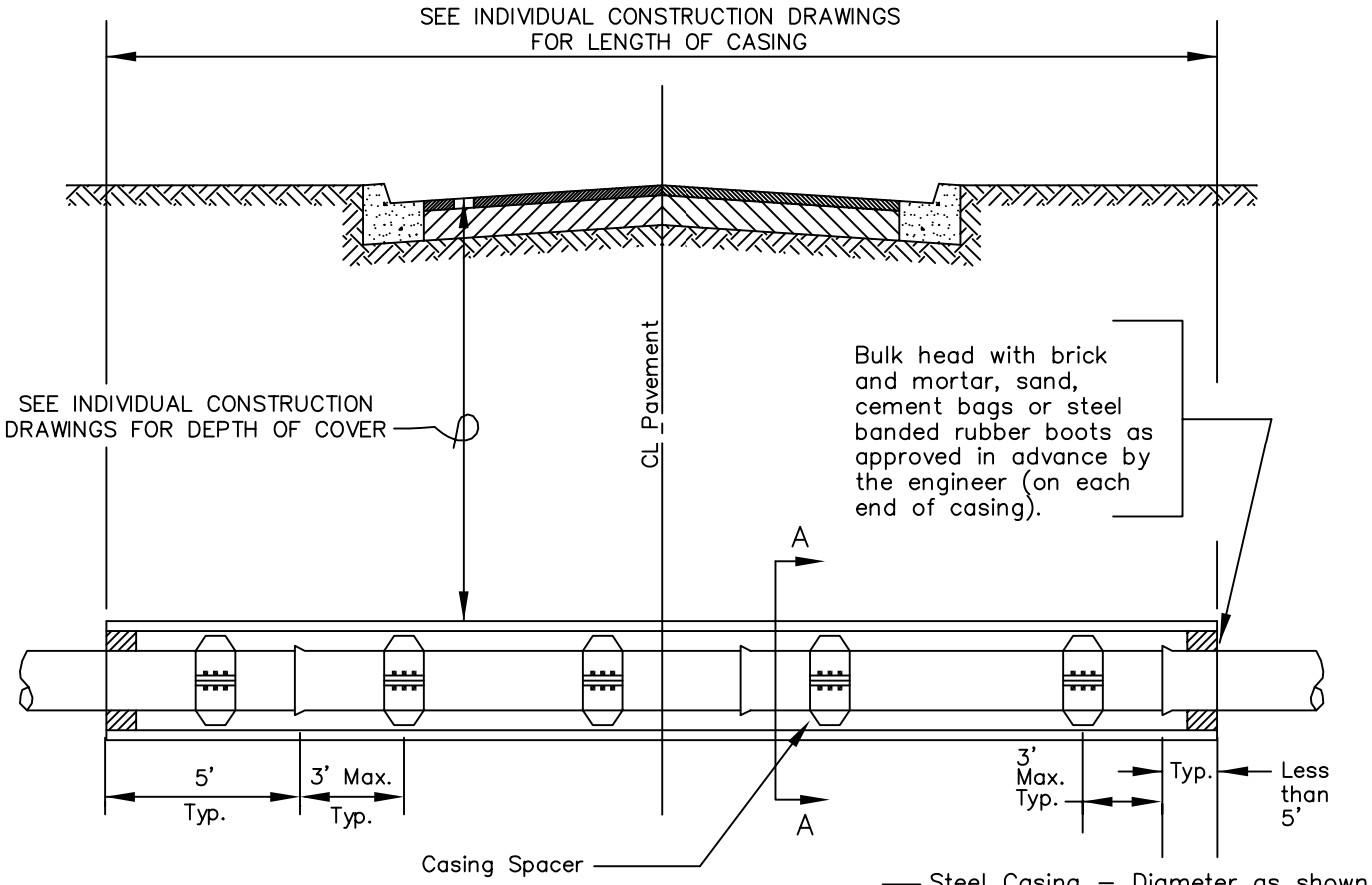

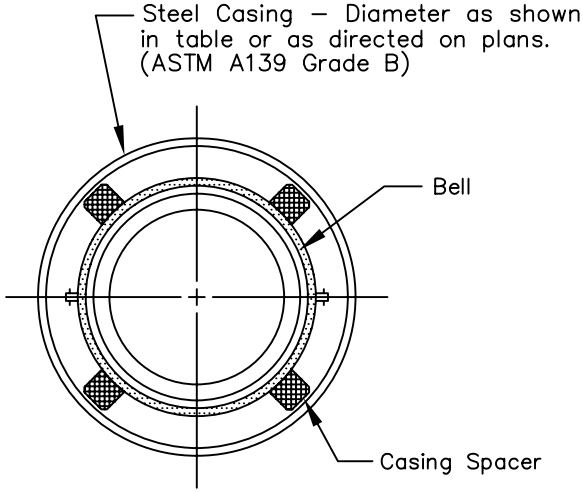

SECTION A – A

D.I.P. Carrier Pipe (P.O.) Nominal Diameter (Inches)	Casing O.D. (Inches)	Thickness
2	4	1/4"(.250)
4	12	1/4"(.250)
6	14	9/32"(.28125)
8	16	9/32"(.28125)
12	20	11/32"(.34375)
16	24	13/32"(.40625)
20	30	15/32"(.46875)
24	36	17/32"(.53125)
30	42	9/16"(.5625)
36	48	9/16"(.5625)

NOTES:
1. Pipelines with bends less than 20' from casing entrance shall be secured by both retainer glands and thrust blocks.
2. Casing pipe sizes listed are for push–on joint carrier pipe only.
3. Two spacers per joint minimum spaced as shown or as directed by the Engineer.

TAMPA WATER DEPARTMENT	APPROVED	REVISED	JACKING & BORING FOR PAVEMENT CROSSING	2.03

K:\Standard Details 02\204

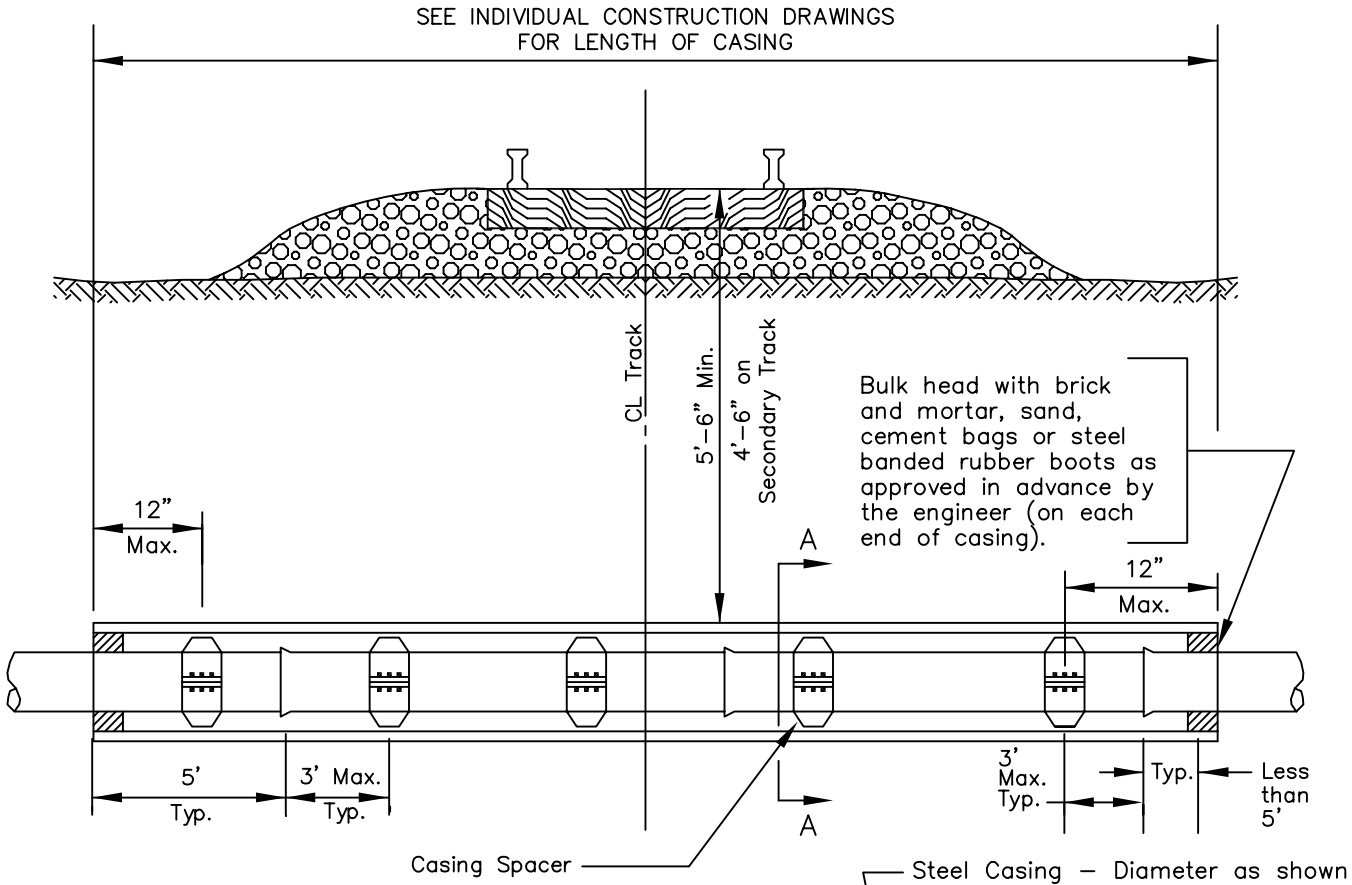

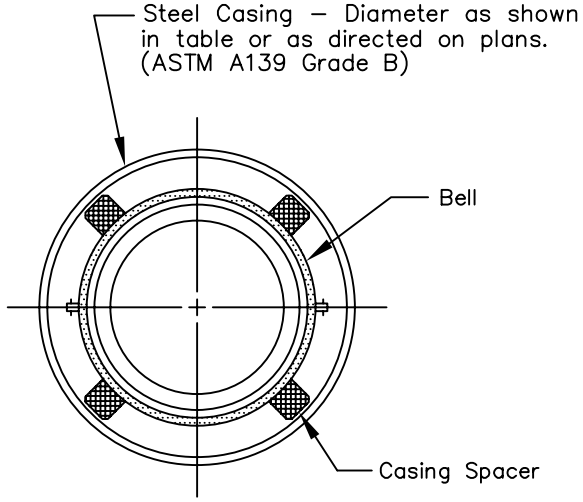

SECTION A – A

D.I.P. Carrier Pipe (P.O.) Nominal Diameter (Inches)	Casing O.D. (Inches)	Thickness
2	4	1/4"(.250)
4	12	1/4"(.250)
6	14	9/32"(.28125)
8	16	9/32"(.28125)
12	20	11/32"(.34375)
16	24	13/32"(.40625)
20	30	15/32"(.46875)
24	36	17/32"(.53125)
30	42	5/8"(.625)
36	48	11/16"(.688)

NOTES:
1. Pipelines with bends less than 20' from casing entrance shall be secured by both retainer glands and thrust blocks.
2. Casing pipe sizes listed are for push–on joint carrier pipe only.
3. Two spacers per joint minimum spaced as shown or as directed by the Engineer.

TAMPA WATER DEPARTMENT	APPROVED	REVISED	JACKING & BORING FOR RAILROAD CROSSINGS	2.04

METHOD A

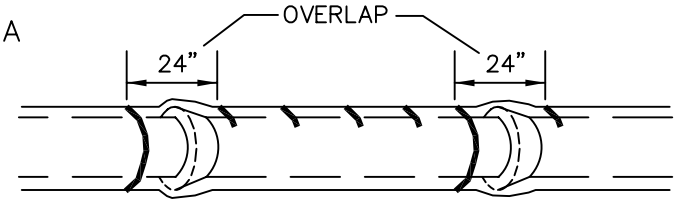

Polyethylene tube is cut into lengths approximately two feet longer than the pipe section and placed around it. After the pipe joint is assembled, the polyethylene tube is made to overlap the joint and the overlap secured in place. Since the tube is considerably larger than the barrel of pipe, it is made to fit snugly by folding over at the top and securing at quarter points along the pipe section.

METHOD B

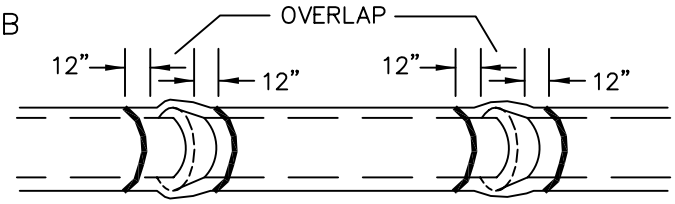

Polyethylene tube is cut one foot shorter than the length of the pipe section. After placement of the pipe, it is folded and secured snugly overall. A three foot length of polyethylene tube placed over the end of the preceeding section is then pulled in place over the joint after assembly and secured.

METHOD C

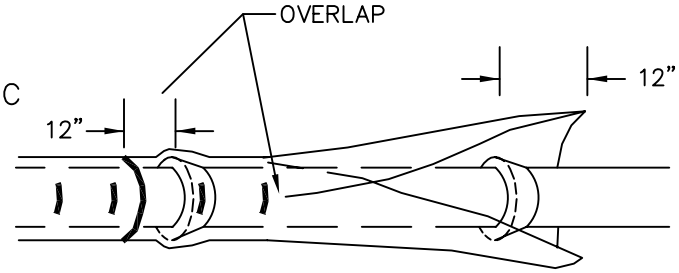

Polyethylene sheet is cut to a length two feet longer than the pipe section. The sheet is wrapped around the pipe so that it overlaps circumferentially over the top quadrant of the pipe, then secured. After joint assembly, the surplus length of polyethylene film is secured around the joint, providing an overlap of each joint. Tape at each joint or at 3' intervals in between.

NOTES: 1. Use blue polyethylene film and tape only.
2. Polyethylene film shall be a minimum of 8 mil. thickness.

TAMPA WATER DEPARTMENT	APPROVED	REVISED	INSTALLATION OF POLYETHYLENE ENCASEMENT DETAIL	2.05

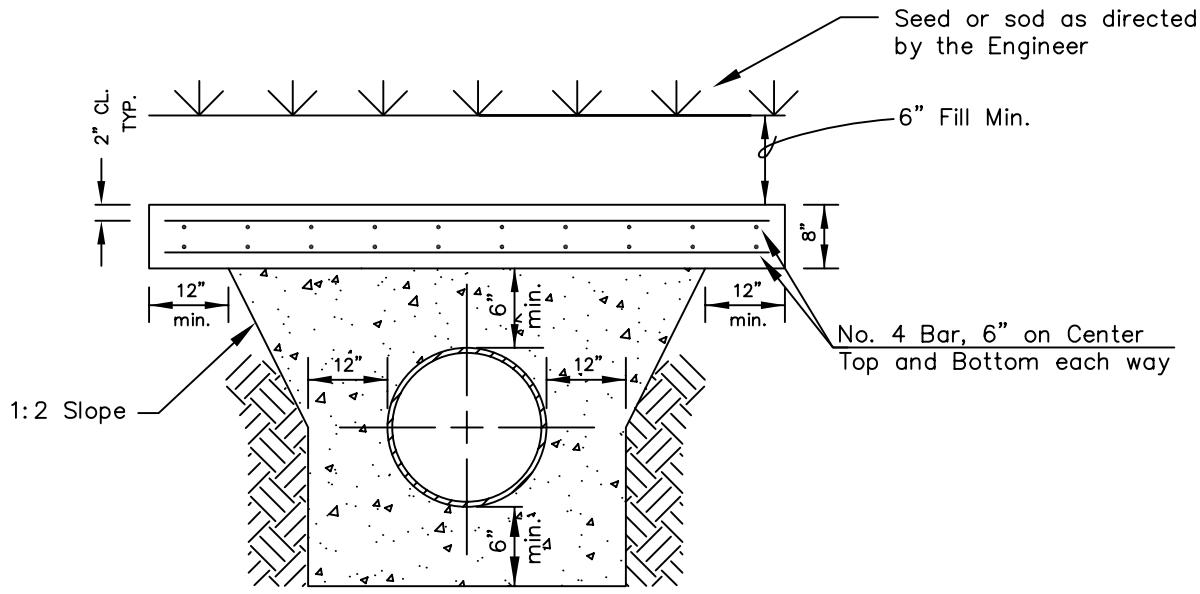

GRASSED SECTION

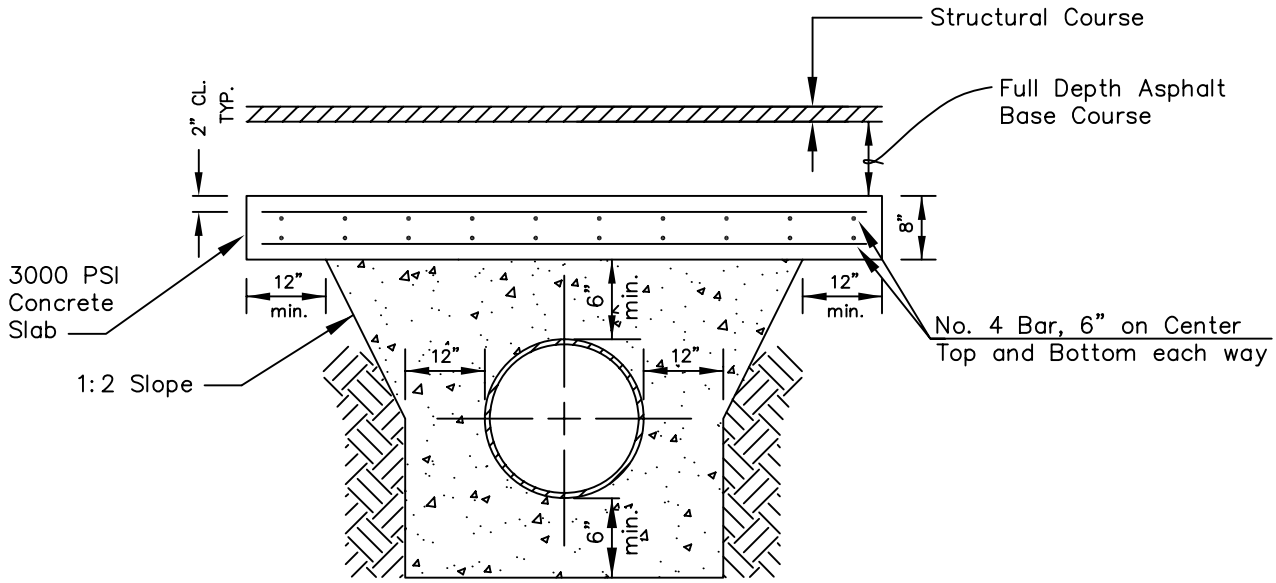

ROADWAY SECTION

NOTES:

1. Structural course and base course requirement shall be established by the agency having jurisdiction.
2. Shock pads for mains too shallow for the above configuration shall be designed on a case–by–case basis.

TAMPA WATER DEPARTMENT	APPROVED	REVISED	REINFORCED CONCRETE SHOCK PAD (FOR COVER LESS THAN 2.5')	2.06

K:\Standard Details 02\207

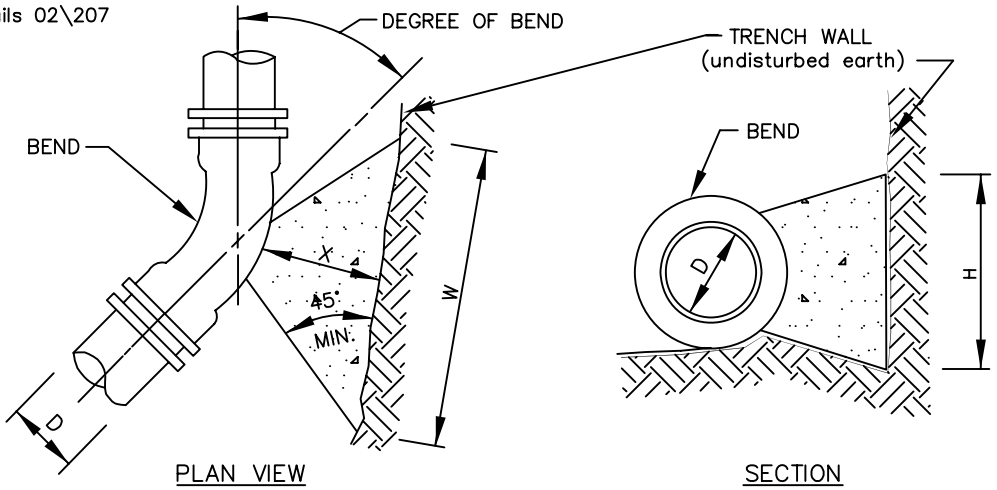

DIMENSIONS OF THRUST BLOCKS FOR GOOD SOIL

	SIZE (D)	4"	6"	8"	12"	16"	20"	24"
11-1/4° BEND	THRUST (lbs.)	674	1393	2396	5097	8857	13,649	19,472
	BEARING AREA (ft.^{2})	0.51	1.05	1.80	3.83	6.65	10.25	14.63
	CONCRETE (yds.^{3})	0.005	0.015	0.033	0.104	0.239	0.459	0.783
	H (ft.)	0.6	0.8	1.1	1.6	2.1	2.6	3.1
	W (ft.)	0.9	1.3	1.6	2.4	3.2	3.9	4.7
	X (ft.)	0.4 Min.	0.6 Min.	0.8 Min.	1.2 Min.	1.6 Min.	2.0 Min.	2.3 Min.
22-1/2° BEND	THRUST (lbs.)	1342	2772	4769	10,145	17,628	27,166	38,757
	BEARING AREA (ft.^{2})	1.01	2.08	3.58	7.61	13.22	20.37	29.07
	CONCRETE (yds.^{3})	0.012	0.035	0.080	0.252	0.580	1.113	1.792
	H (ft.)	0.8	1.2	1.5	2.3	3.0	3.7	4.4
	W (ft.)	1.2	1.8	2.3	3.4	4.5	5.5	6.6
	X (ft.)	.06 Min.	0.9 Min.	1.2 Min.	1.7 Min.	2.2 Min.	2.8 Min.	3.0 Min.
45° BEND	THRUST (lbs.)	2632	5437	9355	19,901	34,579	53,288	76,024
	BEARING AREA (ft.^{2})	1.97	4.08	7.02	14.93	25.94	39.98	57.04
	CONCRETE (yds.^{3})	0.029	0.087	0.198	0.620	1.387	2.301	3.517
	H (ft.)	1.2	1.7	2.2	3.2	4.2	5.2	6.2
	W (ft.)	1.7	2.5	3.2	4.7	6.2	7.7	9.3
	X (ft.)	0.9 Min.	1.2 Min.	1.6 Min.	2.4 Min.	3.0 Min.	3.0 Min.	3.0 Min.
90° BEND	THRUST (lbs.)	4863	10,047	17,286	36,772	63,894	98,463	140,474
	BEARING AREA (ft.^{2})	3.65	7.53	12.96	27.58	47.91	73.84	105.34
	CONCRETE (yds.^{3})	0.068	0.203	0.459	1.360	2.561	4.250	6.496
	H (ft.)	1.6	2.2	3.0	4.3	5.7	7.0	8.4
	W (ft.)	2.3	3.4	4.4	6.4	8.5	10.5	12.6
	X (ft.)	1.2 Min.	1.7 Min.	2.2 Min.	3.0 Min.	3.0 Min.	3.0 Min.	3.0 Min.

NOTES:
1. Concrete shall be kept at sufficient distance from joint for removal of all joint accessories including bolts.
2. All bearing surfaces to be carried to undisturbed soil.
3. This table shows the minimum size thrust blocks for soil bearing pressure of 2000 psf and an internal pressure of 190 psi. Cover to T.O.P. is 3 feet for 12" and smaller mains; 4 feet for 16" and larger mains.
* 4. Poor and wet soil (silty soils, clay, muck and peat) will require larger thrust blocks.
5. Fittings shall be completely polywrapped prior to pouring thrust blocks.

*WARNING

TAMPA WATER DEPARTMENT	APPROVED	REVISED	THRUST BLOCKS FOR BENDS	2.07

K:\Standard Details 02\208

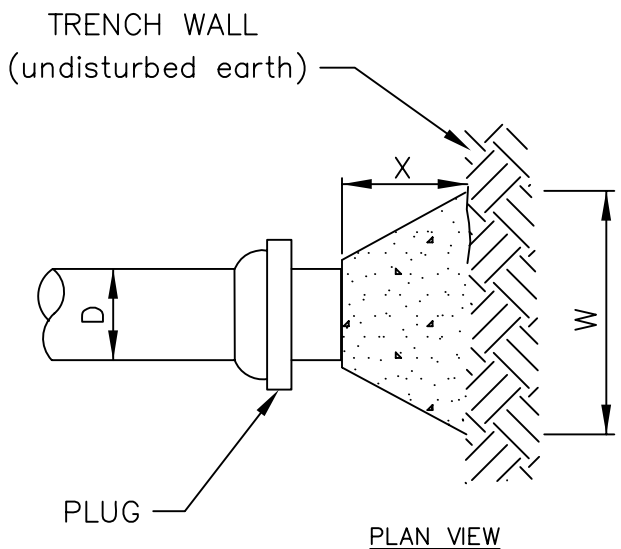

PLAN VIEW

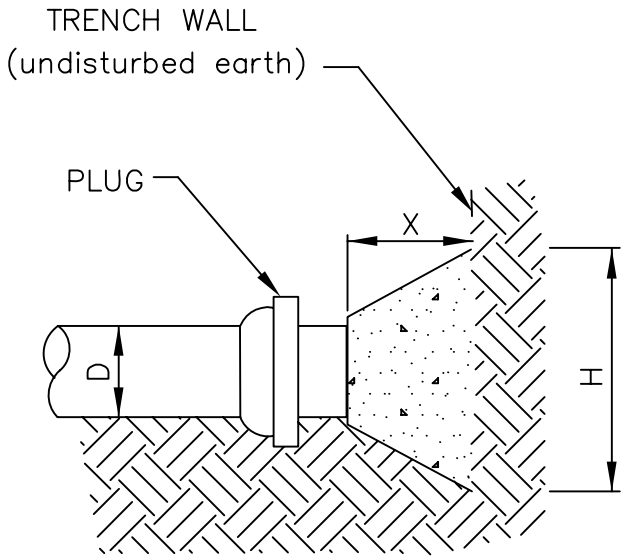

SECTION

DIMENSIONS OF THRUST BLOCKS FOR GOOD SOIL

	SIZE (D)	4"	6"	8"	12"	16"	20"	24"
PLUG	THRUST (lbs.)	3439	7104	12,223	26,002	45,180	69,624	99,330
	BEARING AREA (ft.^{2})	2.58	5.33	9.17	19.50	33.89	52.22	74.50
	CONCRETE (yds.^{3})	0.042	0.126	0.285	0.891	1.811	3.005	4.594
	H (ft.)	1.3	1.9	2.5	3.6	4.8	5.9	7.0
	W (ft.)	2.0	2.8	3.7	5.4	7.1	8.9	10.6
	X (ft.)	1.0 Min.	1.4 Min.	1.9 Min.	2.7 Min.	3.0 Min.	3.0 Min.	3.0 Min.

NOTES:
1. Concrete shall be kept at sufficient distance from joint for removal of all joint accessories including bolts.
2. All bearing surfaces to be carried to undisturbed soil.
3. This table shows the minimum size thrust blocks for soil bearing pressure of 2000 psf and an internal pressure of 190 psi. Cover to T.O.P. is 3 feet for 12" and smaller mains; 4 feet for 16" and larger mains.

*4. Poor and wet soil (silty soils, clay, muck and peat) will require larger thrust blocks.

5. Fittings shall be completely polywrapped prior to pouring thrust blocks.

*WARNING

TAMPA WATER DEPARTMENT	APPROVED	REVISED	THRUST BLOCKS FOR PLUGS	2.08

K:\Standard Details 02\209

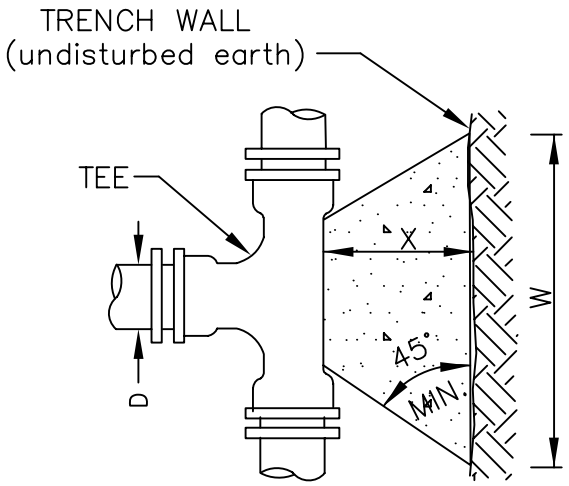

PLAN VIEW

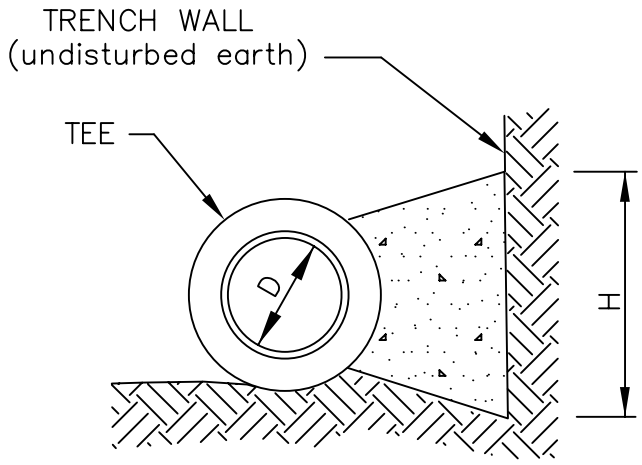

SECTION

DIMENSIONS OF THRUST BLOCKS FOR GOOD SOIL

	SIZE (D)	4"	6"	8"	12"	16"	20"	24"
TEES AND TAPS	THRUST (lbs.)	3439	7104	12,223	26,002	45,180	69,624	99,330
	BEARING AREA ($ft.^2$)	2.58	5.33	9.17	19.50	33.89	52.22	74.50
	CONCRETE ($yds.^3$)	0.042	0.126	0.285	0.891	1.811	3.005	4.594
	H (ft.)	1.3	1.9	2.5	3.6	4.8	5.9	7.0
	W (ft.)	2.0	2.8	3.7	5.4	7.1	8.9	10.6
	X (ft.)	1.0 Min.	1.4 Min.	1.9 Min.	2.7 Min.	3.0 Min.	3.0 Min.	3.0 Min.

NOTES:
1. Size (D), shall be the branch size of tees and taps.
2. Concrete shall be kept at sufficient distance from joint for removal of all joint accessories including bolts.
3. All bearing surfaces to be carried to undisturbed soil.
4. This table shows the minimum size thrust blocks for soil bearing pressure of 2000 psf and an internal pressure of 190 psi. Cover to T.O.P. is 3 feet for 12" and smaller mains; 4 feet for 16" and larger mains.

*5. Poor and wet soil (silty soils, clay, muck and peat) will require larger thrust blocks.

6. Fittings shall be completely polywrapped prior to pouring thrust block.

*WARNING

TAMPA WATER DEPARTMENT	APPROVED	REVISED	THRUST BLOCKS FOR TEES AND TAPS	2.09

K:\Standard Details 02\210

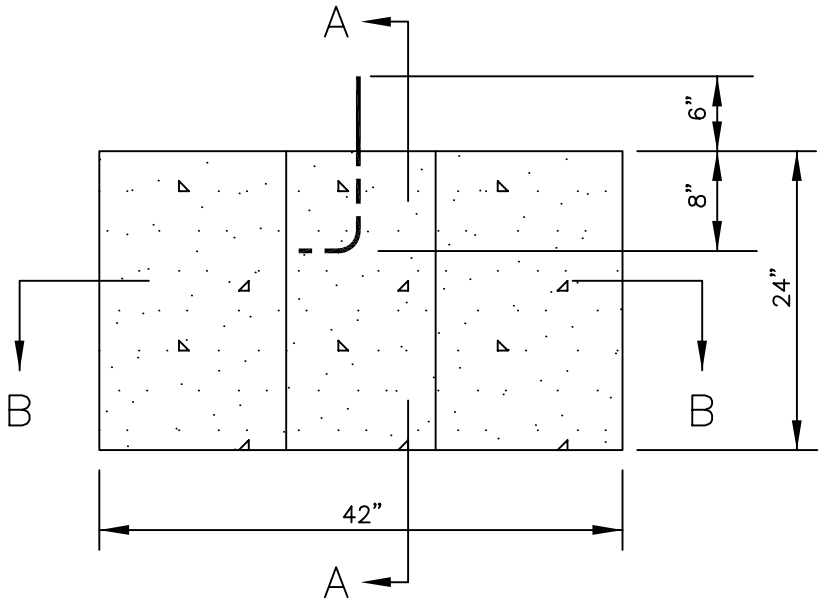

ELEVATION

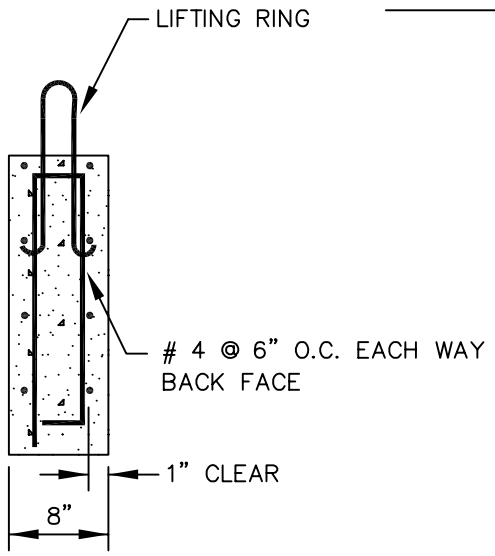

SECTION A–A

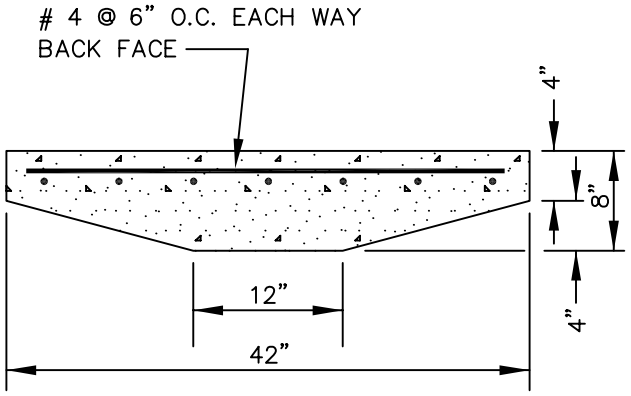

SECTION B – B

Notes:

1. Reinforcing to be standard deformed bar. f'c=3000 psi
2. Precast thrust blocking to be used only on fire hydrants and 8" or smaller fittings, if allowed by the Engineer.
3. A 12"x18" spacer block shall be placed between the precast thrust block and fitting if so directed by the Engineer.

TAMPA WATER DEPARTMENT	APPROVED	REVISED	PRECAST CONCRETE THRUST BLOCK	2.10

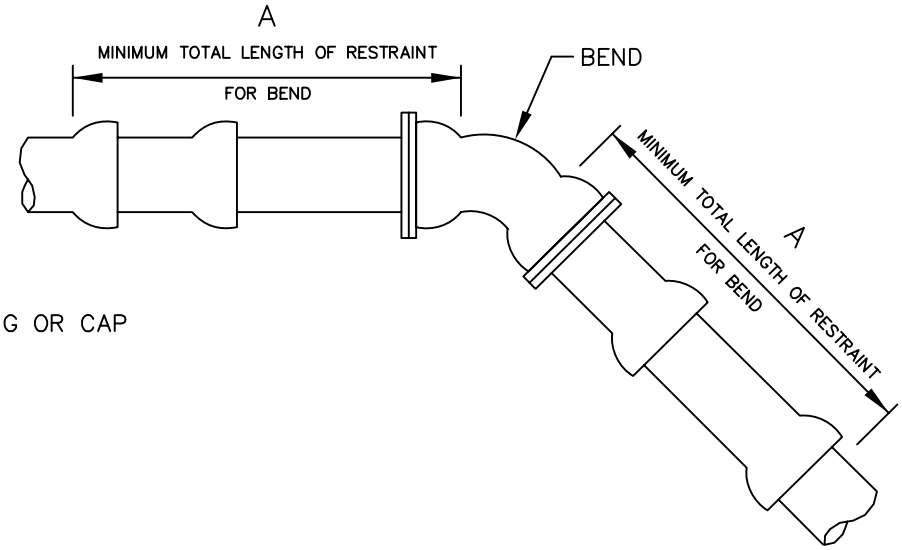

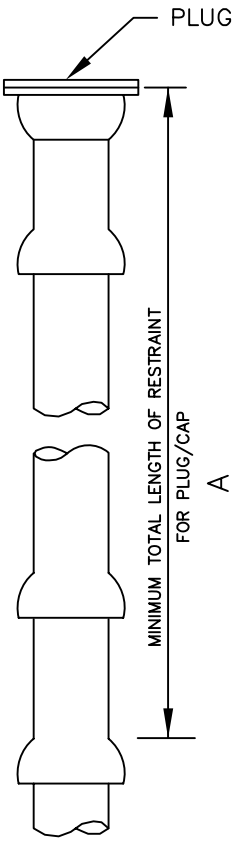

RESTRAIN "A" (LF)									
Fitting	4"	6"	8"	12"	16"	20"	24"	30"	36"
11–1/4°	3	4	6	8	9	10	12	15	17
22–1/2°	6	9	12	16	17	21	25	30	35
45°/Offset	13	18	24	34	36	44	52	62	73
90°	31	44	58	82	87	106	125	151	176
Plug/Cap	55	78	102	143	143	174	204	245	285

A=Minimum footage of pipe to be restrained.

NOTES:

1. This table is based on:
   a) maximum test pressure of 190 psi
   b) laying condition type 2 (see Details 2.01 and 2.02)
   c) poor soil conditions
   d) using D.I.P.
   e) 3 feet of cover for 12" and smaller mains; 4 feet of cover for 16" and larger mains
   f) Horizontal bends only – Engineer to submit calculations for vertical restraints
2. For polywrapped D.I.P., multiply the footage by 1.25
3. For PVC pipe, multiply footage by 1.2.
4. Restrained pipe shall be manufactured restrained pipe, push–on restraints or mechanical joint pipe restrained by Megalug or equivalent.
5. Any additional fittings within the restrained section shall be restrained accordingly.

TAMPA WATER DEPARTMENT	APPROVED	REVISED	RESTRAINED JOINT STANDARD FOR BENDS, PLUGS, AND CAPS	2.11

K:\Standard Details 02\212

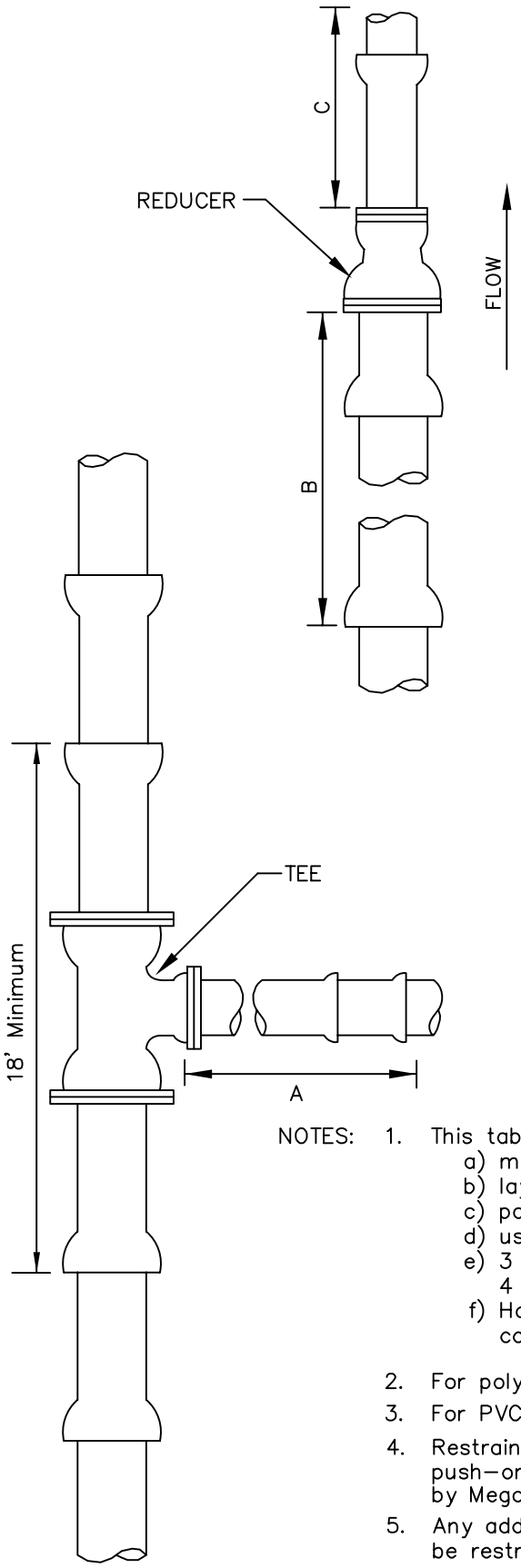

Fitting Size	Restrain (LF) Tee "A"	Restrain (LF) Reducer "B"	Unrestrained Straight Run (LF) Reducer "C"
4x4	25	*	*
6x4	11	40	59
6x6	48	*	*
8x4	A.T.	73	142
8x6	38	43	56
8x8	72	*	*
12x4	A.T.	124	364
12x6	19	104	208
12x8	57	76	115
12x12	114	*	*
16x6	A.T.	121	321
16x8	27	104	212
16x12	77	61	82
16x16	118	*	*
20x6	A.T.	156	527
20x8	14	144	369
20x12	68	109	186
20x16	111	61	77
20x20	149	*	*
24x6	A.T.	189	777
24x8	A.T.	179	560
24x12	59	150	313
24x16	104	111	172
24x20	144	61	74
24x24	179	*	*
30x6	A.T.	234	1227
30x8	A.T.	226	904
30x12	45	204	542
30x16	94	173	341
30x20	135	134	208
30x24	172	86	110
30x30	220	*	*
36x6	A.T.	276	1784
36x8	A.T.	269	1328
36x12	30	251	824
36x16	83	226	551
36x20	127	195	373
36x24	165	156	245
36x30	215	86	106
36x36	261	*	*

A.T.–Restraint required at Tee only.
*–not applicable

NOTES:

1. This table is based on:
   a) maximum test pressure of 190 psi
   b) laying condition type 2 (see Details 2.01 and 2.02)
   c) poor soil conditions
   d) using D.I.P.
   e) 3 feet of cover for 12" and smaller mains; 4 feet of cover for 16" and larger mains
   f) Horizontal bends only – Engineer to submit calculations for vertical restraints
2. For polywrapped D.I.P., multiply the footage by 1.25
3. For PVC pipe multiply footage by 1.2.
4. Restrained pipe shall be manufactured restrained pipe, push–on restraint or mechanical joint pipe restrained by Megalug or equivalent.
5. Any additional fittings within the restrained section shall be restrained accordingly.
6. For Reducers: If "C" straight run of pipe downstream of reducer not available, then restrain "B" upstream of reducer.

TAMPA WATER DEPARTMENT	APPROVED	REVISED	RESTRAINED JOINT STANDARD FOR TEES AND REDUCERS	2.12

K:\Standard Details 02\213

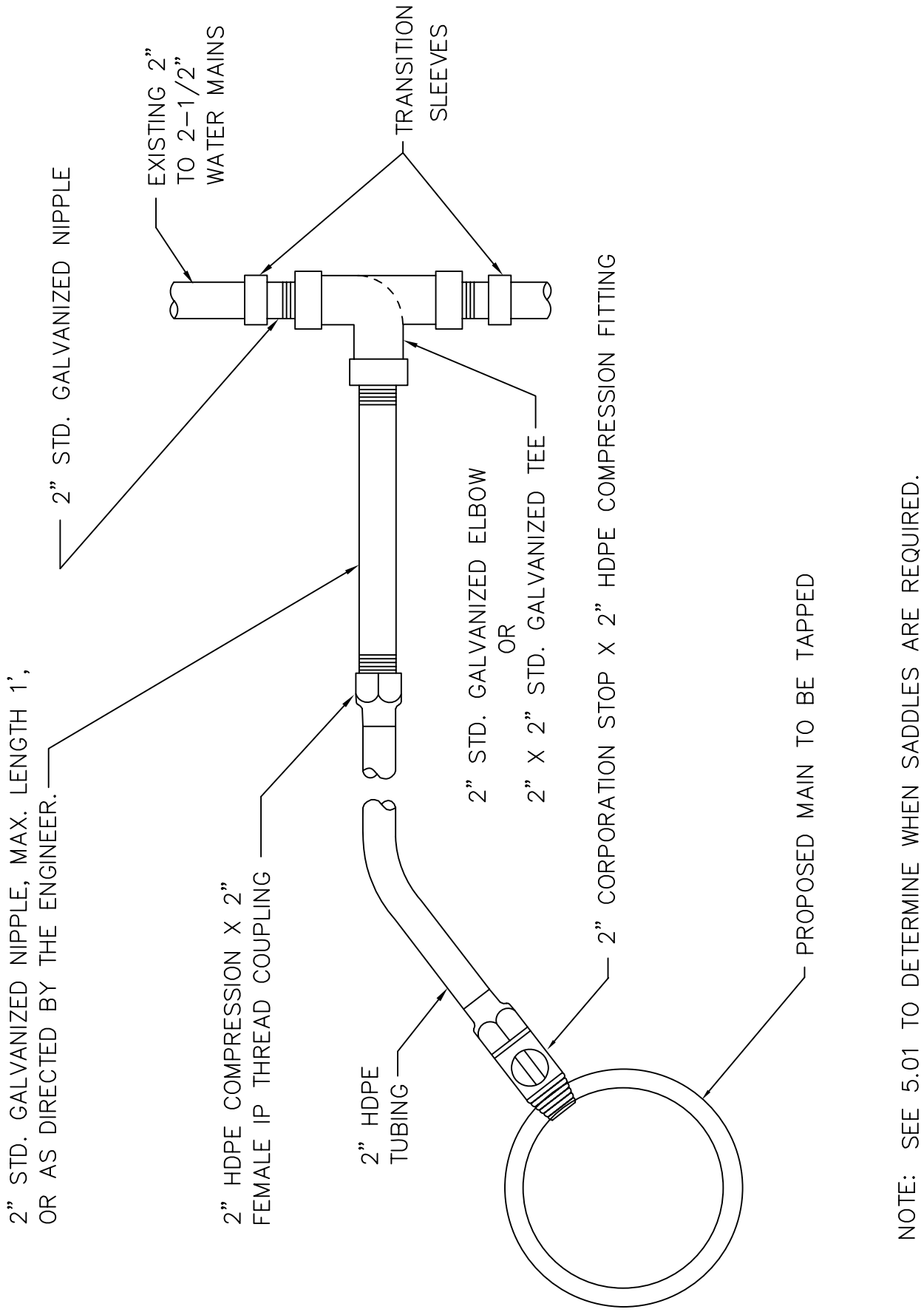

NOTE: SEE 5.01 TO DETERMINE WHEN SADDLES ARE REQUIRED.

TAMPA WATER DEPARTMENT	APPROVED	REVISED	TAPPED CONNECTION FOR 2" THRU 2-1/2" WATER MAINS	2.13

K:\Standard Details 02\214

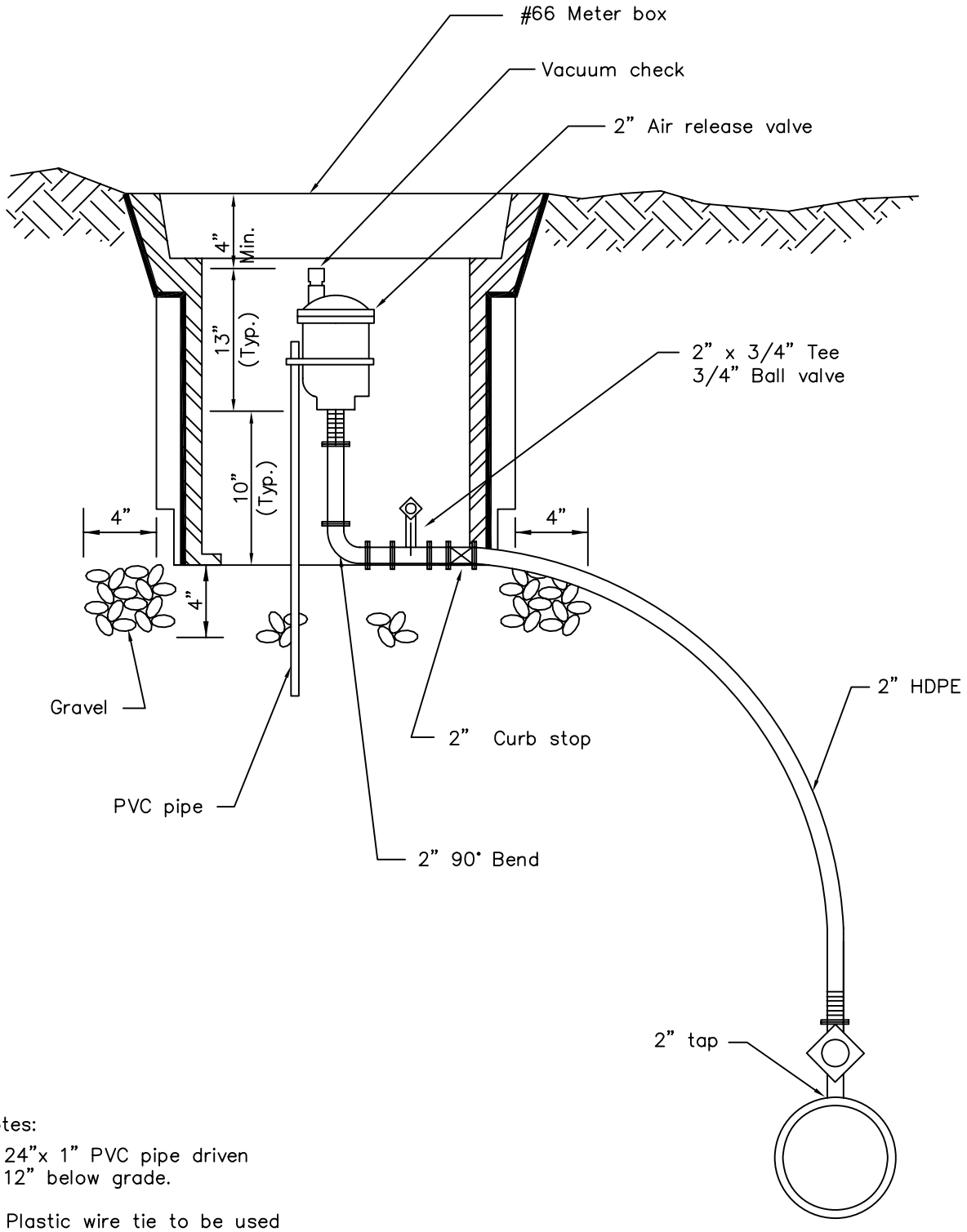

Notes:

1. 24"x 1" PVC pipe driven 12" below grade.

2. Plastic wire tie to be used to connect the air release valve to PVC pipe in order to keep the valve in the vertical position.

TAMPA WATER DEPARTMENT	APPROVED	REVISED	SUB-SURFACE AIR RELEASE VALVE	2.14

K:\Standard Details 02\215

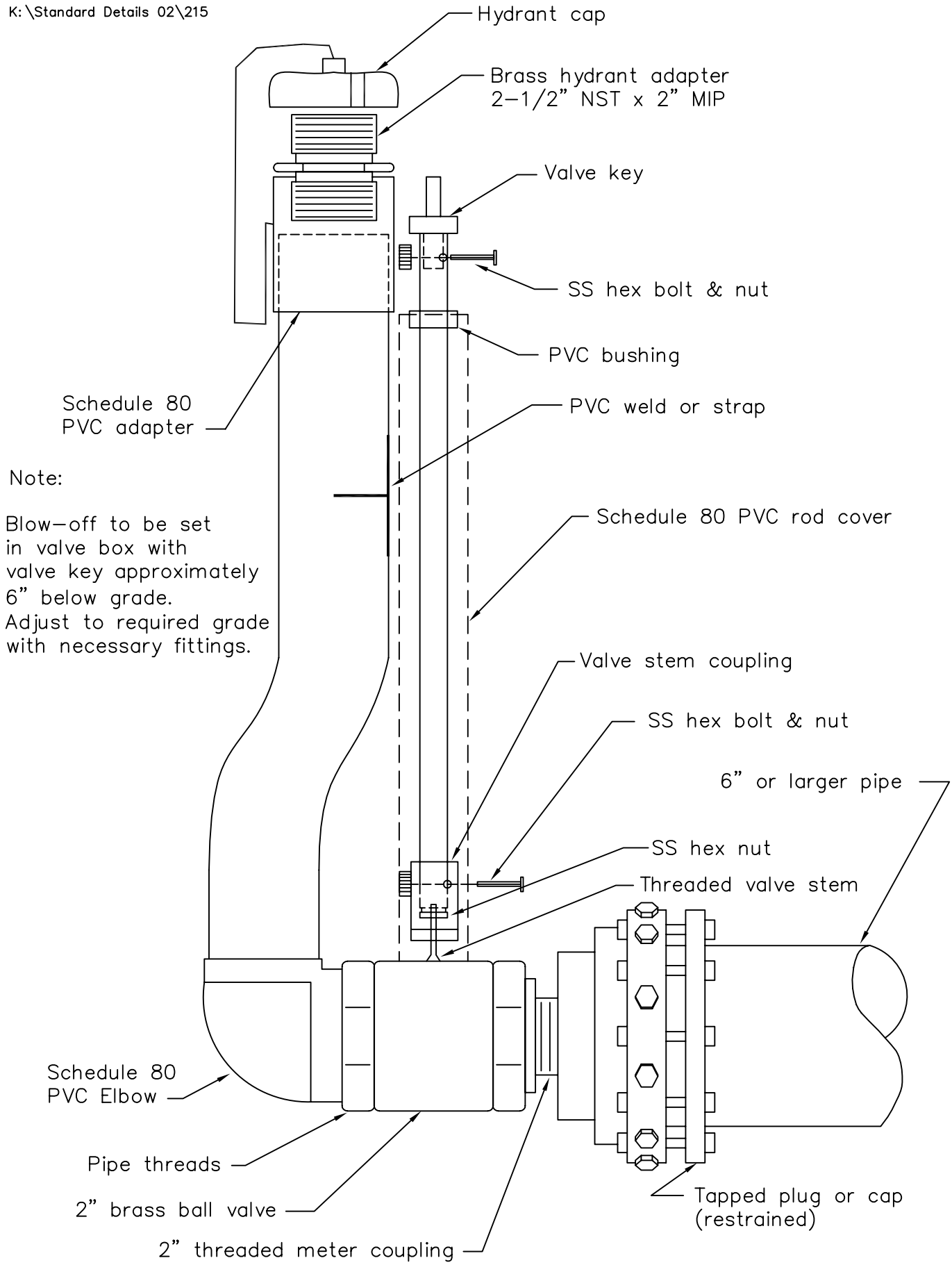

Note:

Blow-off to be set in valve box with valve key approximately 6" below grade. Adjust to required grade with necessary fittings.

TAMPA WATER DEPARTMENT	APPROVED	REVISED	2" BLOW-OFF BALL VALVE ASSEMBLY	2.15

K:\Standard Details 02\216

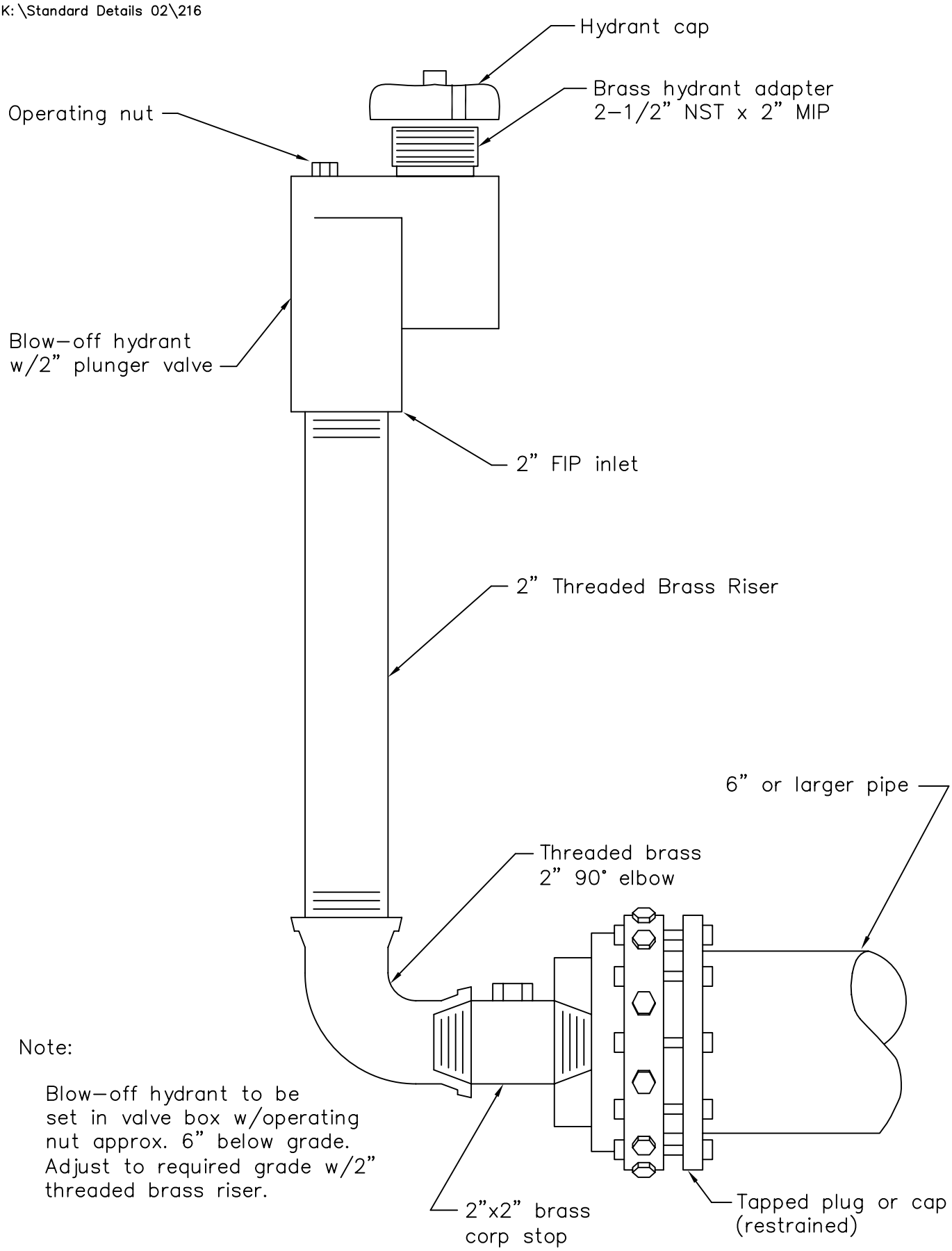

Note:

Blow-off hydrant to be set in valve box w/operating nut approx. 6" below grade. Adjust to required grade w/2" threaded brass riser.

TAMPA WATER DEPARTMENT	APPROVED	REVISED	2" BLOW-OFF PLUNGER VALVE ASSEMBLY	2.16

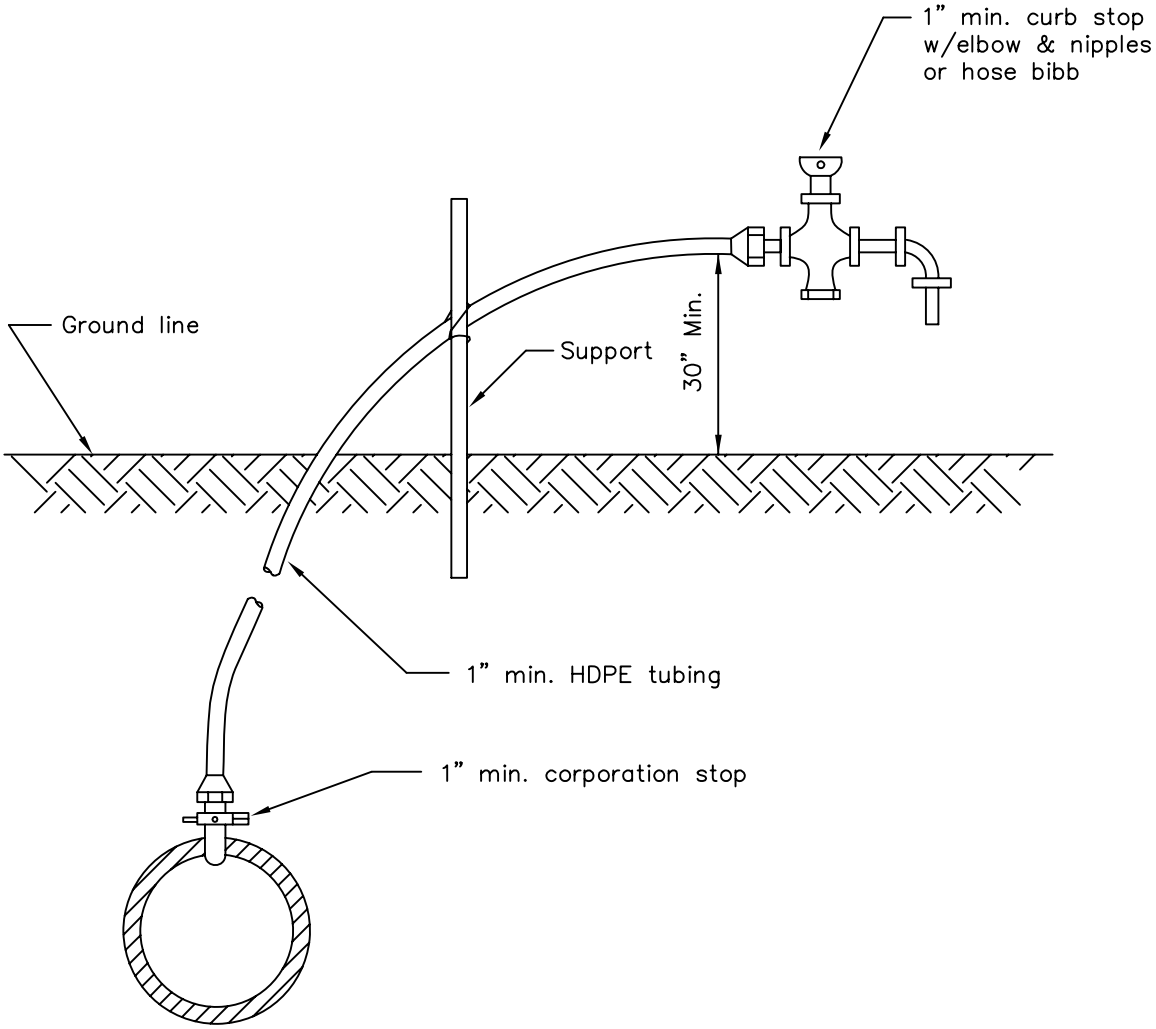

Notes:

1. Water outlet shall be held up off the ground so as not to interfere with the sampling process.

2. Corporation stop to be removed and plugged after operation.

TAMPA WATER DEPARTMENT	APPROVED	REVISED	TEMPORARY SAMPLE TAP INSTALLATION	2.17

K:\Standard Details 02\218

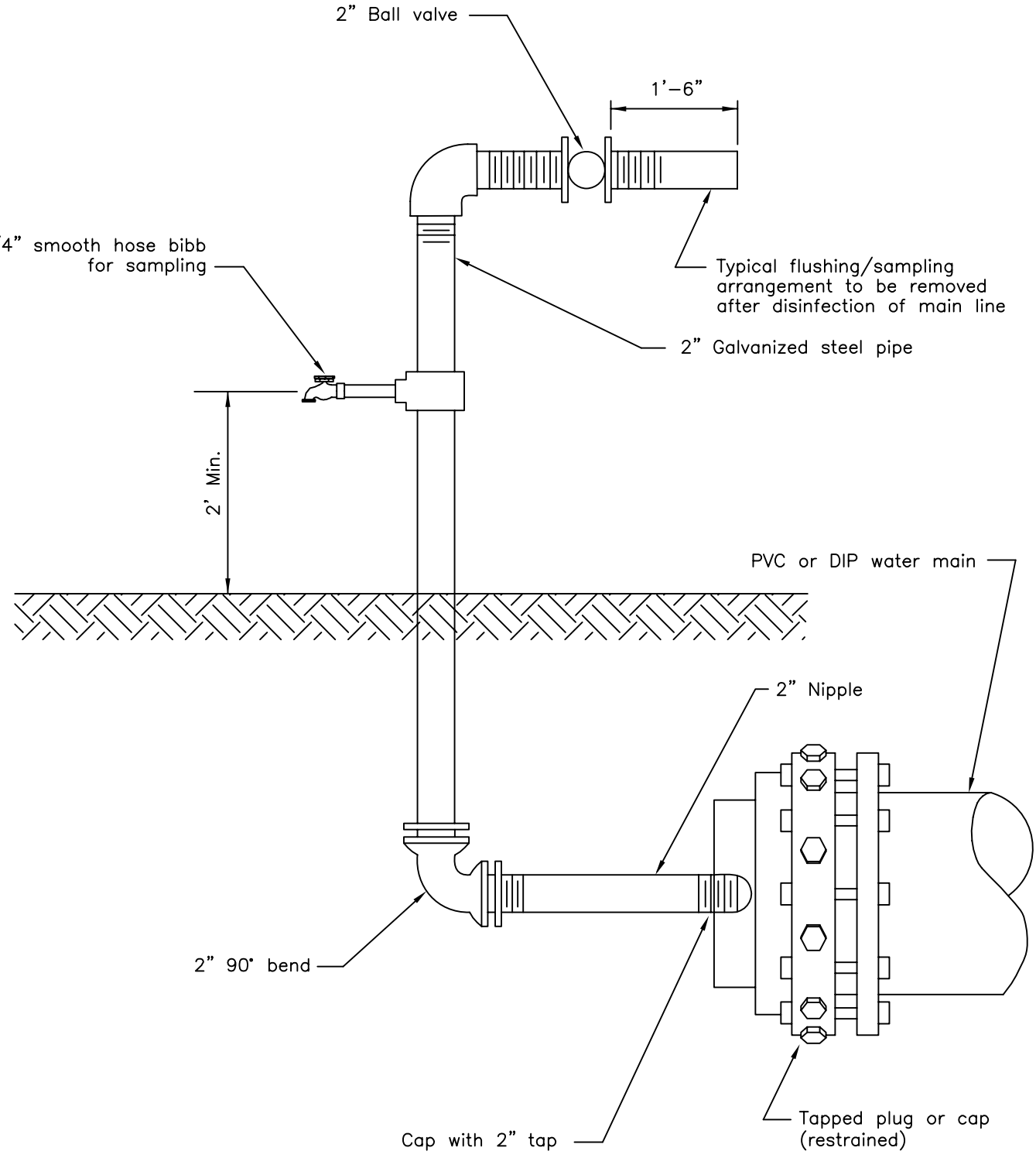

NOTES:

1. After testing, remove corporation stop and replace with tapered brass plug.
2. For dead-end mains, sample tap to be installed on a 2" tapped cap/plug.

TAMPA WATER DEPARTMENT	APPROVED	REVISED	TEMPORARY SAMPLE TAP INSTALLATION FOR END OF LINE	2.18

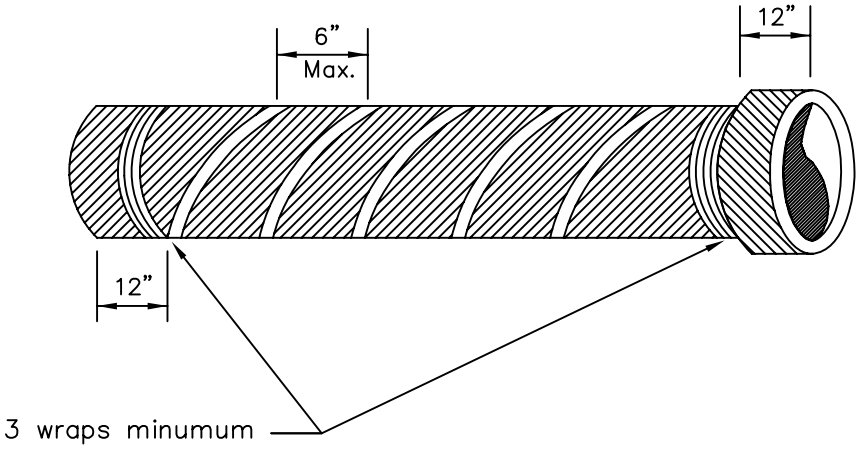

SPIRAL WRAP

NOTES:

1. To ensure proper adhesion, each pipe run shall be wrapped with a continuous run of tape.
2. All tape shall be min. 2" blue vinyl tape for potable water.

TAMPA WATER DEPARTMENT	APPROVED	REVISED	PIPE IDENTIFICATION DETAIL D.I.P. ONLY	2.19

K:\Standard Details 02\301

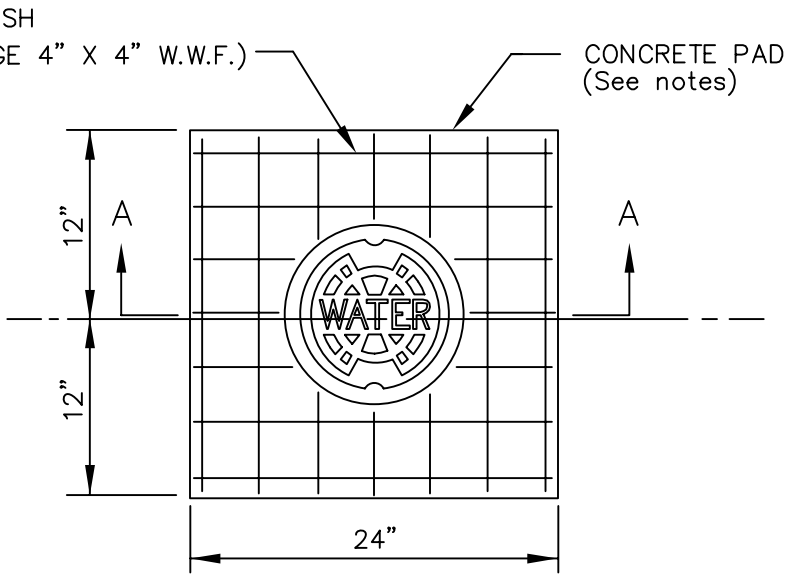

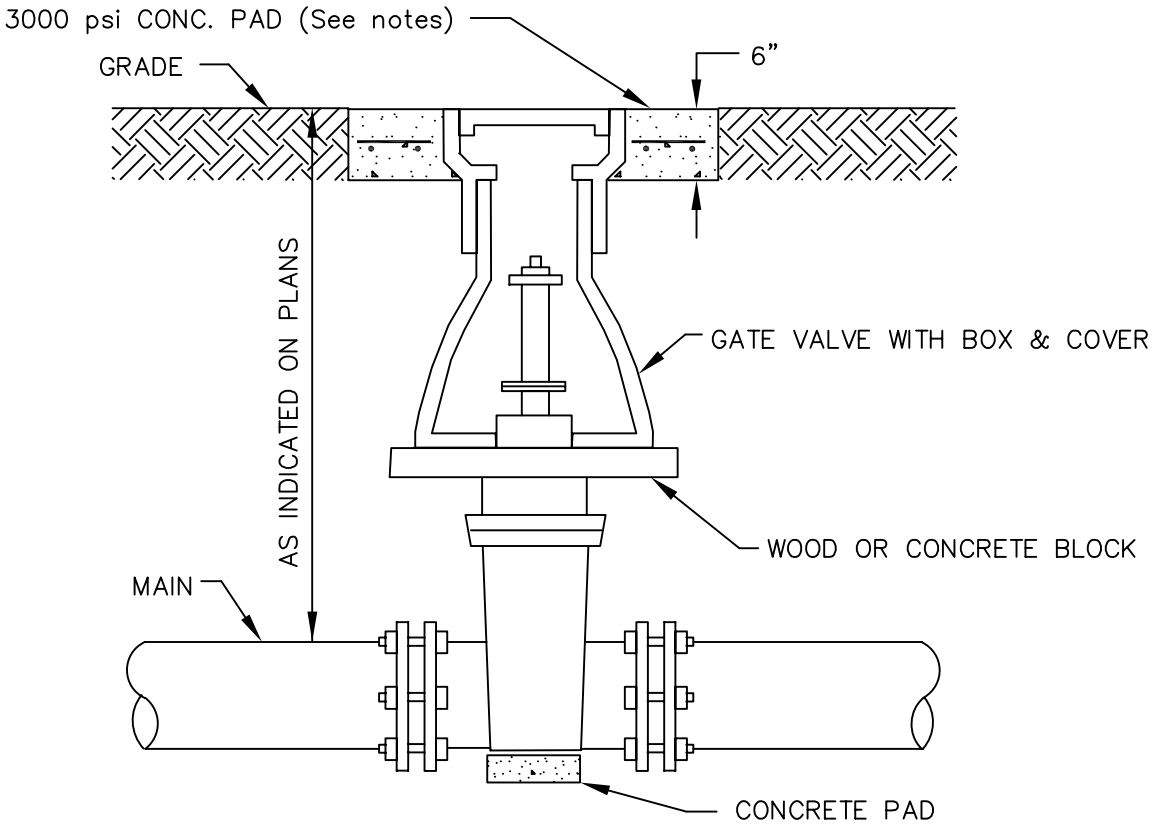

SECTION A–A

Notes :

1. Pad required for all applications.
2. Cast iron valve boxes shall be firmly supported and centered plumb over the operating nut of the valve by the contractor with valve box cover flush with the surface of the finished pavement or at such other level as may be directed.
3. Locate discs required for all valves.

TAMPA WATER DEPARTMENT	APPROVED	REVISED	TYPICAL GATE VALVE VALVE BOX AND PAD INSTALLATION	3.01

K:\Standard Details 02\302

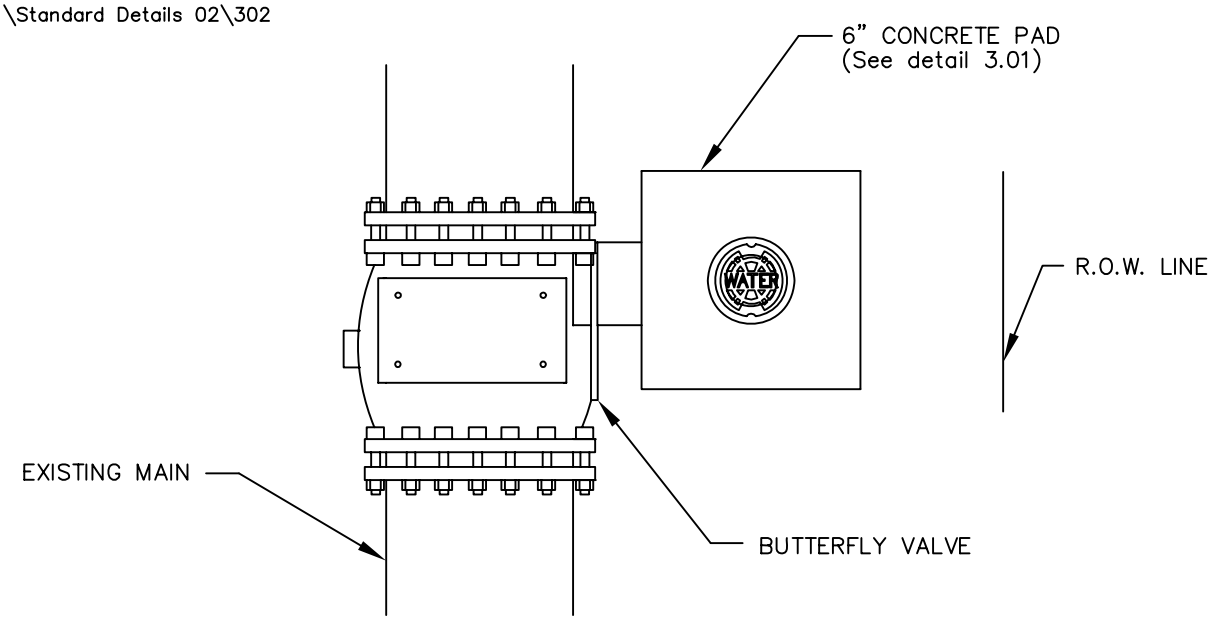

PLAN

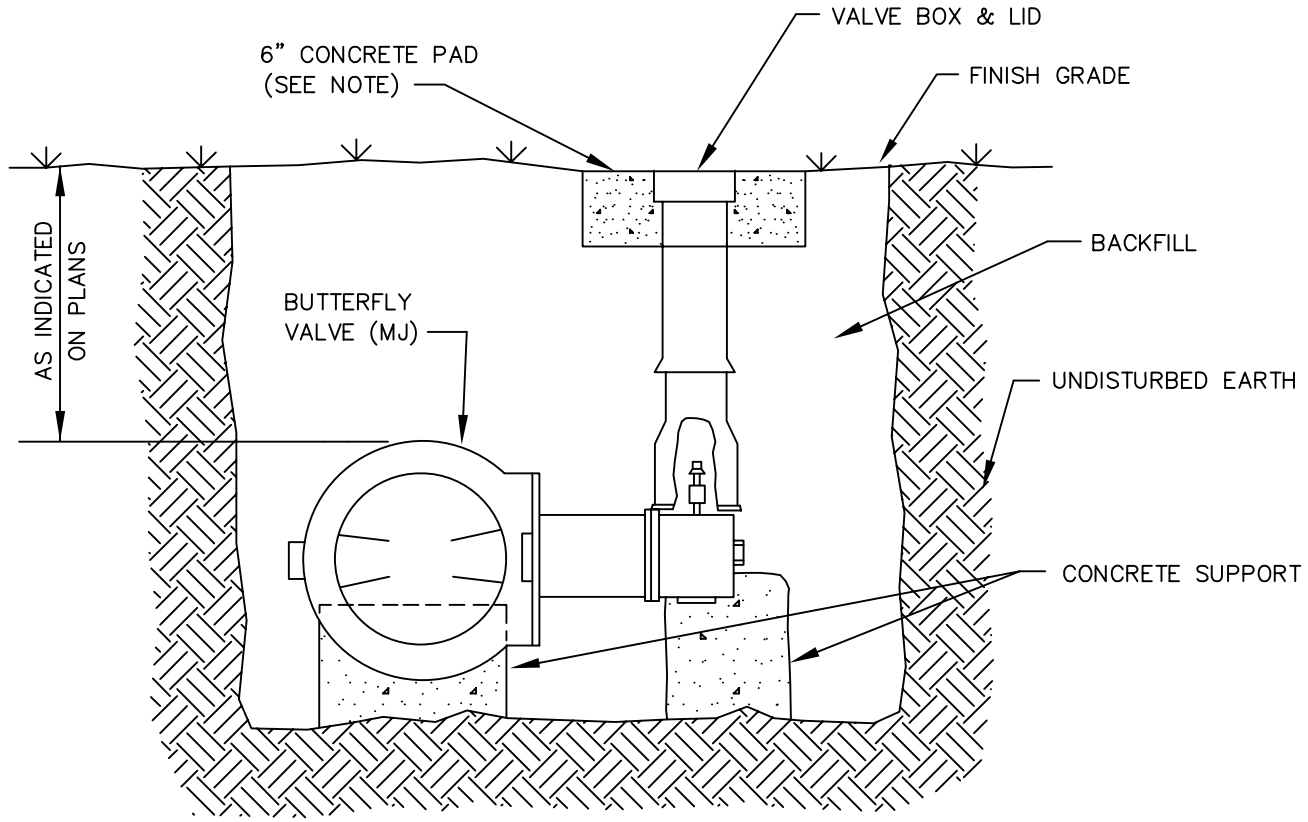

SECTION

NOTE: 1. If directed by the Engineer, concrete pads and concrete supports shall be furnished with valve assembly as specified in detail above.

2. Orient valve so operator is placed on the side of the pipe nearest the right-of-way line.

TAMPA WATER DEPARTMENT	APPROVED	REVISED	TYPICAL BUTTERFLY VALVE, VALVE BOX AND PAD INSTALLATION	3.02

K:\Standard Details 02\303

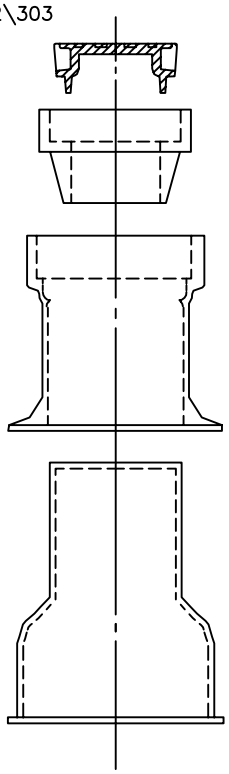

VALVE BOX ASSEMBLY

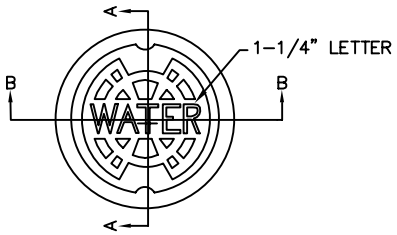

PLAN

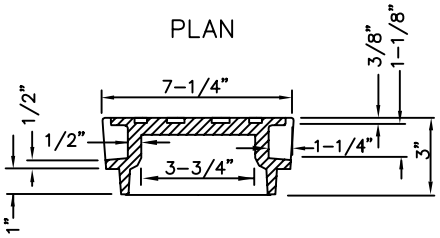

SECTION A–A

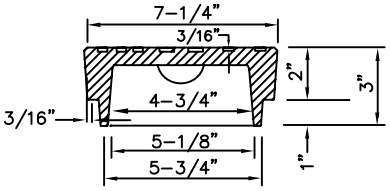

SECTION B–B

VALVE BOX COVER

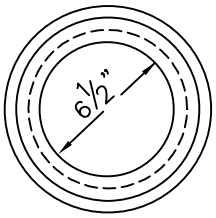

PLAN

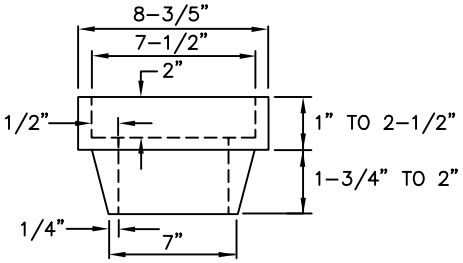

SIDE VIEW

RISER

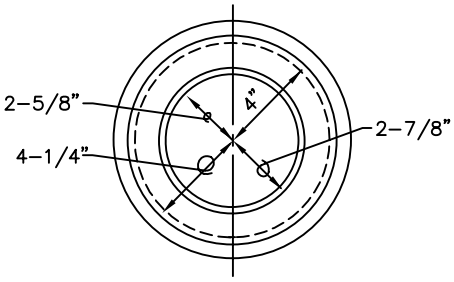

PLAN

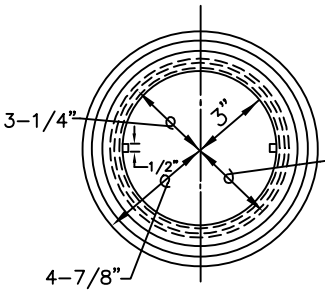

PLAN

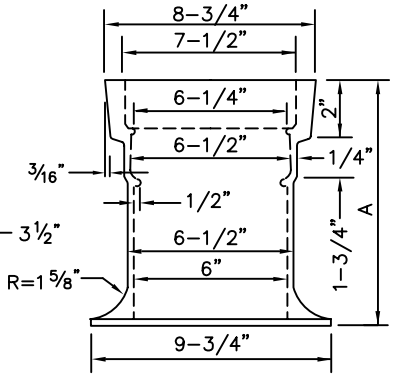

SIDE VIEW

TOP SECTION

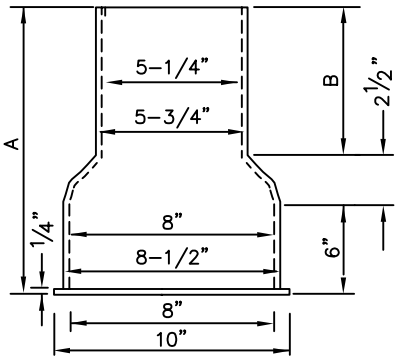

SIDE VIEW

BOTTOM SECTION

TOP SECTION	SIZE	A
	10"	10"
	16"	16"

BOTTOM SECTION	SIZE	A	B
	15"	15"	6-1/2"
	24"	24"	15-1/2"
	36"	36"	27-1/2"

TAMPA WATER DEPARTMENT	APPROVED	REVISED	VALVE BOX	3.03

K:\Standard Details 02\401

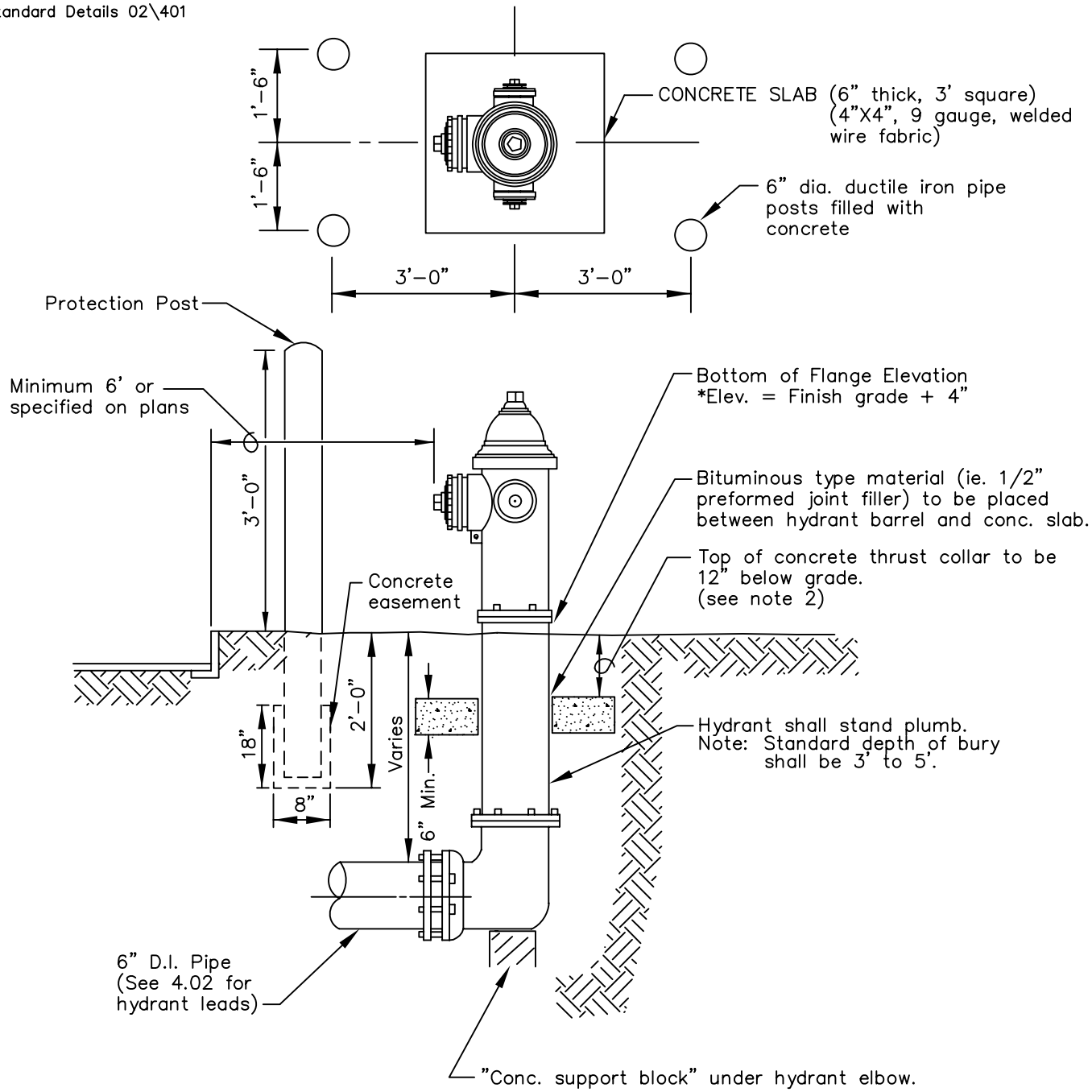

NOTES:

1. All fire hydrants shall be painted with a high grade enamel, Federal Safety Yellow (OSHA approved) above the ground line. Paint used for flow test color coding shall also be OSHA approved.
2. Concrete slab may be eliminated in areas where hydrant is set in sidewalk and sidewalk has been installed prior to final acceptance of the hydrant.
3. Thrust restraint for hydrant:
   a) hydrant shall be firmly supported under elbow in all methods by support block
   b) all backfill shall be thoroughly compacted under support block and under thrust collar
   c) all hydrant leads shall be restrained by Megalugs or equivalent mechanical restraints
4. Protection posts are required when hydrant is less than 6 feet from edge of pavement, or as directed by the Engineer.
5. For PVC mains, install concrete support block under all hydrant tees.

TAMPA WATER DEPARTMENT	APPROVED	REVISED	TYPICAL FIRE HYDRANT INSTALLATION	4.01

K:\Standard Details 02\402

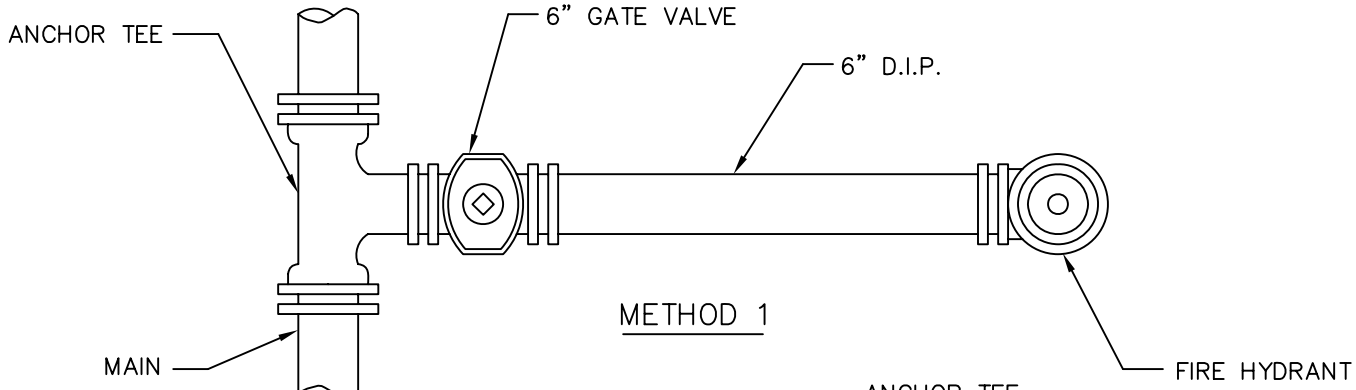

METHOD 1

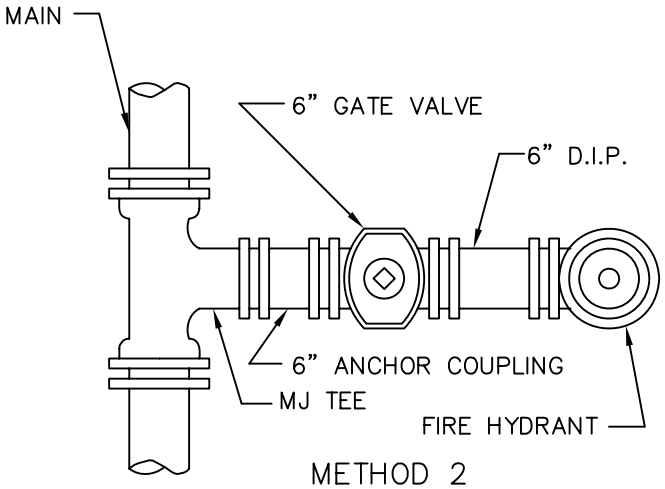

METHOD 2

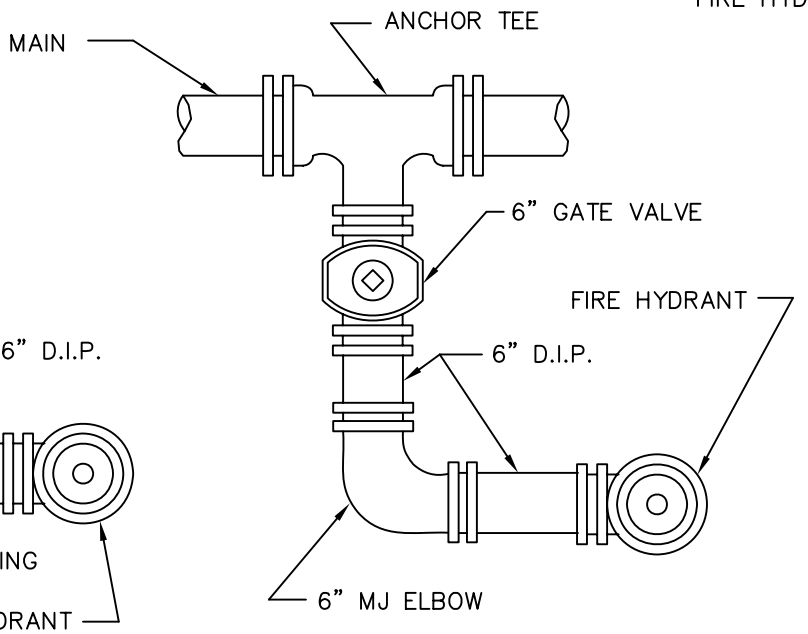

METHOD 3

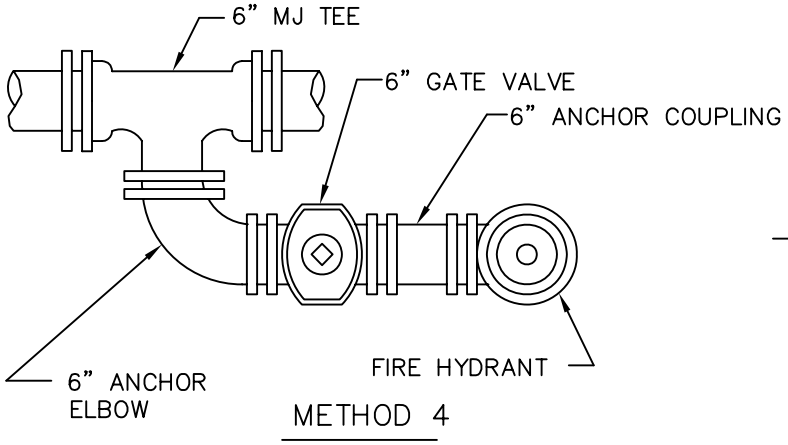

METHOD 4

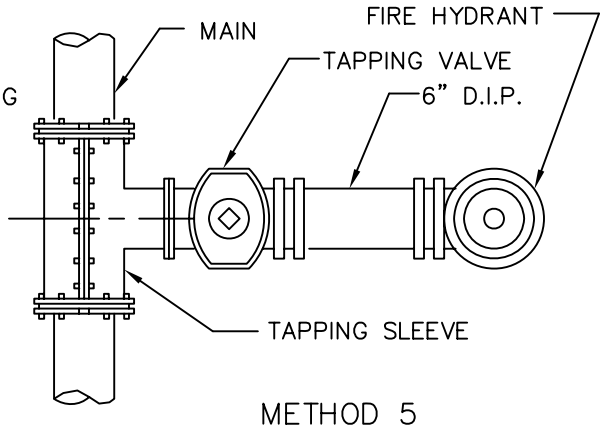

METHOD 5

1. Valve shall be set in accordance with Detail 3.01. For hydrant set, see Detail 4.01.
2. All valves shall be anchored to branch of tee on all hydrant installlations.
3. All hydrant leads shall be restrained by Megalugs or equivalent.
4. For PVC mains, install concrete support block under hydrant tees.

TAMPA WATER DEPARTMENT	APPROVED	REVISED	FIRE HYDRANT LEADS METHOD OF INSTALLATION	4.02

K:\Standard Details 02\501

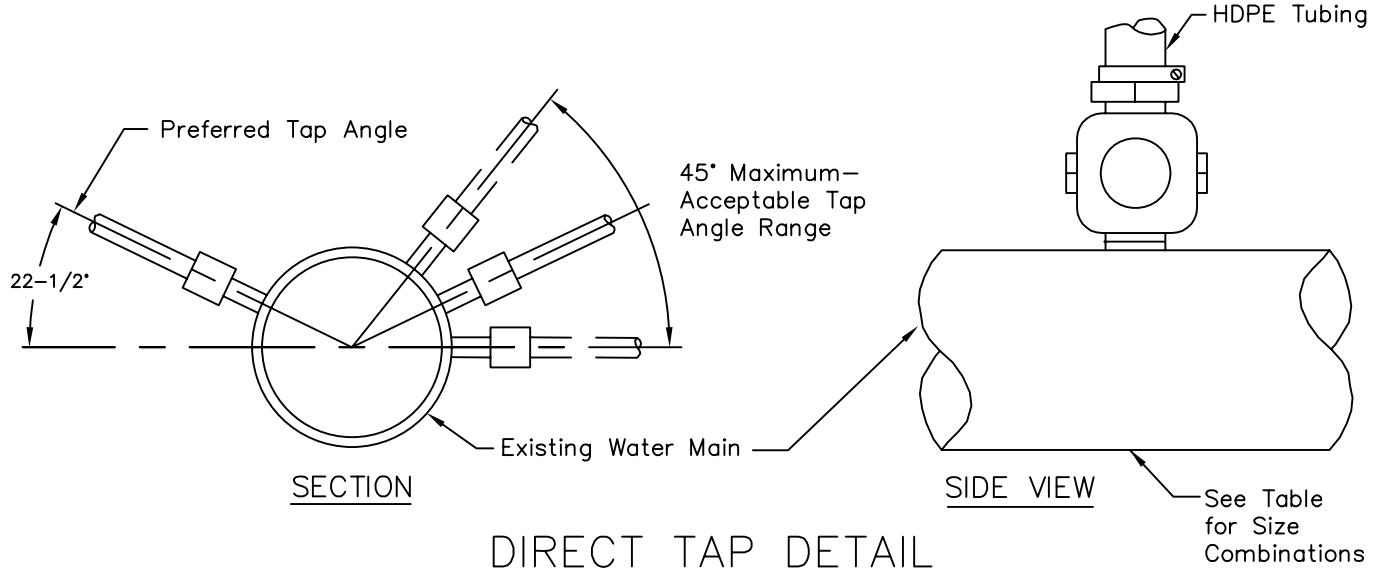

DIRECT TAP DETAIL

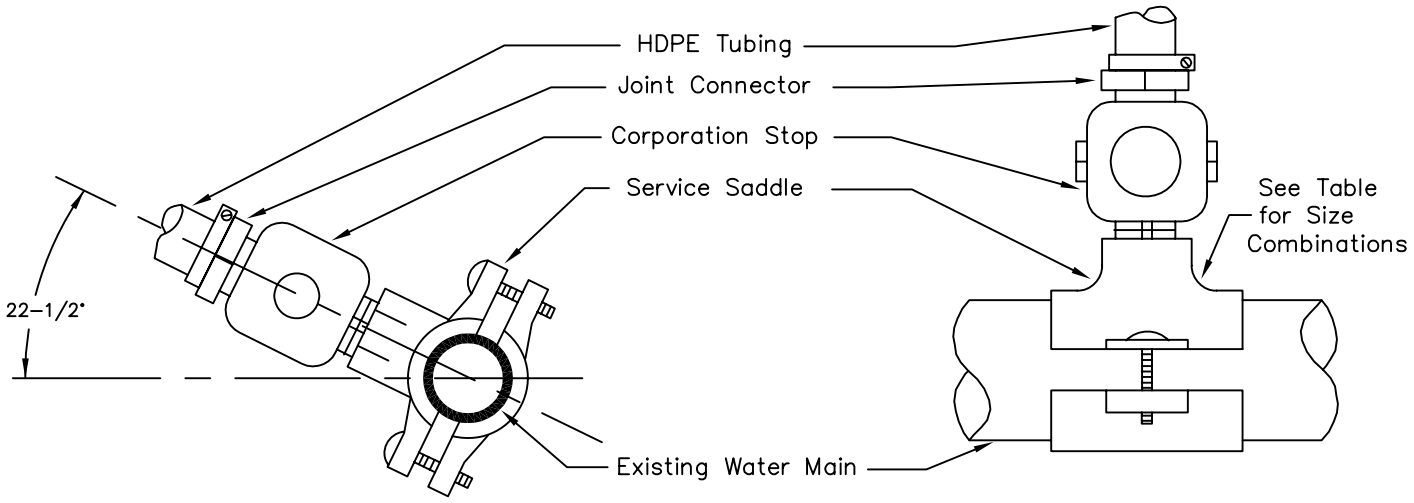

SADDLE TAP DETAIL

PIPE	SIZE	CORPORATION TAP SIZE	
		1"	2"
DI/CI	12"	DT	DT
	8"	DT	SS
	6"	DT	SS
	4"	SS	SS
PVC	2",2–1/2"	SS	NA
	8" C–900	SS	SS
	6" C–900	SS	SS
	2"–SDR21	SS	NA
OTHER*	12"	SS	SS
	10"	SS	SS
	8"	SS	SS
	6"	SS	SS
	4"	SS	NA
	3"	SS	NA
	2",2–1/2"	SS	NA

LEGEND

DT– Direct Tap Can be Allowed
SS– Service Saddle is Required
NA– Not Allowed
*Asbestos Cement, Steel, Galvanized Iron Pipe, Non Std PVC, etc.

TAMPA WATER DEPARTMENT	APPROVED	REVISED	TAPPING DETAIL FOR 3/4", 1", 1–1/2" & 2" CORPORATION STOP	5.01

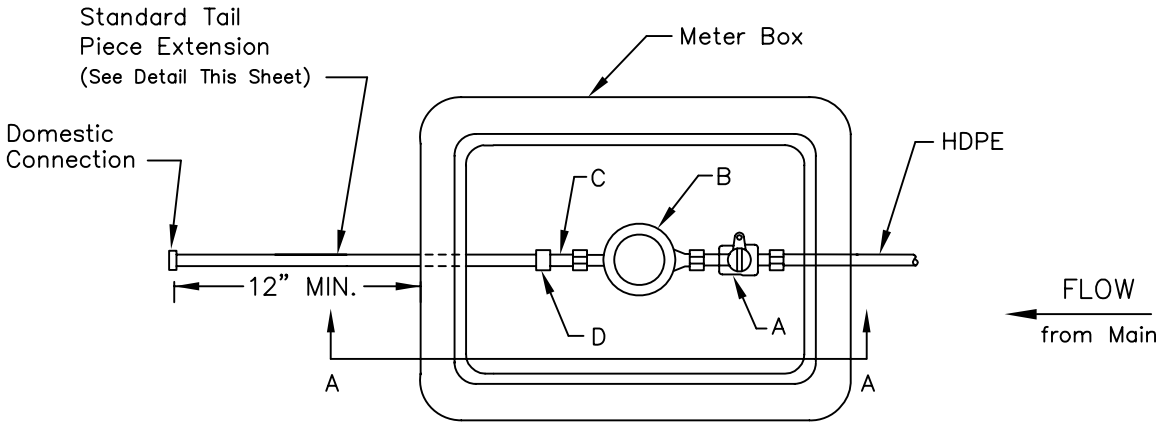

PLAN VIEW

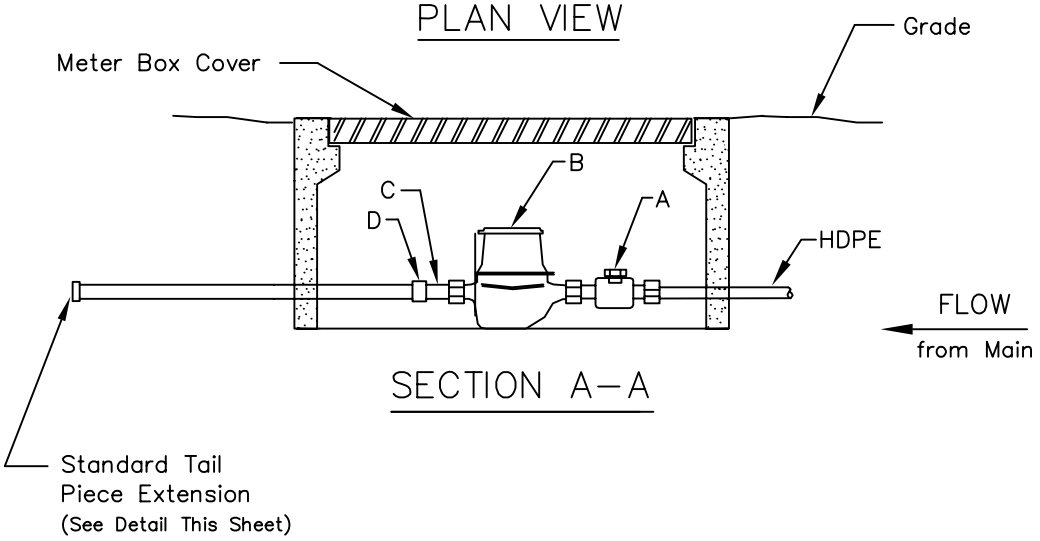

SECTION A–A

METER INSTALLATION

–PARTS LIST–

ITEM	DESCRIPTION
A	HDPE CJ X METER, SWIVEL NUT
B	METER
C	BRASS METER COUPLING
D	*PVC FIP X WELD COUPLING

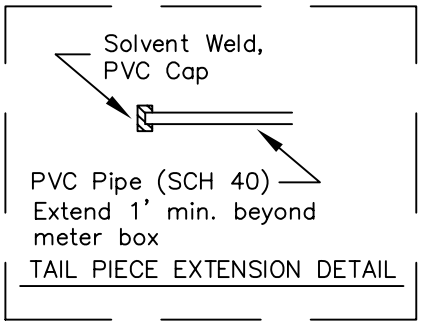

TAIL PIECE EXTENSION DETAIL

* All PVC pipe and fittings shall be SCH 80 except for standard tail piece section which will be SCH 40.

NOTE: Parts list is for standard installation; actual parts required may vary as directed by the Engineer.

TAMPA WATER DEPARTMENT	APPROVED	REVISED	SINGLE METER SET DETAIL 3/4", 1", 1–1/2", 2"	5.02

K:\Standard Details 02\503

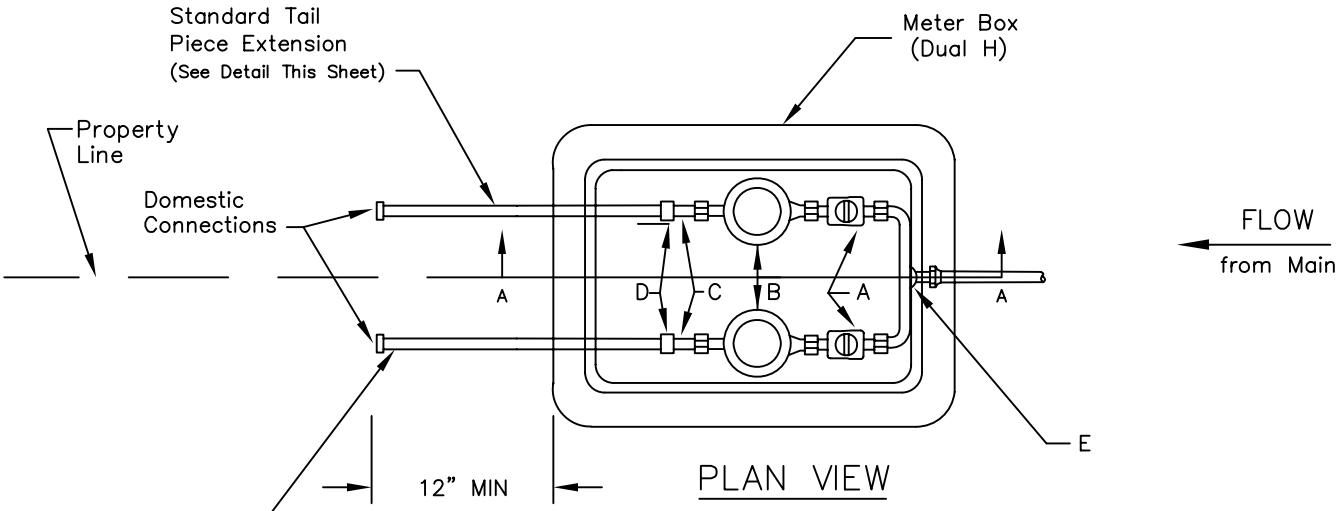

PLAN VIEW

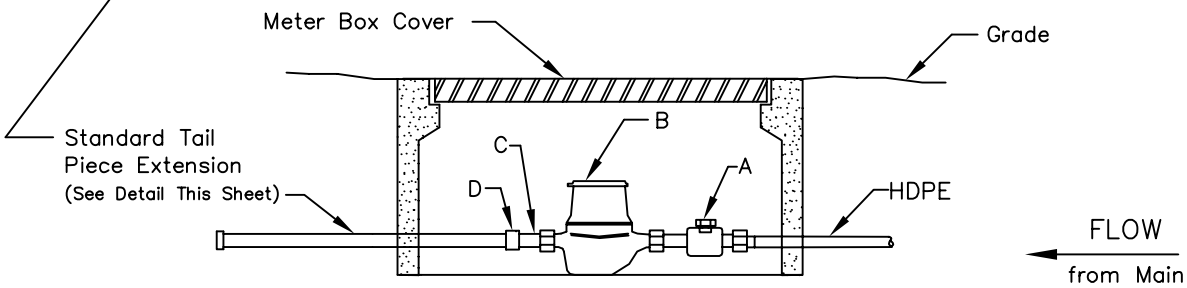

SECTION A–A

METER INSTALLATION

–PARTS LIST–

ITEM	DESCRIPTION
A	FIP CURB X METER SWIVEL NUT
B	METER
C	METER COUPLING
D	*PVC FIP X WELD COUPLING
E	MIP X HDPE CJ BRANCH COUPLING

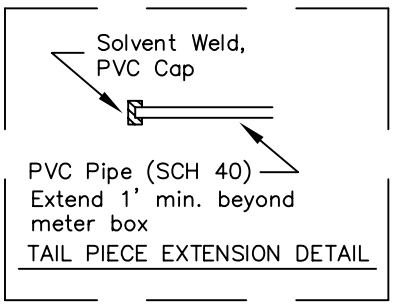

TAIL PIECE EXTENSION DETAIL

* All PVC pipe and fittings shall be SCH 80 Except for standard tail piece section which will be SCH 40.

NOTE: Parts list is for standard installation; actual parts required may vary as directed by the Engineer.

TAMPA WATER DEPARTMENT	APPROVED	REVISED	DUAL METER SET DETAIL 3/4" & 1"	5.03

K:\Standard Details 02\504

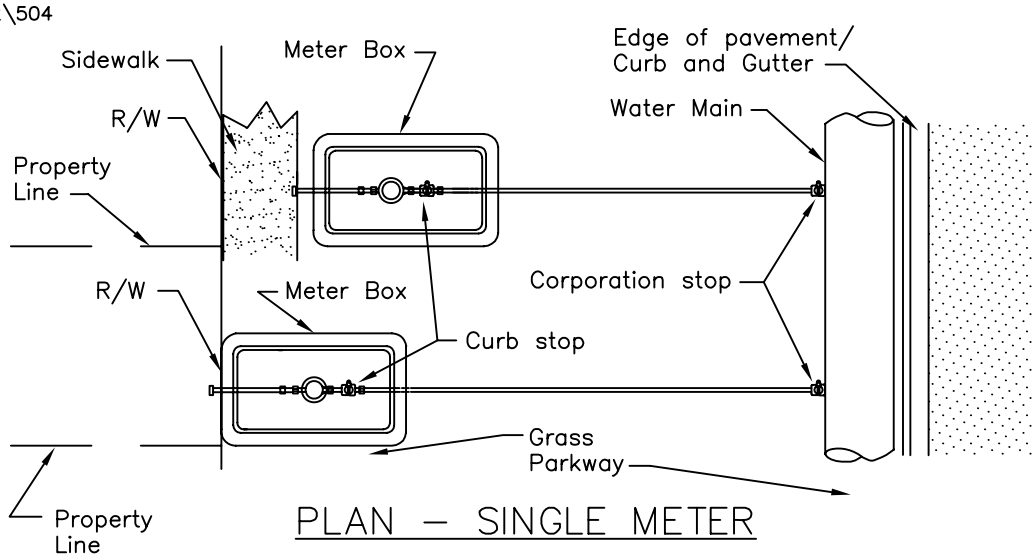

PLAN – SINGLE METER

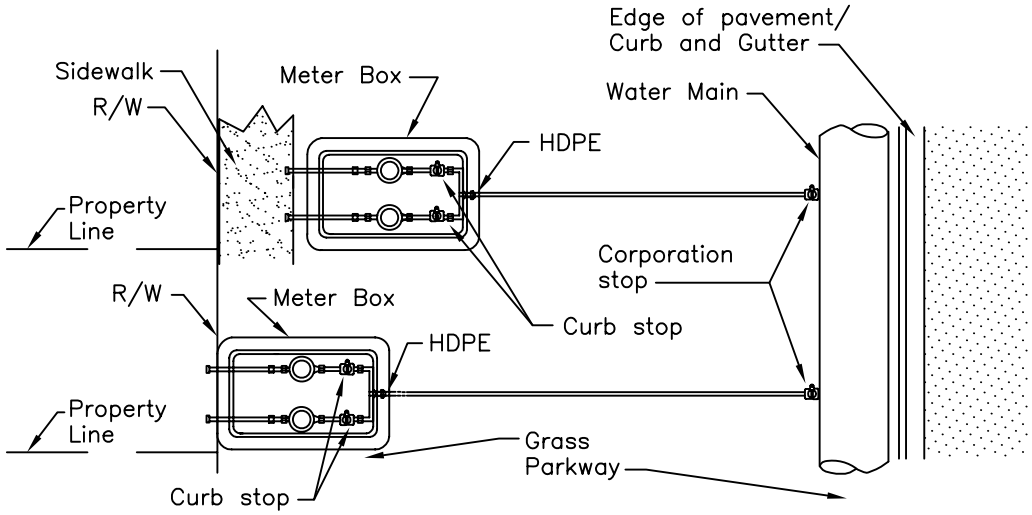

PLAN – DUAL METER

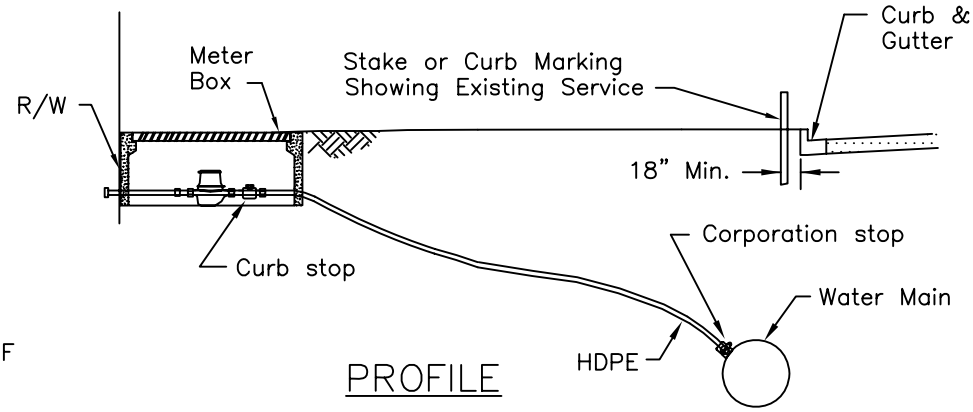

PROFILE

DO NOT INSTALL METER WITHIN SIDEWALK. WHEN SIDEWALK EXISTS, INSTALL METER ON STREET SIDE OF SIDEWALK OR WHERE DIRECTED BY ENGINEER.

SINGLE METER SIZE (inches)	SERVICE LINE SIZE (inches) (0–15')
3/4	1
1	1
1–1/2	2
2	2

DUAL METER SIZE (inches)	SERVICE LINE SIZE (inches) (0–15')
3/4	2
1	N/A
1–1/2	N/A
2	N/A

TAMPA WATER DEPARTMENT	APPROVED	REVISED	SINGLE & DUAL METERED SERVICE – SHORT SIDE 3/4", 1", 1–1/2" AND 2"	5.04

K:\Standard Details 02\505

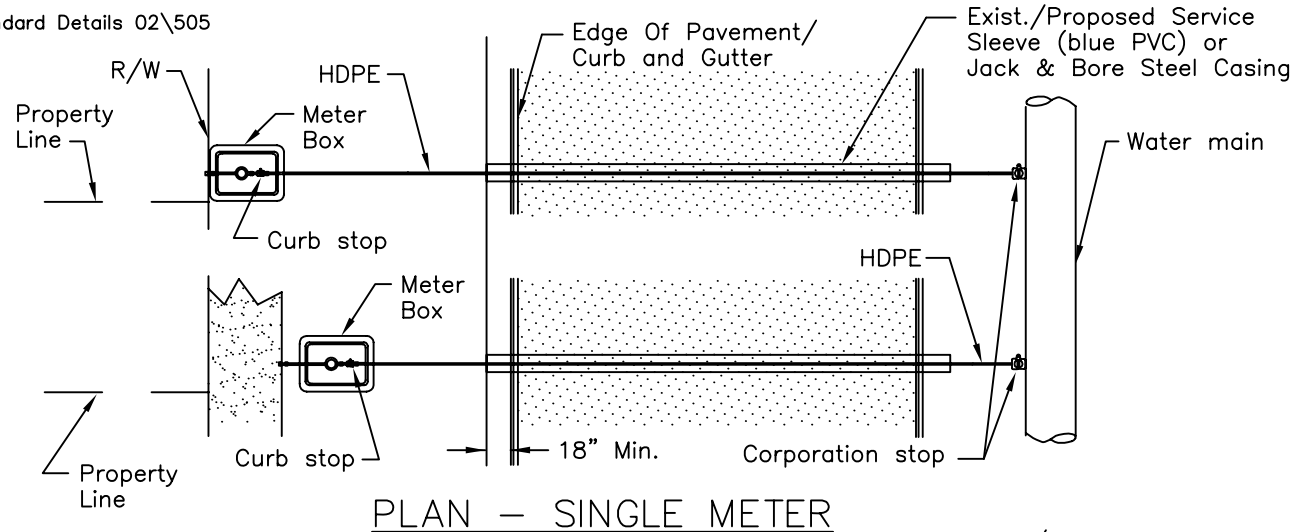

PLAN – SINGLE METER

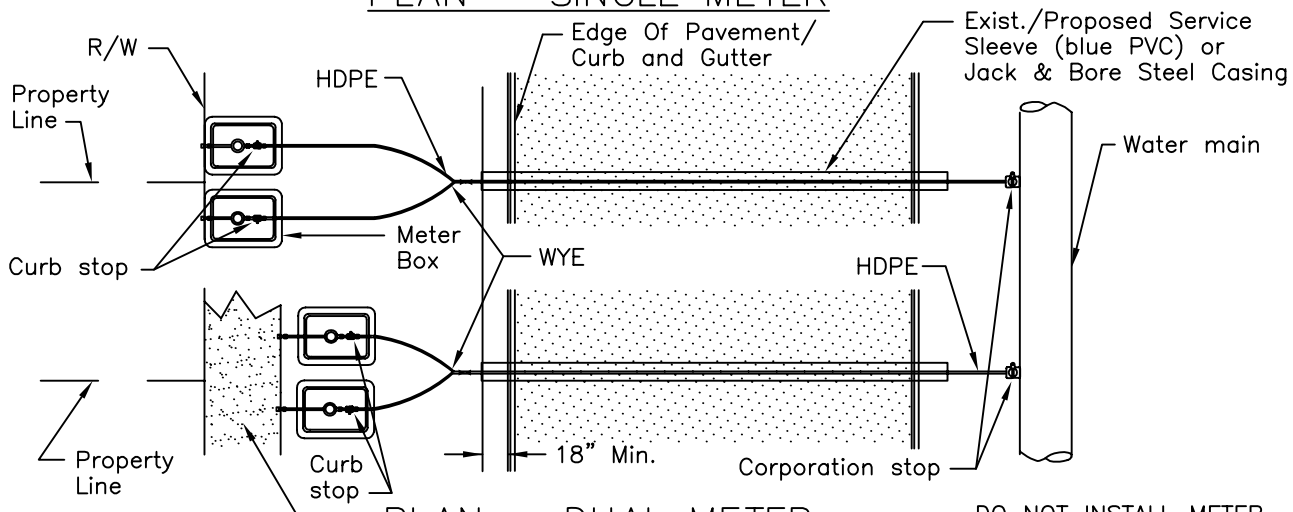

PLAN – DUAL METER

DO NOT INSTALL METER WITHIN SIDEWALK. WHEN SIDEWALK EXISTS, INSTALL METER ON STREET SIDE OF SIDEWALK OR WHERE DIRECTED BY ENGINEER.

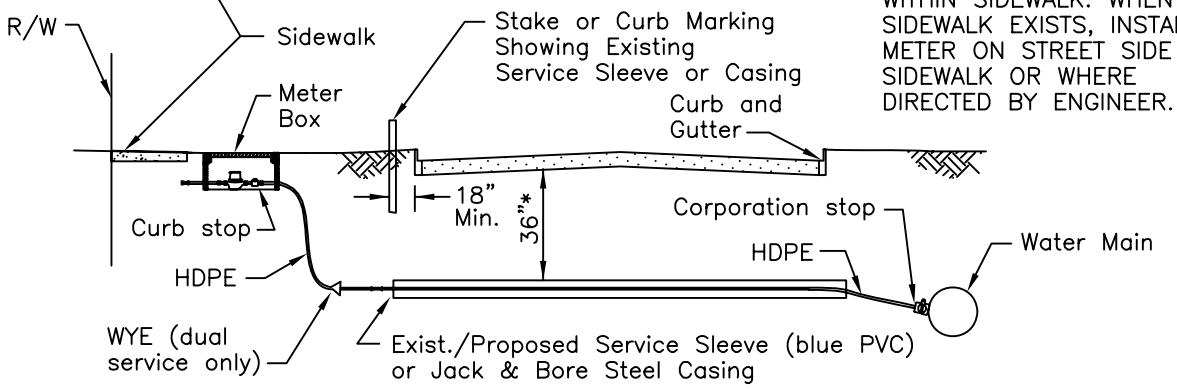

PROFILE

CASING SPECIFICATION:

1. If pushed–SCH 40 steel pipe (min.)
2. If layed in open trench–SCH 40 steel pipe or SCH 80 PVC solvent weld pipe.

*36" min. or greater if required by appropriate agency.

**These line size requirements are also for 2" S.D.C.V.s

SINGLE METER SIZE (inches)	SERVICE LINE SIZE (inches) (>15'–80')	(>80'–150')	CASING SIZE (inches)
3/4	1	2	2 / 4
1	2	2	4
1–1/2	2	2	4
2**	4" D.I.P.	4" D.I.P.	12

DUAL METER SIZE (inches)	SERVICE LINE SIZE (inches) (>15'–80')	(>80'–150')	CASING SIZE (inches)
3/4	2	2	4
1	2	4" D.I.P.	4 / 12
1–1/2	N/A	N/A	N/A
2	N/A	N/A	N/A

TAMPA WATER DEPARTMENT	APPROVED	REVISED	SINGLE & DUAL METERED SERVICE – LONG SIDE 3/4", 1", 1–1/2" AND 2"	5.05

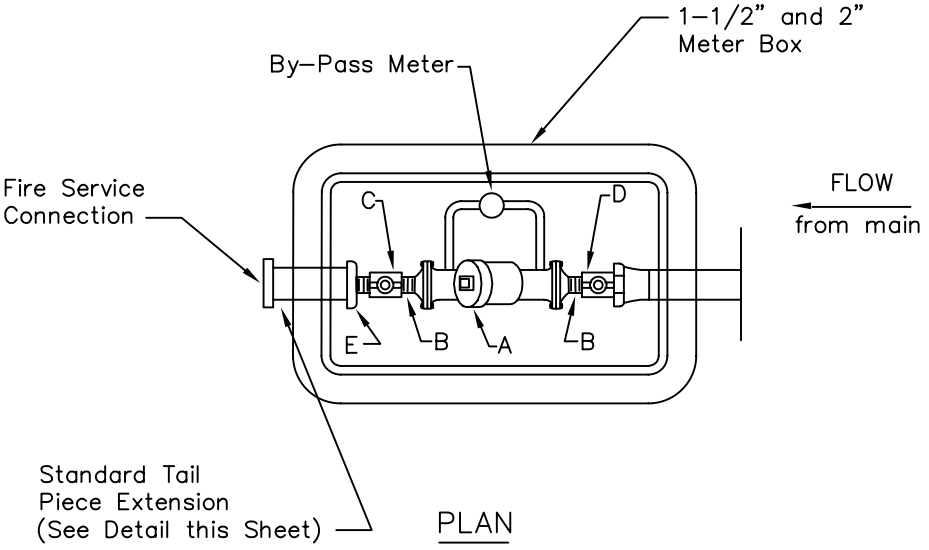

PLAN

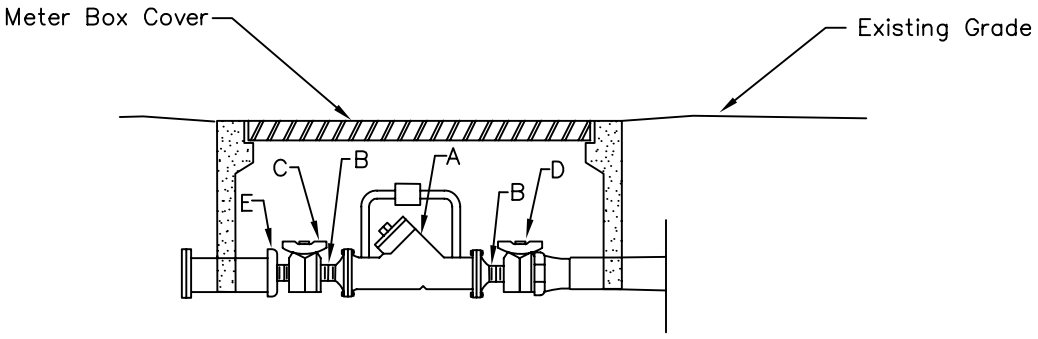

PROFILE

D.C.V. INSTALLATION

-PARTS LIST-

ITEM	DESCRIPTION
A	2" DETECTOR CHECK VALVE
B	2" CLOSE NIPPLE
C	2" CURB STOP FIP X FIP
D	2" CURB STOP FIP X CC
E	2" SCH 40 PVC MIP X WELD COUPLING

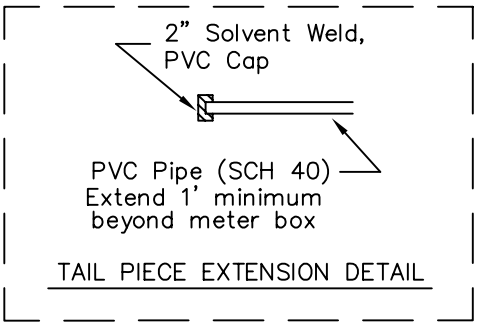

TAIL PIECE EXTENSION DETAIL

NOTE: Parts list is for standard installation; actual parts required may vary as directed by the Engineer.

TAMPA WATER DEPARTMENT	APPROVED	REVISED	2" DETECTOR CHECK VALVE ASSEMBLY IN METER BOX	5.09

K:\Standard Details 02\510

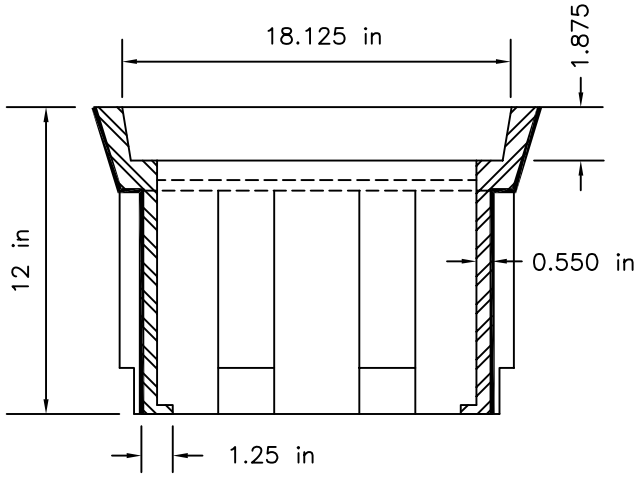

LONG SIDE VIEW

HDPE
METER BOX

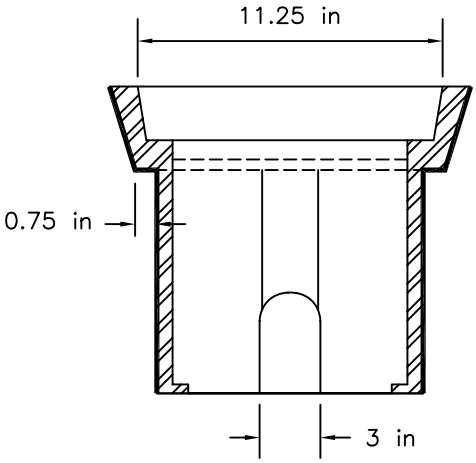

SHORT SIDE VIEW

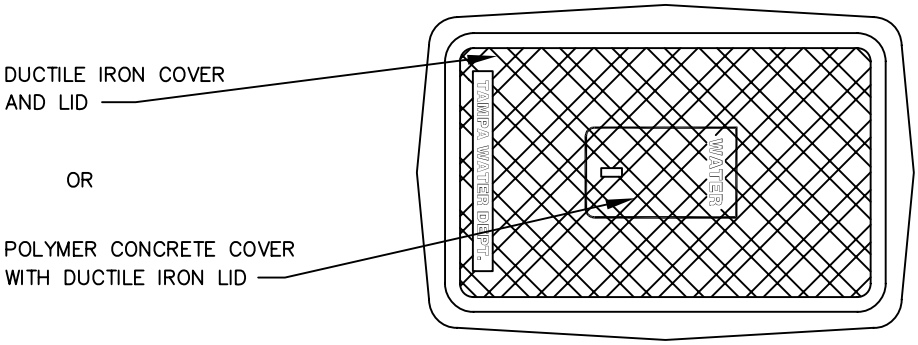

TOP VIEW

TAMPA WATER DEPARTMENT	APPROVED	REVISED	3/4" OR 1" SINGLE SERVICE METER BOX	5.10

K:\Standard Details 02\511

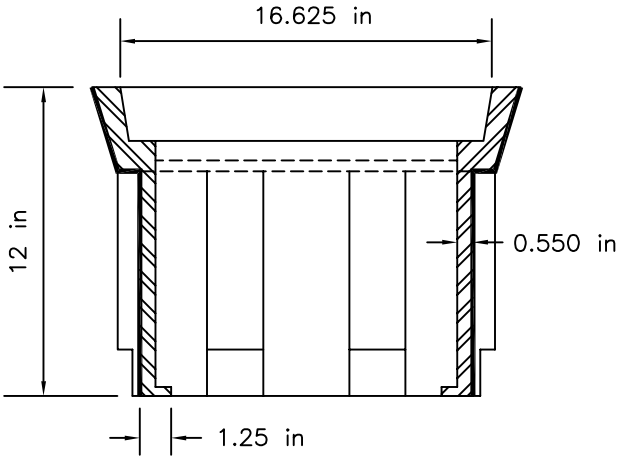

LONG SIDE VIEW

HDPE
METER BOX

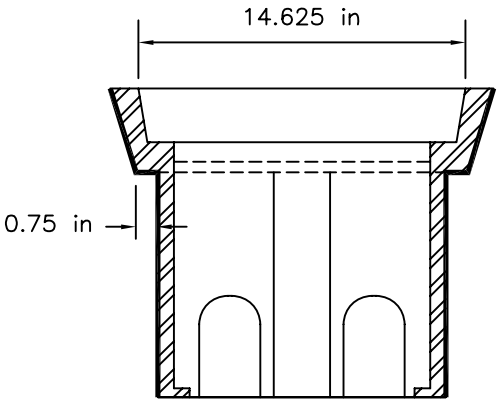

SHORT SIDE VIEW (BACK)

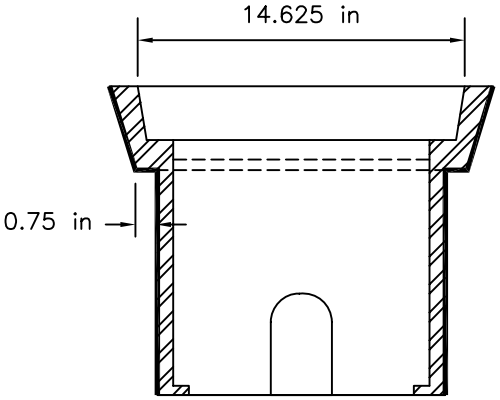

SHORT SIDE VIEW (FRONT)

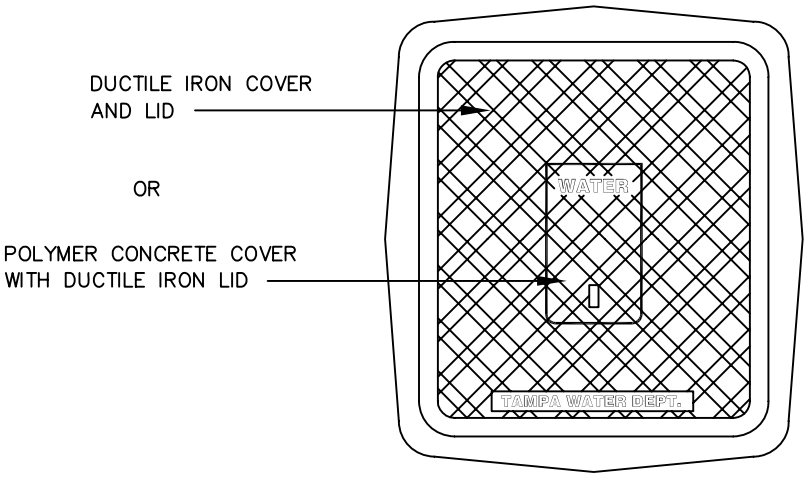

TOP VIEW

TAMPA WATER DEPARTMENT	APPROVED	REVISED	3/4" OR 1" DUAL SERVICE METER BOX	5.11

K:\Standard Details 02\512

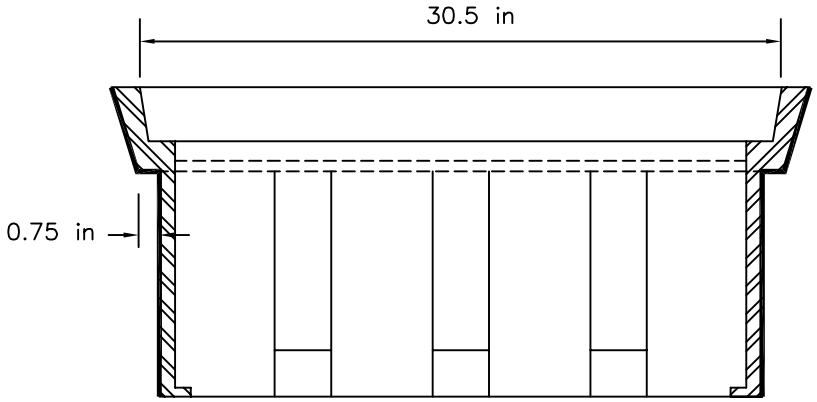

HDPE
METER BOX

LONG SIDE VIEW

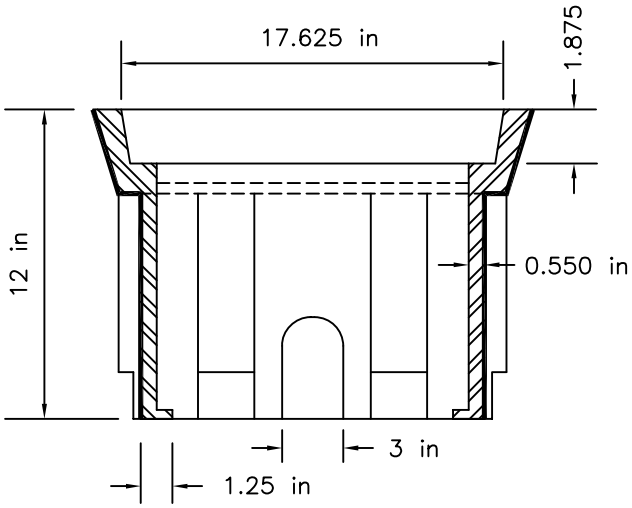

SHORT SIDE VIEW

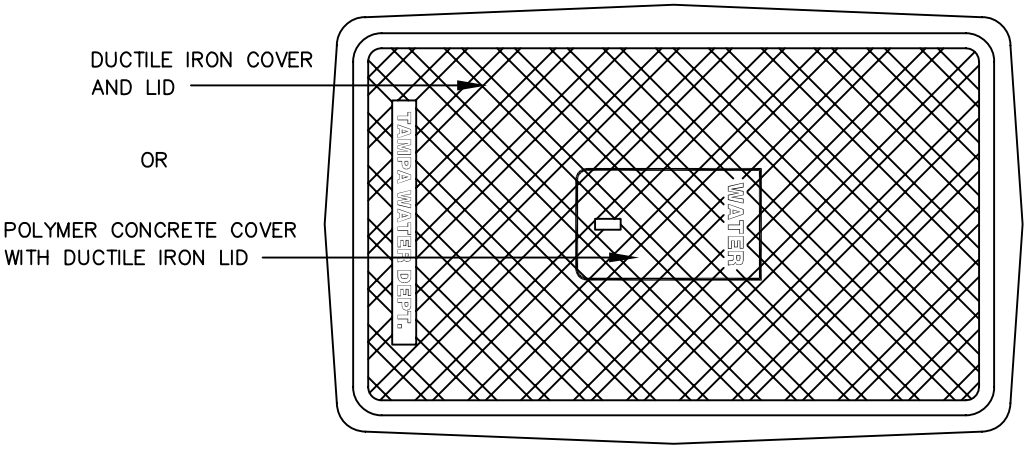

TOP VIEW

TAMPA WATER DEPARTMENT	APPROVED	REVISED	1-1/2" & 2" SINGLE SERVICE METER BOX	5.12

K:\Standard Details 02\601

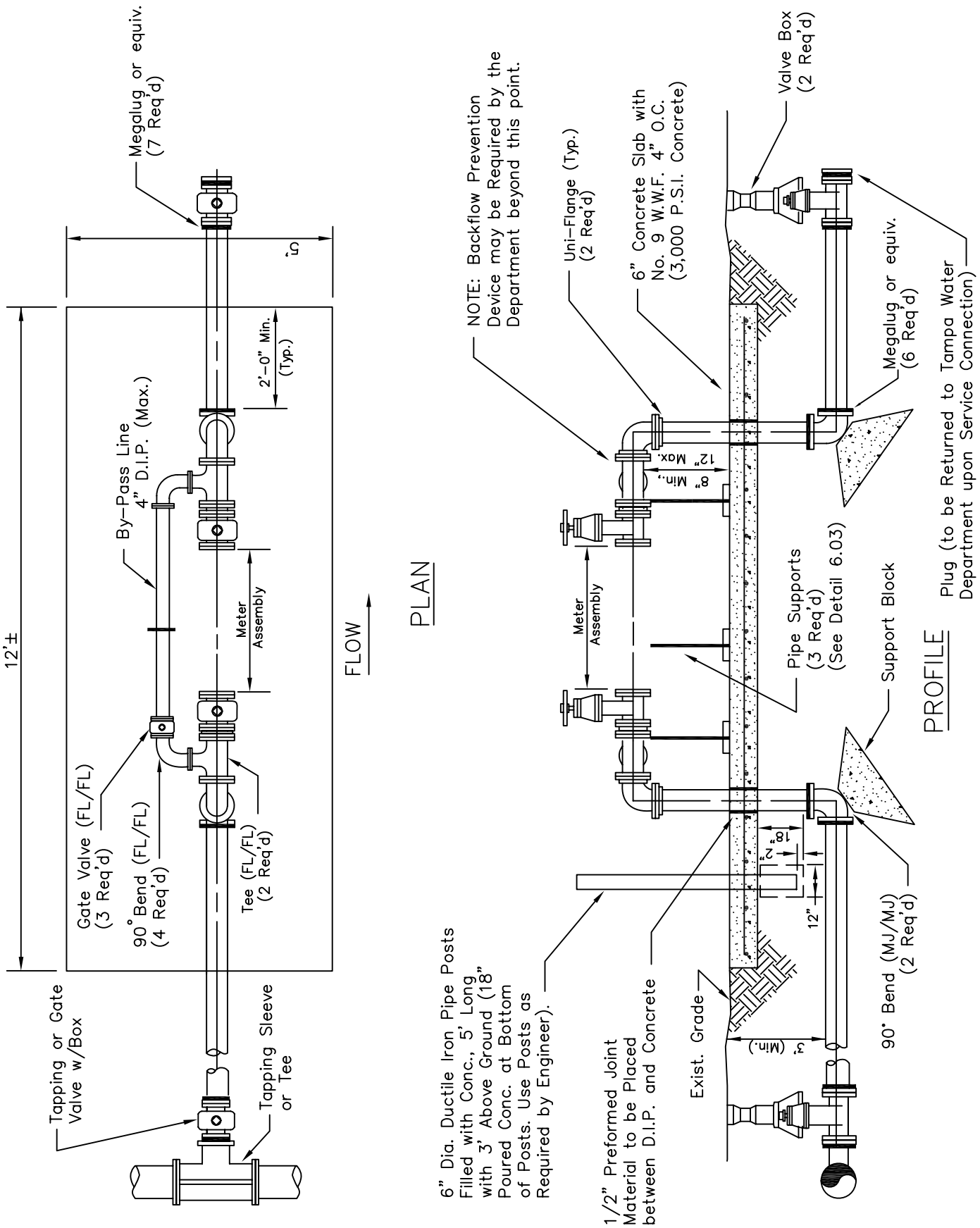

TAMPA WATER DEPARTMENT	APPROVED	REVISED	ABOVE GROUND TURBINE METER W/STRAINERS	6.01

TAMPA WATER DEPARTMENT

APPROVED

REVISED

ABOVE GROUND DOUBLE DETECTOR CHECK VALVE ASSEMBLY

6.02

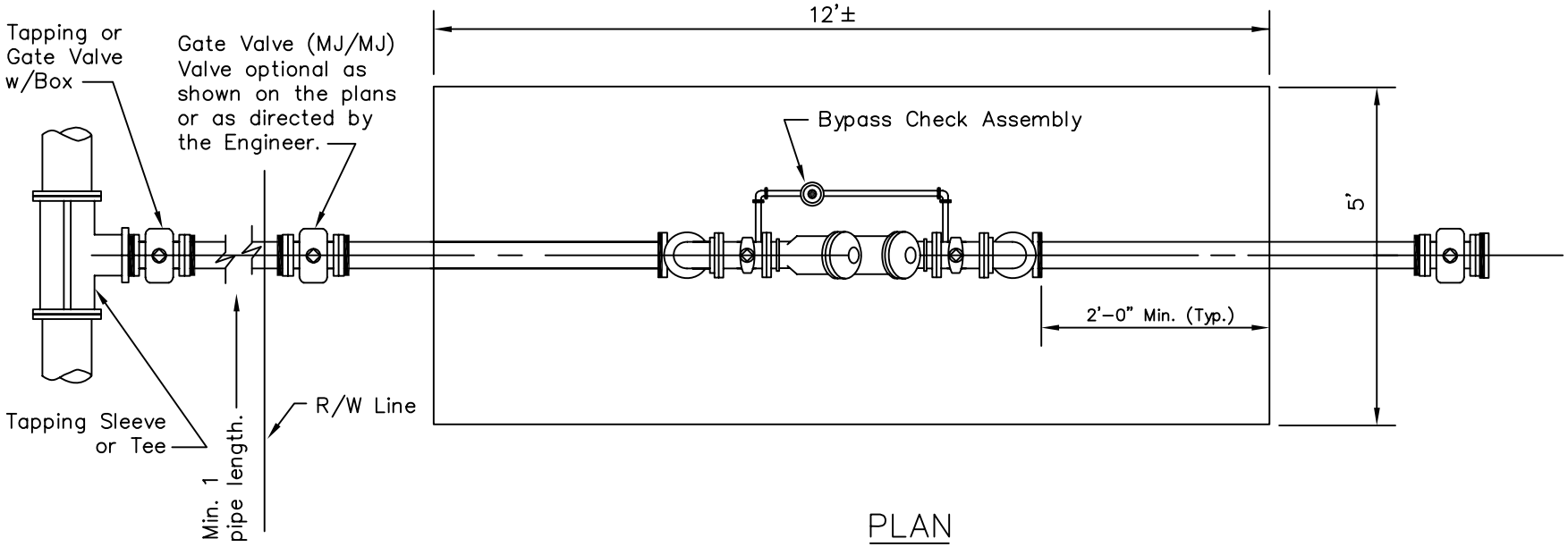

PLAN

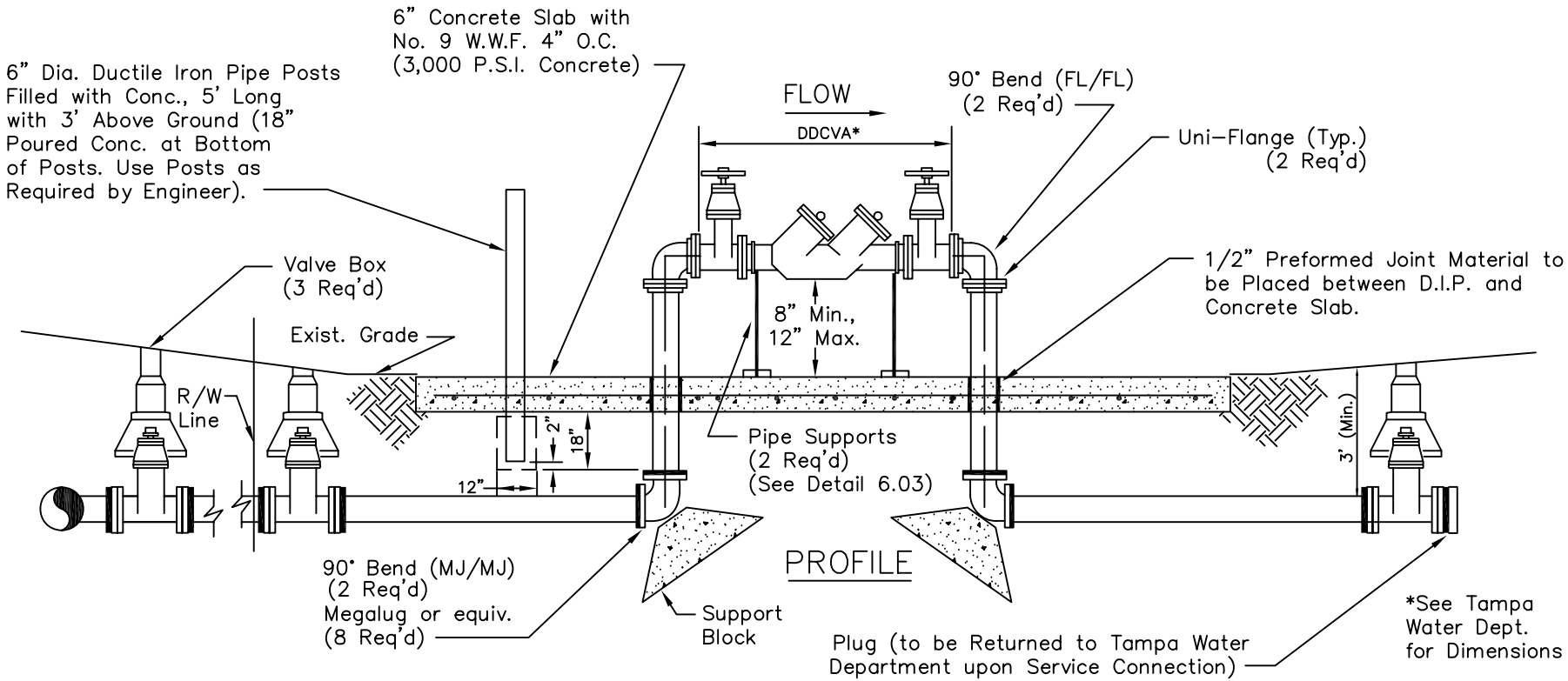

PROFILE

K:\Standard Details 02\602

K:\Standard Details 02\603

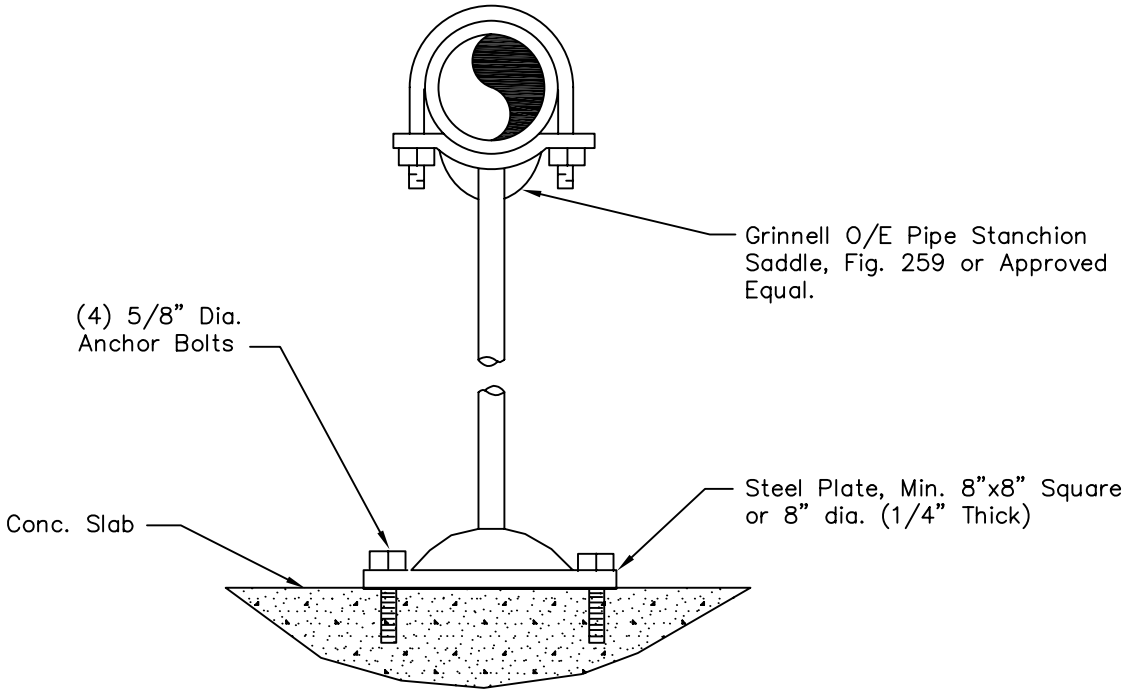

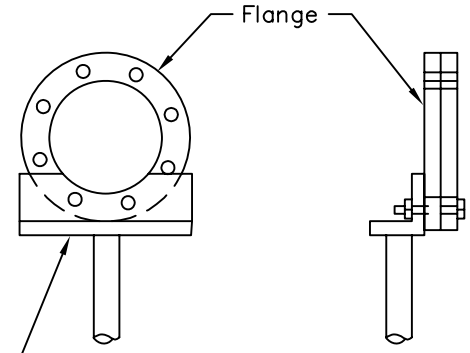

TAMPA WATER DEPARTMENT	APPROVED	REVISED	PIPE SUPPORTS	6.03

K:\Standard Details 02\604

NOTE: When required by the Department, the Contractor shall install a 4" or greater D.I.P. by-pass line, and shall be compensated under the appropriate pay items.

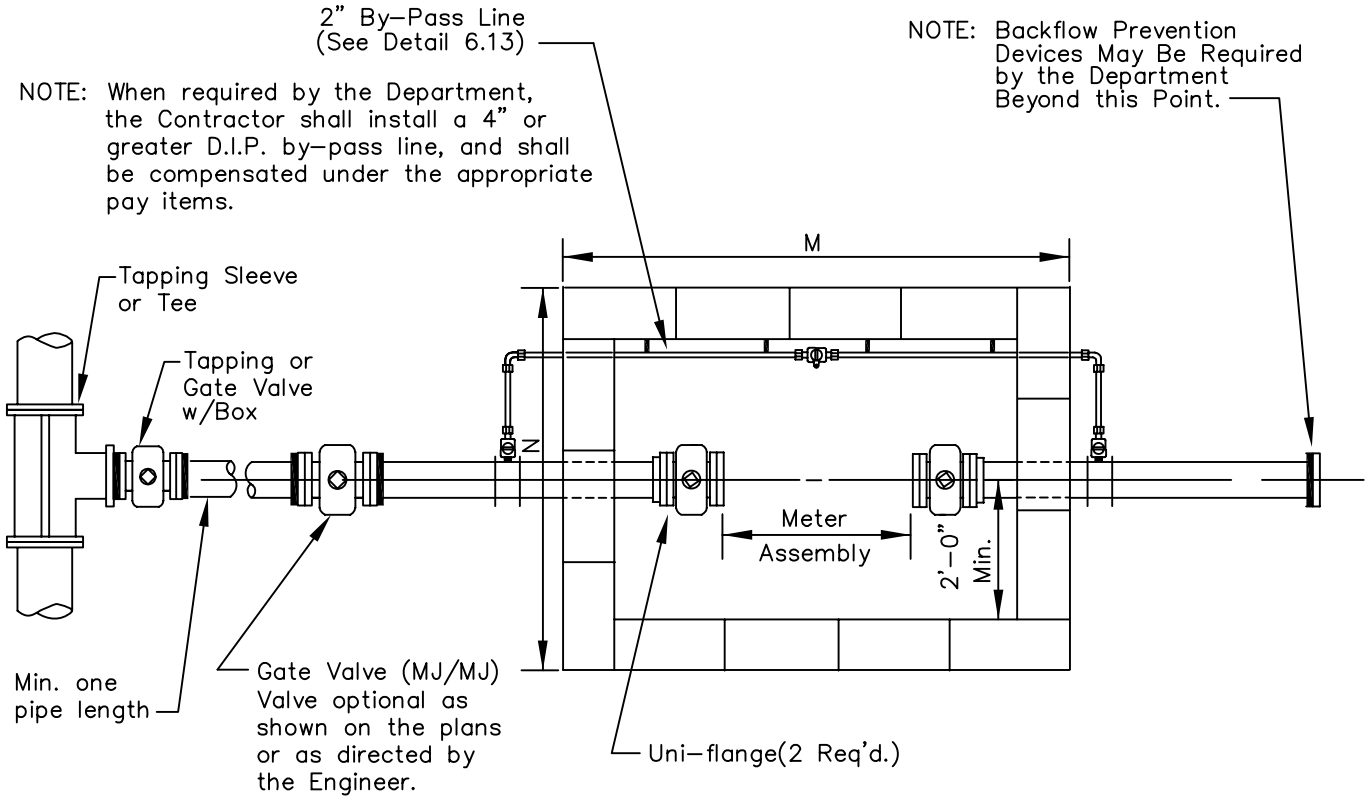

PLAN

NOTE: See Details 6.07 and 6.08 for Vault Details and Dimensions.

NOTE: CONSTRUCTION OF VAULT WITHOUT METER

1. Set uniflange at minimum distance from wall and attach isolation valves.
2. Span distance between isolation valves with single piece of pipe.
3. To install meter,remove pipe between valves and attach meter to one valve. Pipe shall be cut to size to span the distance between meter and second valve.

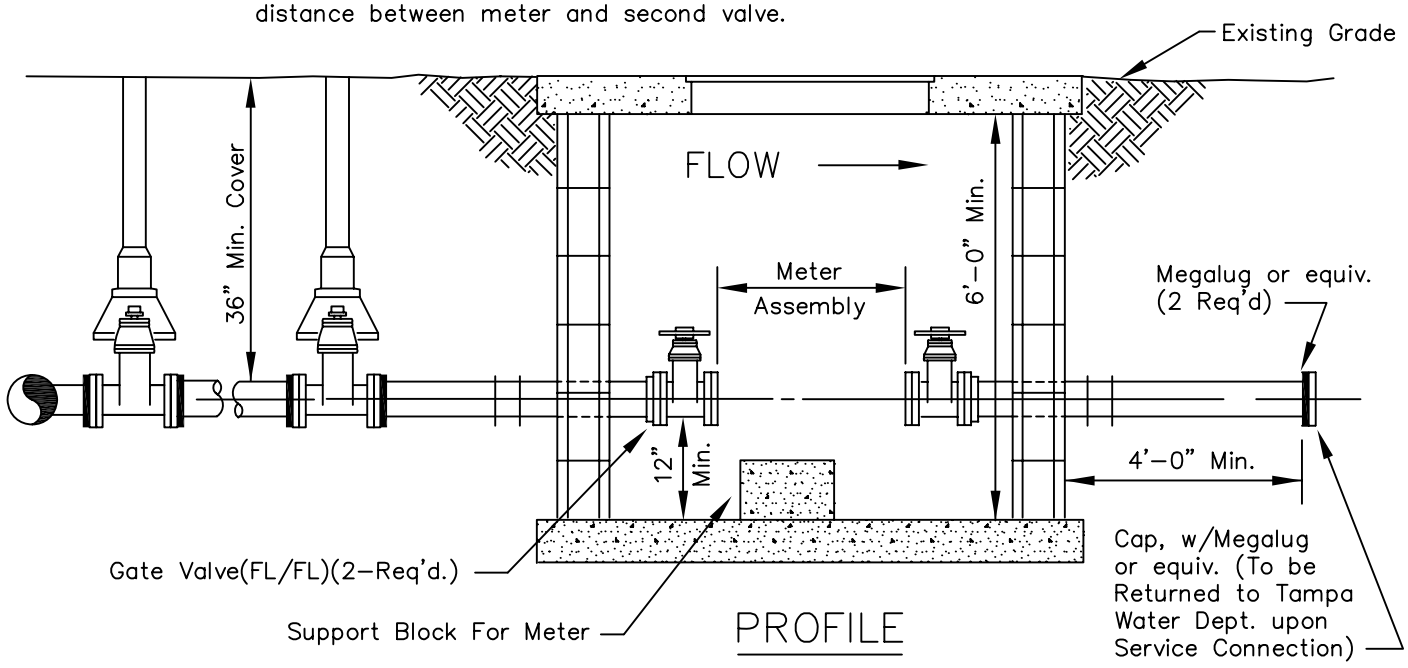

PROFILE

TAMPA WATER DEPARTMENT	APPROVED	REVISED	TURBINE METER IN VAULT	6.04

K:\Standard Details 02\605

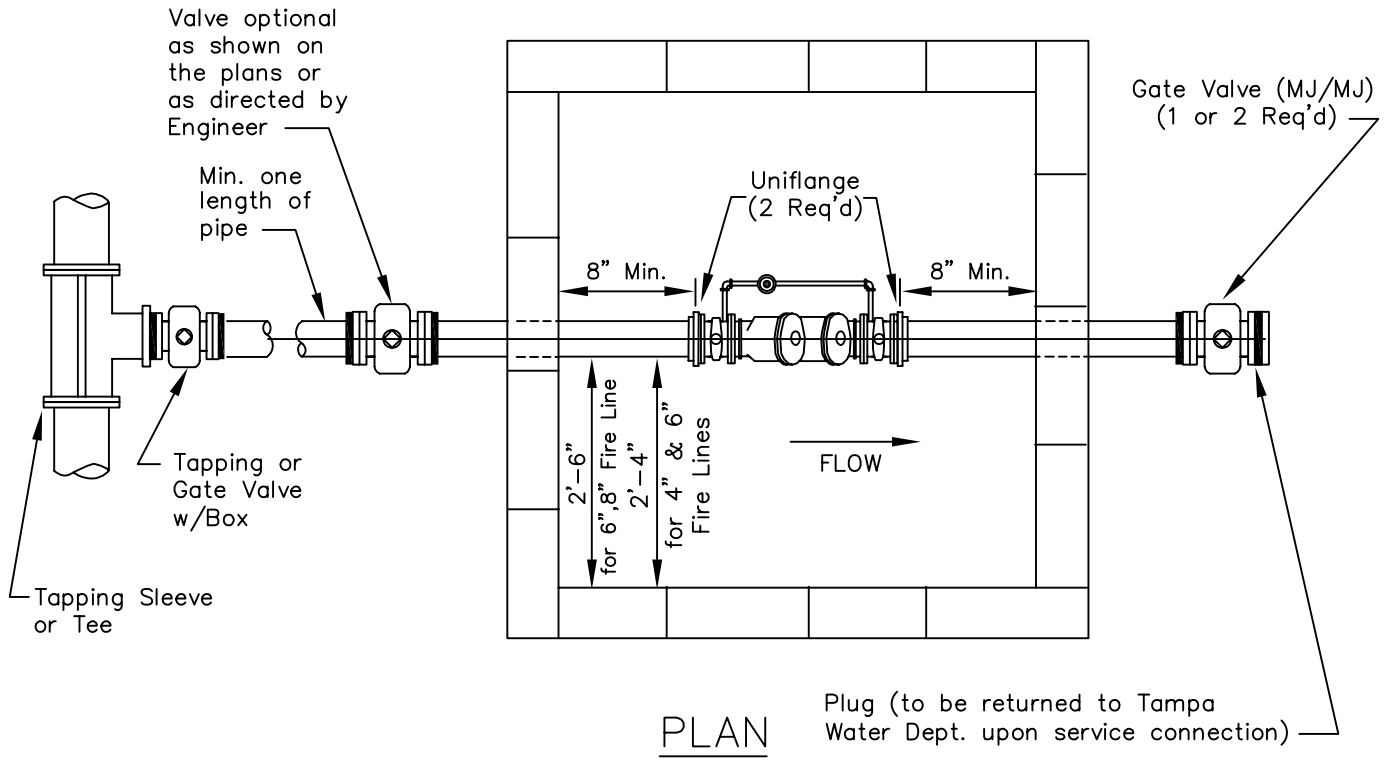

PLAN

NOTE: See Details 6.07 and 6.08 for Vault Details and Dimensions.

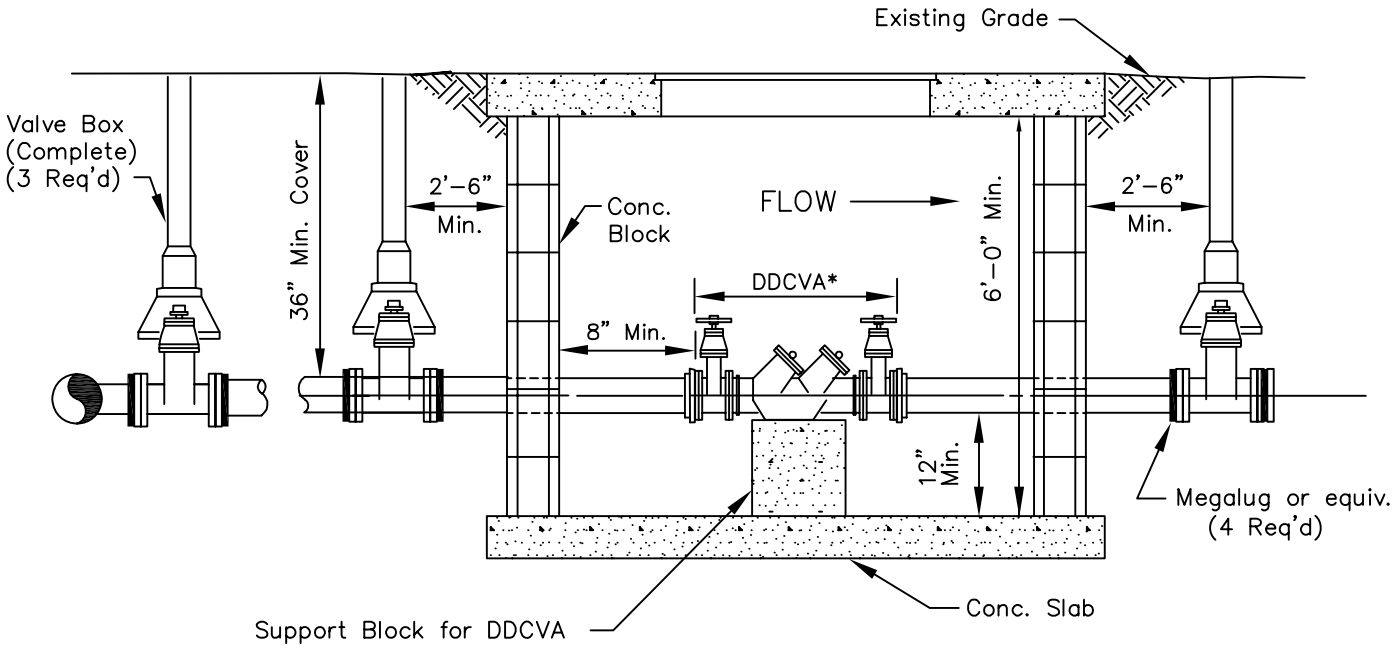

PROFILE

*See Tampa Water Dept. for Dimensions.

TAMPA WATER DEPARTMENT	APPROVED	REVISED	DOUBLE DETECTOR CHECK VALVE ASSEMBLY IN VAULT	6.05

K:\Standard Details 02\606

NOTE: When required by the Department, the Contractor shall install a 4" or greater D.I.P. by-pass line, and shall be compensated under the appropriate pay items.

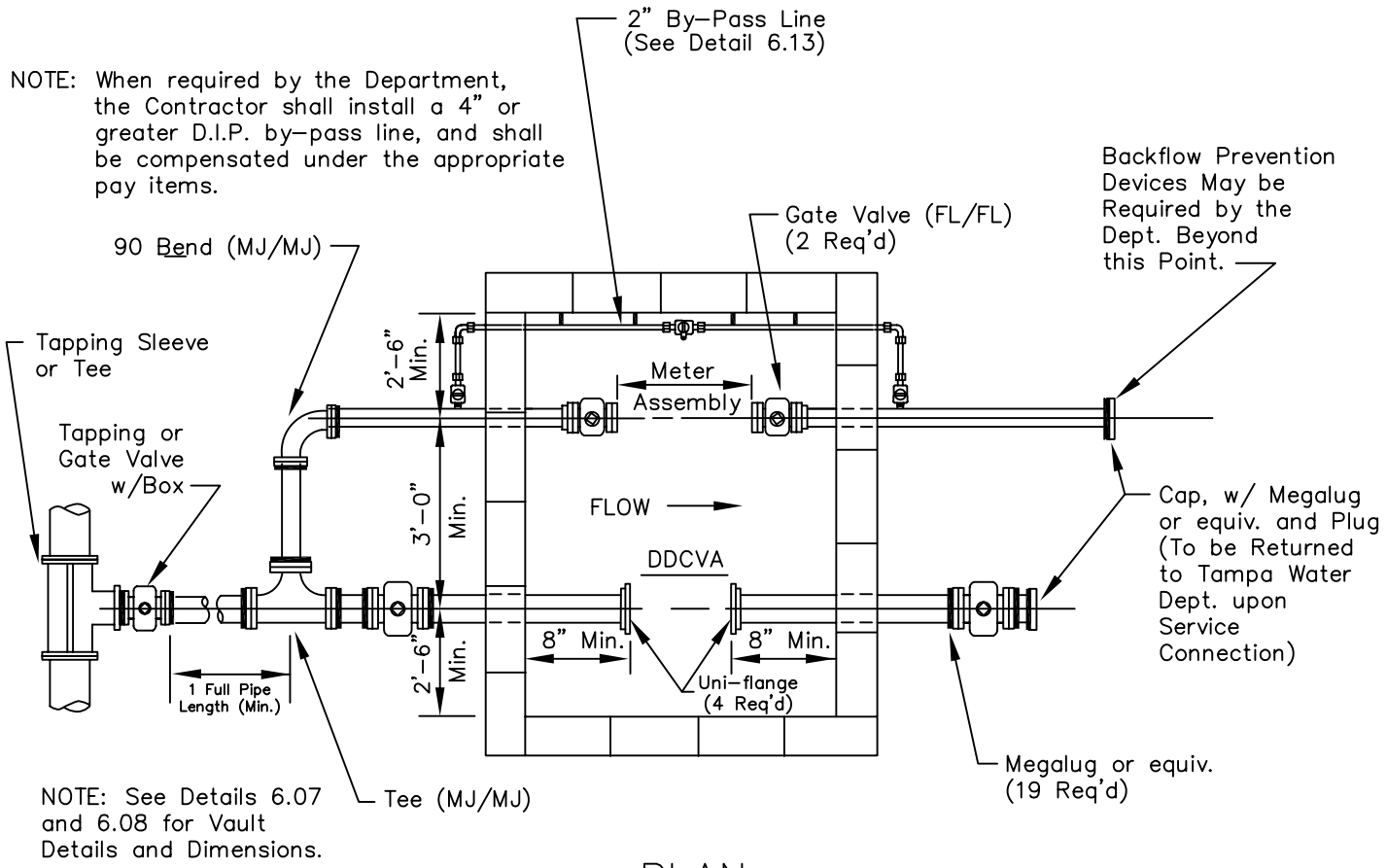

NOTE: See Details 6.07 and 6.08 for Vault Details and Dimensions.

PLAN

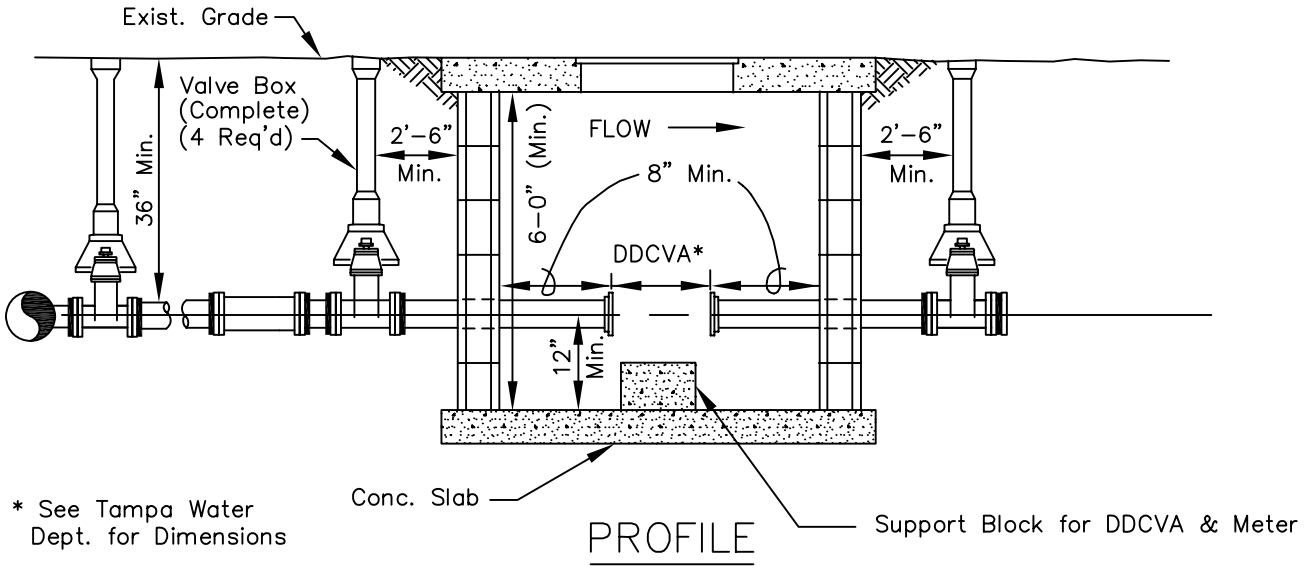

* See Tampa Water Dept. for Dimensions

PROFILE

NOTE: VAULT CONSTRUCTION WITHOUT METER

1. Set uniflange at minimum distance from wall and attach isolation valves.
2. Span between two isolation valves shall be a single piece of pipe through vault.
3. To install meter the pipe shall be cut to allow meter to be slipped into position and connected with 2 uniflanges

TAMPA WATER DEPARTMENT	APPROVED	REVISED	DOUBLE DETECTOR CHECK VALVE ASSEMBLY & 3"> DOMESTIC METERS IN VAULT	6.06

K:\Standard Details 02\607

	Top & Bottom Slab Size		Vault Size	
METER SIZE	K	L	M	N
3" & 4" Turbine/ Compound Meter	6'–4"	6'–4"	6'–0"	6'–0"
3",4",6",8" Turbine Meter	8'–4"	5'–8"	8'–0"	5'–4"
4" Double Detector Check	6'–4"	6'–4"	6'–0"	6'–0"
6" Double Detector Check	8'–4"	5'–8"	8'–0"	5'–4"
8" Double Detector Check	9'–8"	8'–4"	9–4"	8'–0"
10" Double Detector Check	11'–0"	8'–4"	10'–8"	8'–0"
4",6",8" DDCV & 3">Dom. Mtr.	8'–4"	9'–8"	8'–0"	9–4"
10" DDCV & 3">Dom. Mtr.	8'–4"	11'–0"	8'–0"	10'–8"

NOTE: Vault and Slab sizes may vary as directed by the Engineer.

VAULT DIMENSIONS

All Concrete Poured into Cells Shall be a Min. of 3,000 P.S.I. Strength

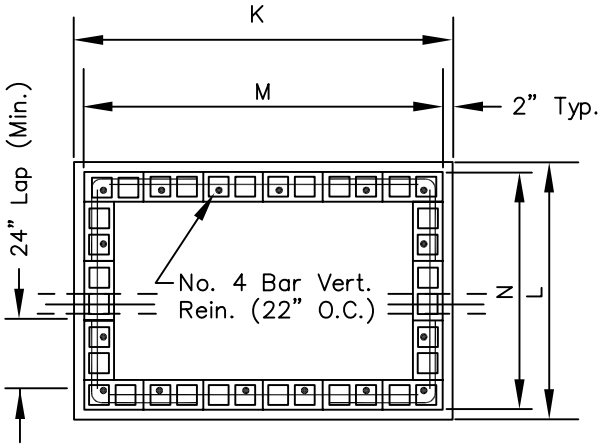

NOTE: Bituminous Type Material (1/2" Preformed Joint Material, Tar Paper) is to be Placed Between Pre–cast Slab and any Concrete Surfaces when Installed in Same

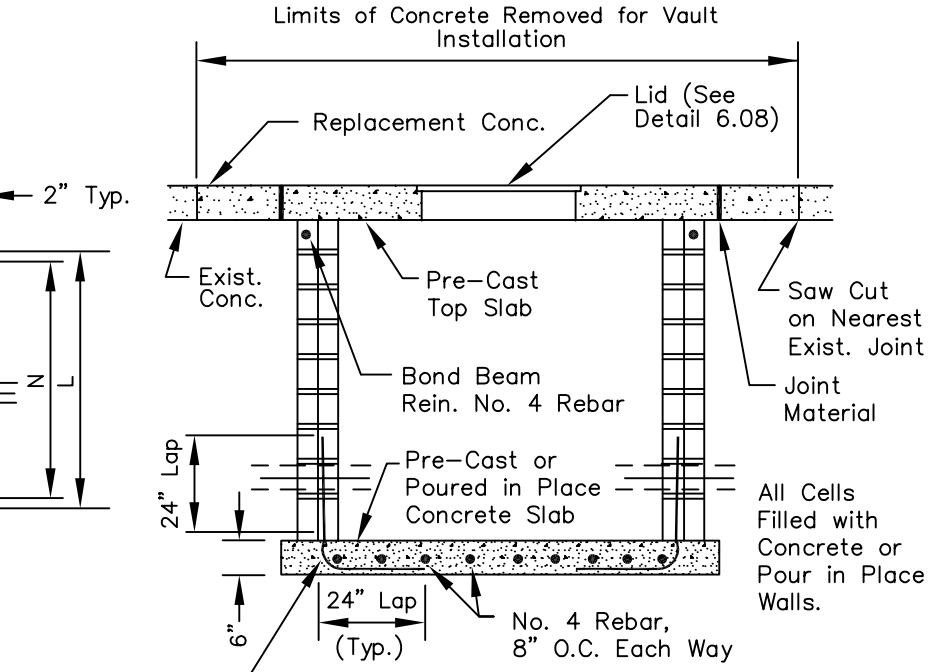

NOTE: No. 4 Rebar Dowels to be Eliminated when Pre–Cast Bottom Slab is Used.

TAMPA WATER DEPARTMENT	APPROVED	REVISED	VAULT CONSTRUCTION DETAIL	6.07

K:\Standard Details 02\608

SLAB SIZE			REBAR			
K	L	T	K		L	
			Size	Spacing	Size	Spacing
TOP SLAB						
6'–4"	6'–4"	6"	No. 6	7–1/2"	No. 6	7–1/2"
8'–4"	5'–8"	6"	No. 6	5–1/4"	No. 6	8–1/2"
9'–8"	8'–4"	8"	No. 6	5–1/8"	No. 6	6"
11'–0"	8'–4"	8"	No. 6	5–1/8"	No. 6	6"
BOTTOM SLAB						
6'–4"	6'–4"	6"	No. 4	8"	No. 4	8"
8'–4"	5'–8"	6"	No. 4	8"	No. 4	8"
9'–8"	8'–4"	6"	No. 4	8"	No. 4	8"
11'–0"	8'–4"	6"	No. 4	8"	No. 4	8"

Concrete– 4,500 PSI 28 Day Strength
Steel– 60,000 PSI Yield Strength

NOTE: Slab size may vary as determined by the Engineer.

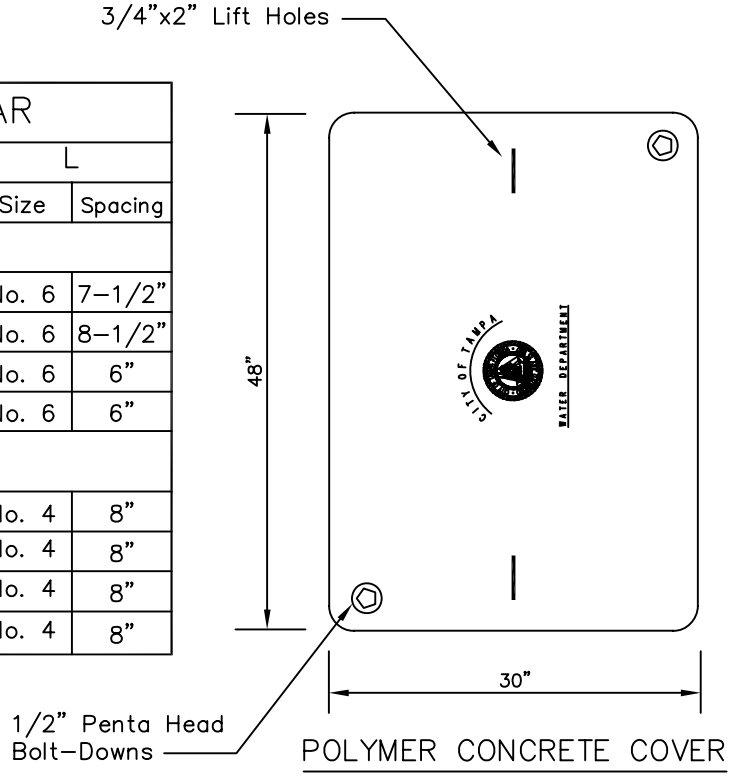

POLYMER CONCRETE COVER

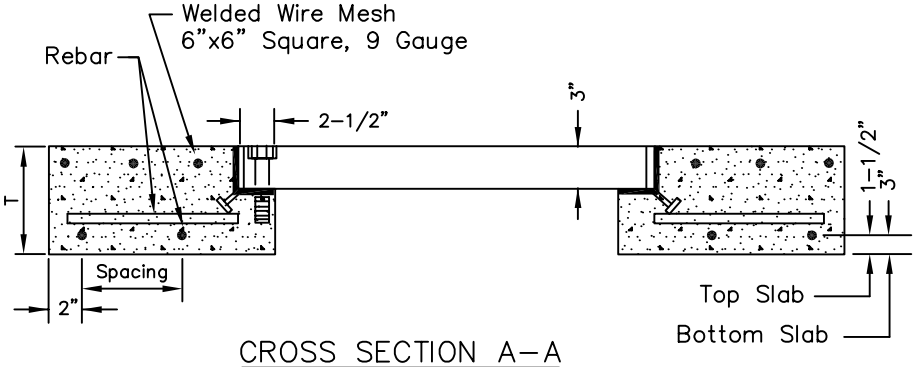

CROSS SECTION A–A

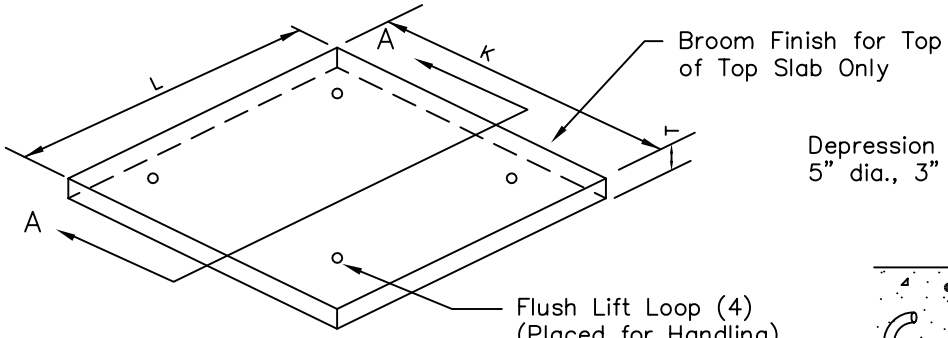

SLAB ISOMETRIC

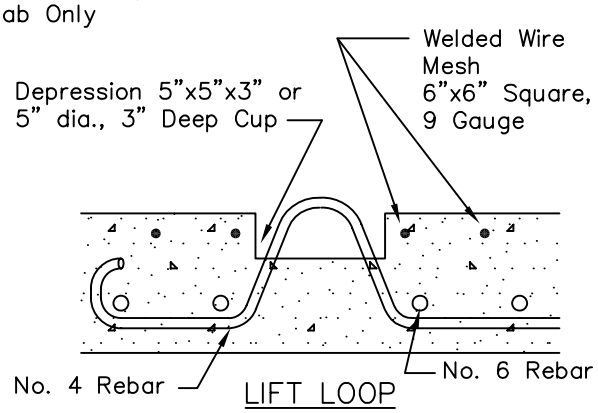

LIFT LOOP

TAMPA WATER DEPARTMENT	APPROVED	REVISED	VAULT CONCRETE SLAB DETAIL	6.08

TAMPA WATER DEPARTMENT

APPROVED

REVISED

TURBINE METER W/STRAINERS IN ABOVE GROUND VAULT

6.09

K:\Standard Details 02\609

NOTE: When required by the Department, the Contractor shall provide a 4" or greater D.I.P. by-pass line, and shall be compensated under the appropriate pay items.

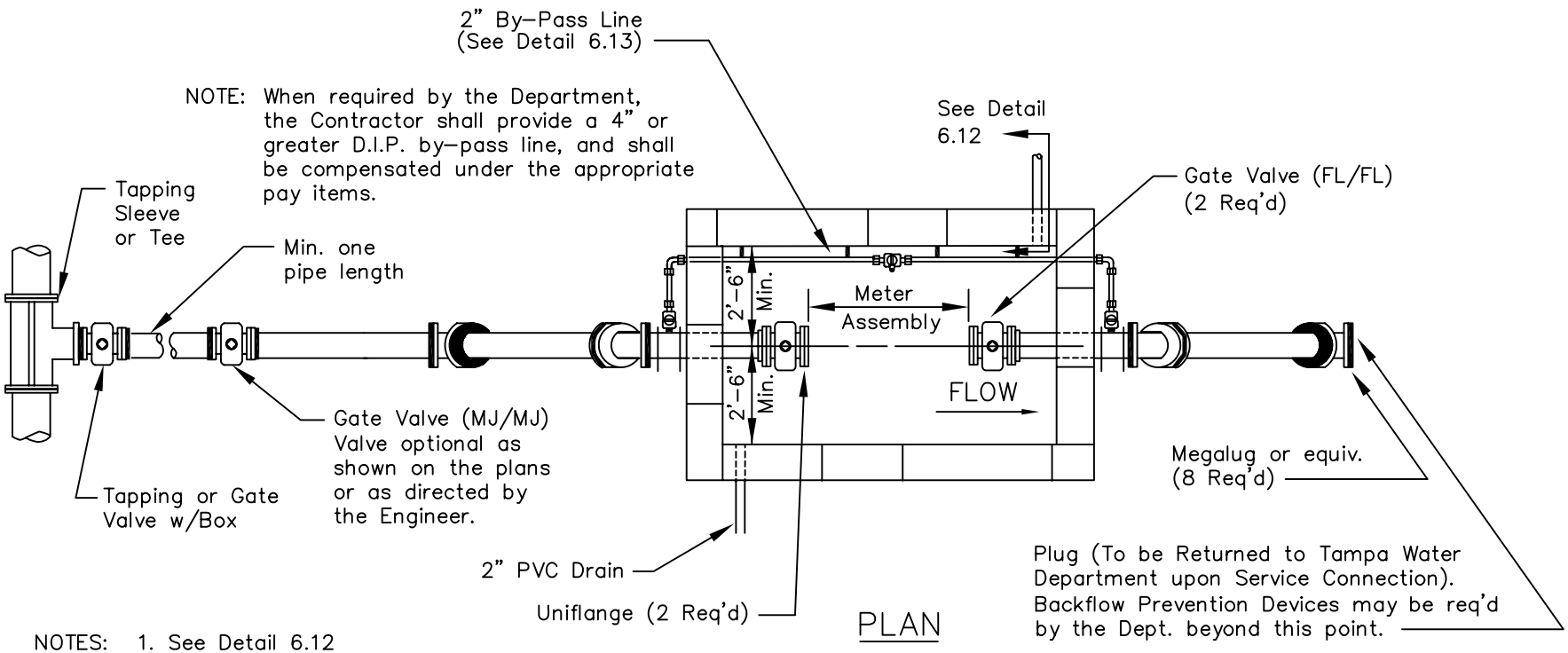

PLAN

NOTES:
1. See Detail 6.12 for Above Ground Vault Details
2. Minimum Clearance for All Internal and External Fittings Shall be 8" from All Walls

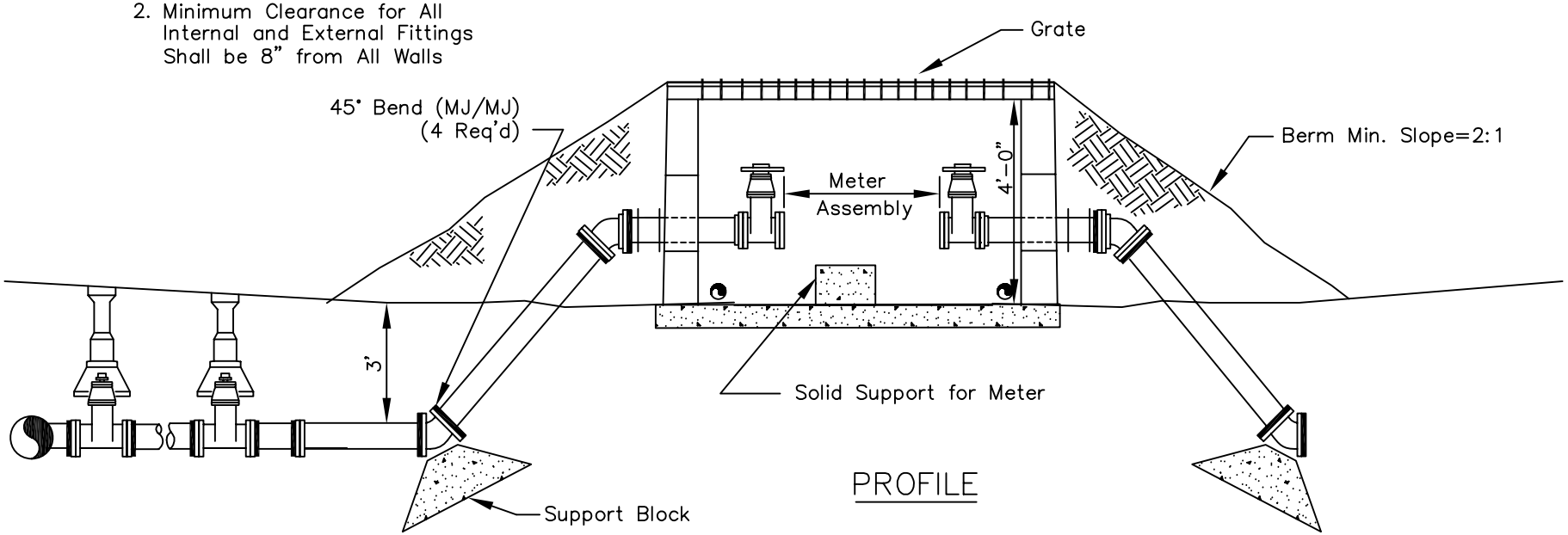

PROFILE

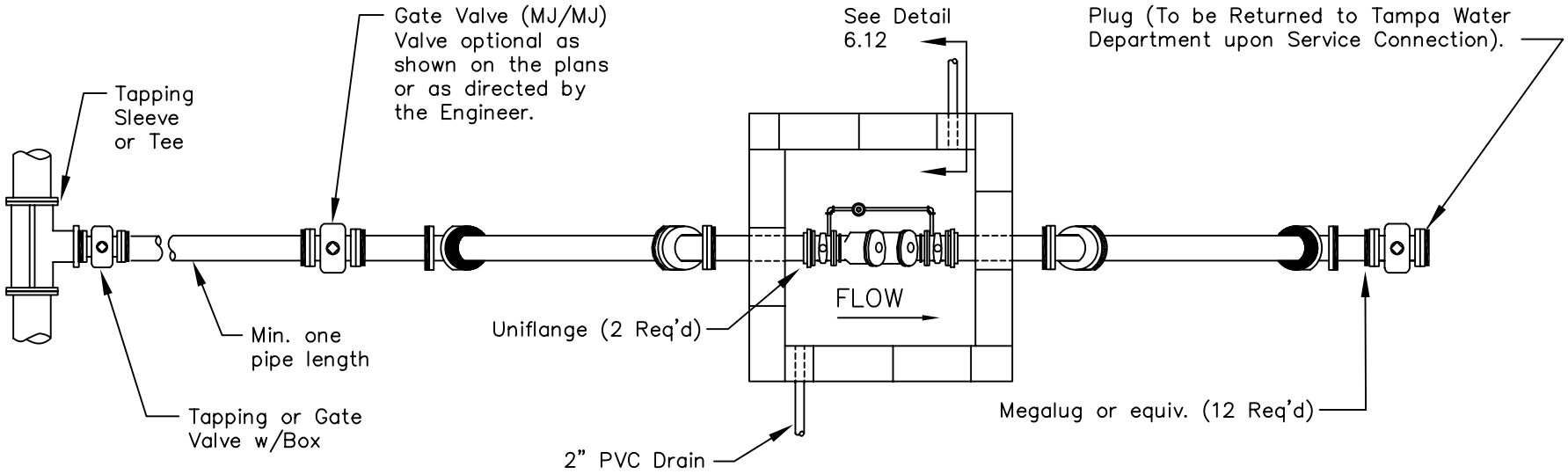

PLAN

NOTES:
1. See Detail 6.12 for Above Ground Vault Details
2. Minimum Clearance for All Internal and External Fittings Shall be 8" from All Walls

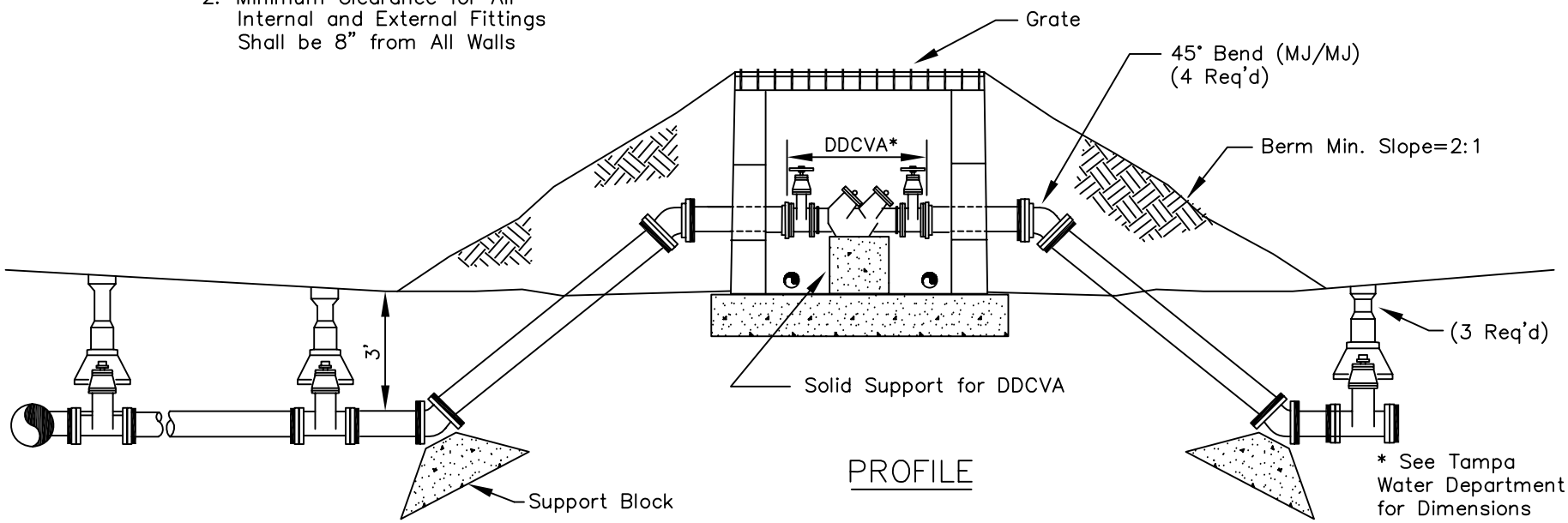

PROFILE

TAMPA WATER DEPARTMENT

APPROVED

REVISED

DOUBLE DETECTOR CHECK VALVE ASSEMBLY IN ABOVE GROUND VAULT

6.10

TAMPA WATER DEPARTMENT

APPROVED

REVISED

FIRE LINE SERVICE AND 3" ≥ DOMESTIC METERS IN ABOVE GROUND VAULT

6.11

K:\Standard Details 02\611

NOTE: When required by the Department, the Contractor shall provide a 4" or greater D.I.P. by-pass line, and shall be compensated under the appropriate pay items.

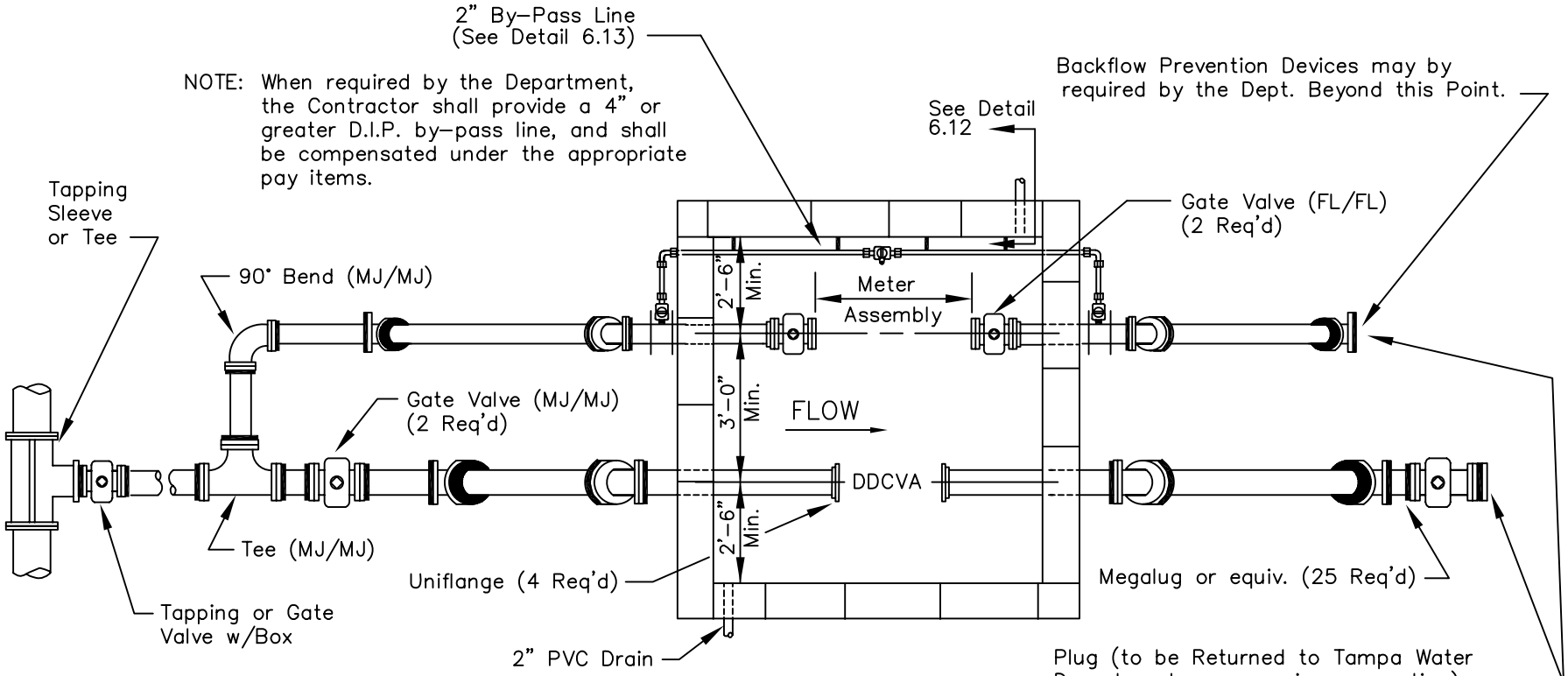

NOTES:
1. See Detail 6.12 for Above Ground Vault Details
2. Minimum Clearance for All Internal and External Fittings Shall be 8" from All Walls

PLAN

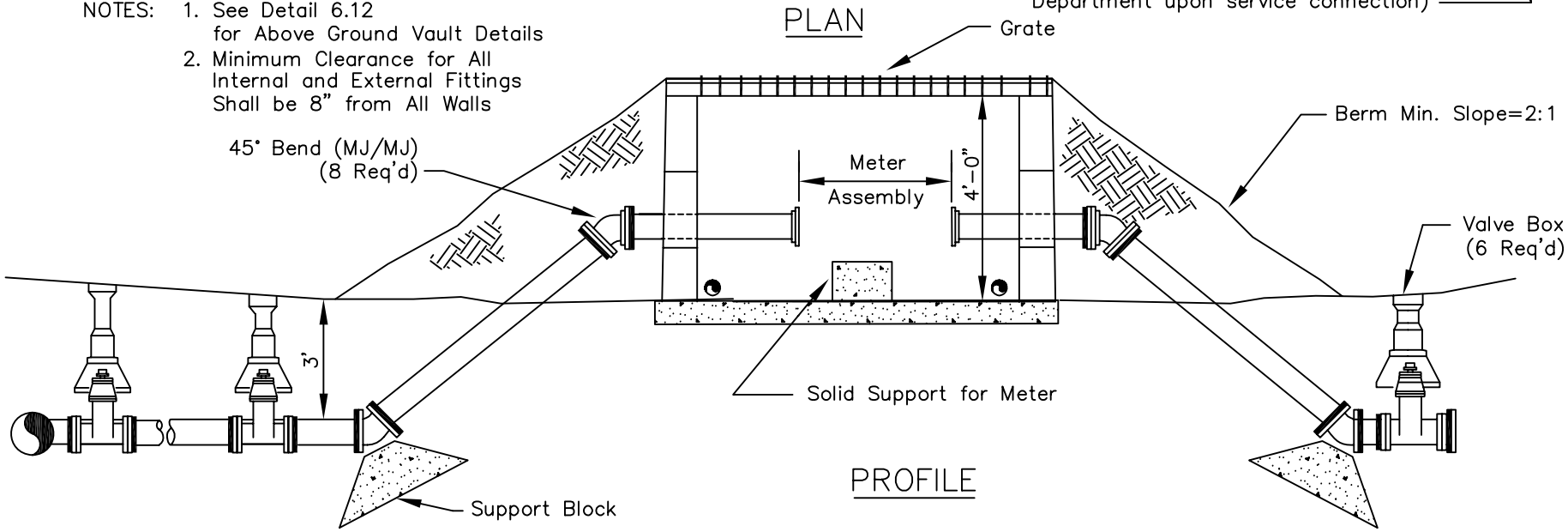

PROFILE

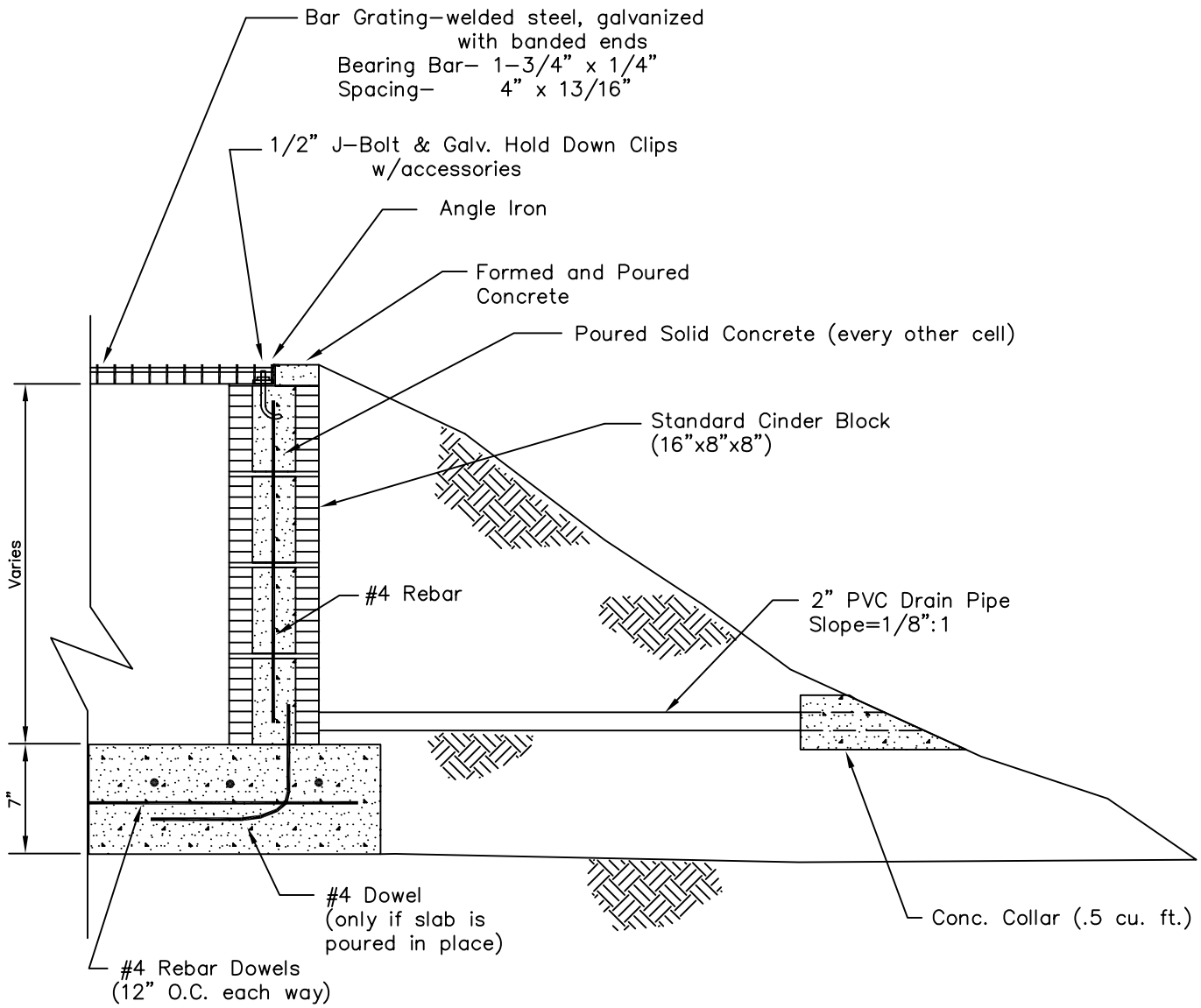

TYPICAL CROSS–SECTION DETAIL

NOTE:
All Concrete Shall Have a Min. Compressive Strength of 3000 psi in 28 Days.

TAMPA WATER DEPARTMENT	APPROVED	REVISED	ABOVE GROUND VAULT CROSS–SECTION	6.12

K:\Standard Details 02\613

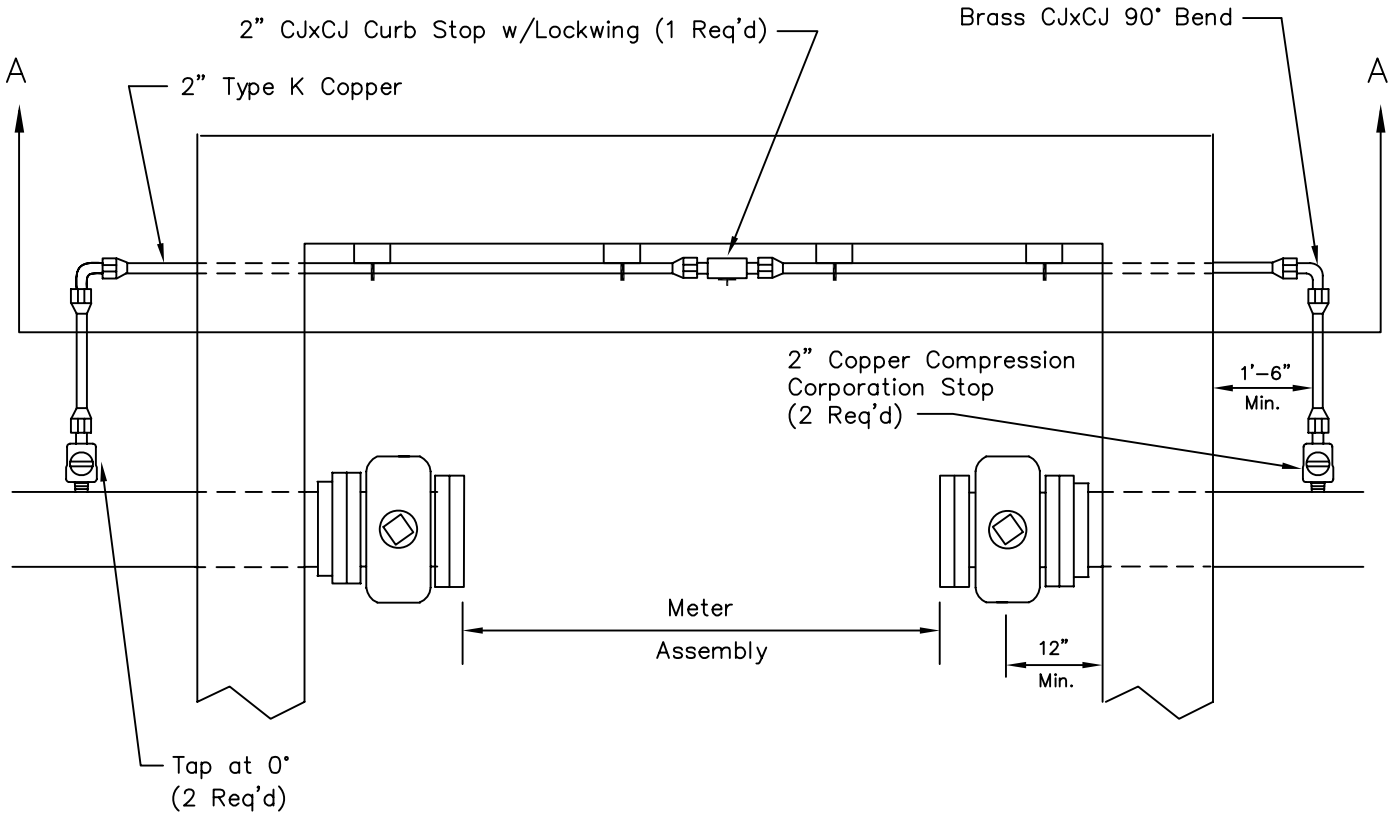

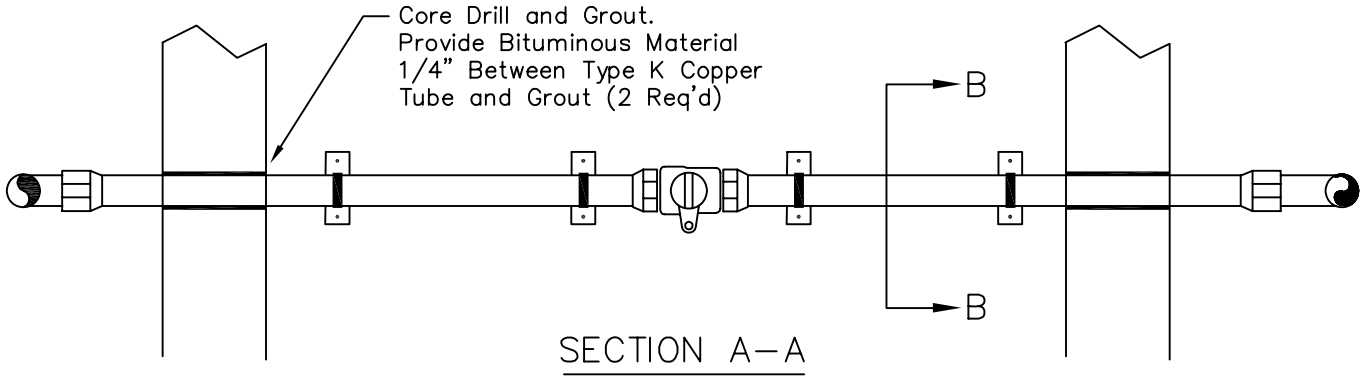

SECTION A–A

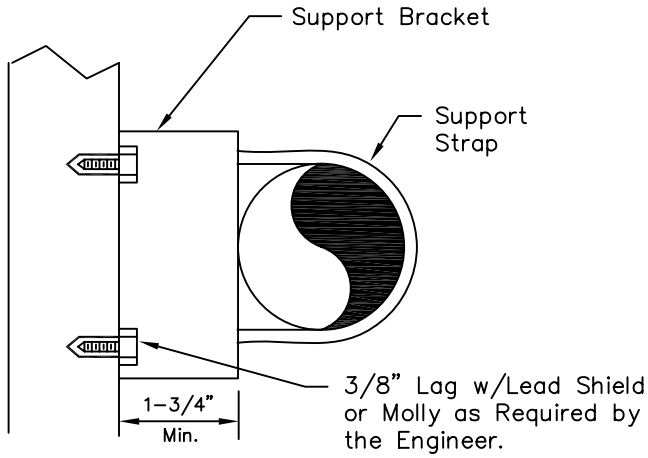

SECTION B–B

TAMPA WATER DEPARTMENT	APPROVED	REVISED	2" BY-PASS LINE	6.13

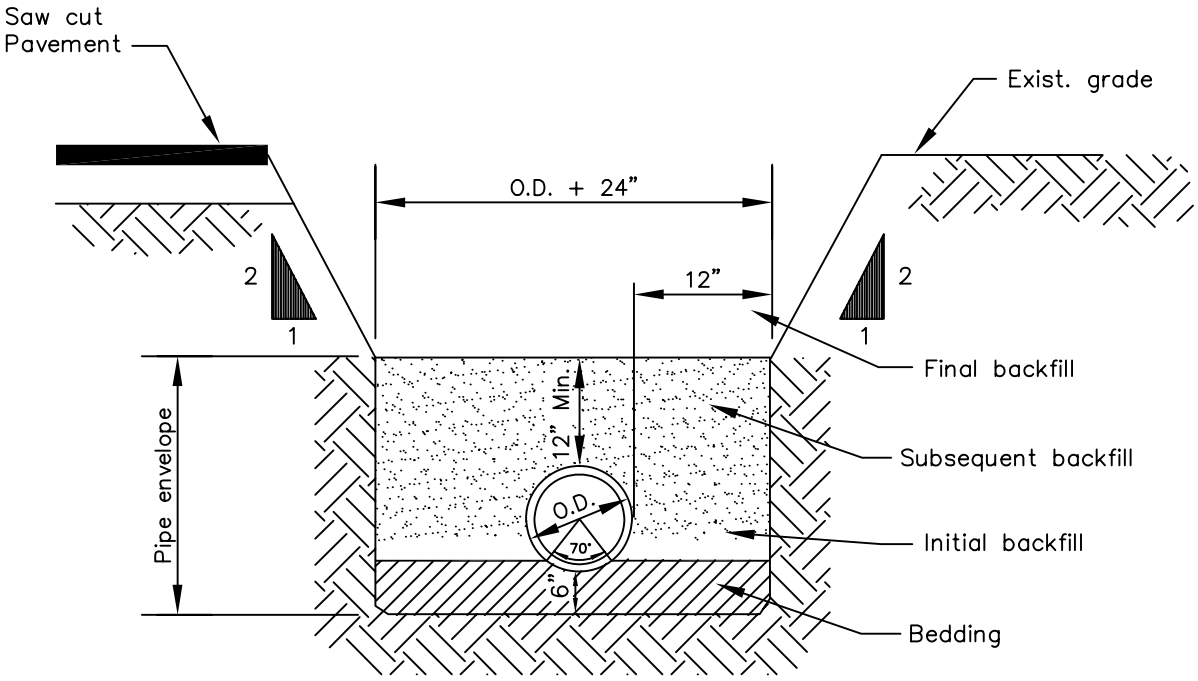

NOTES:

1. Pipe envelope bedding and backfill shall be compacted in 6" loose lifts.
2. Backfill above pipe envelope shall be compacted in 12" loose lifts maximum.
3. Backfill must be compacted to 95% modified proctor out of paved areas and 98% modified proctor in paved areas.

TAMPA WATER DEPARTMENT	APPROVED	REVISED	PIPE BEDDING AND TRENCH FOR PLASTIC PIPE	7.01

K:\Standard Details 02\702

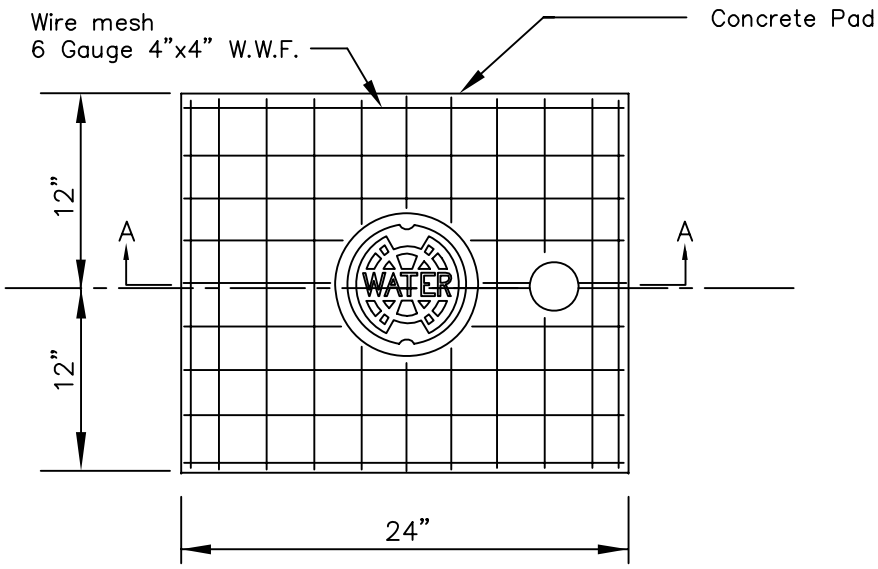

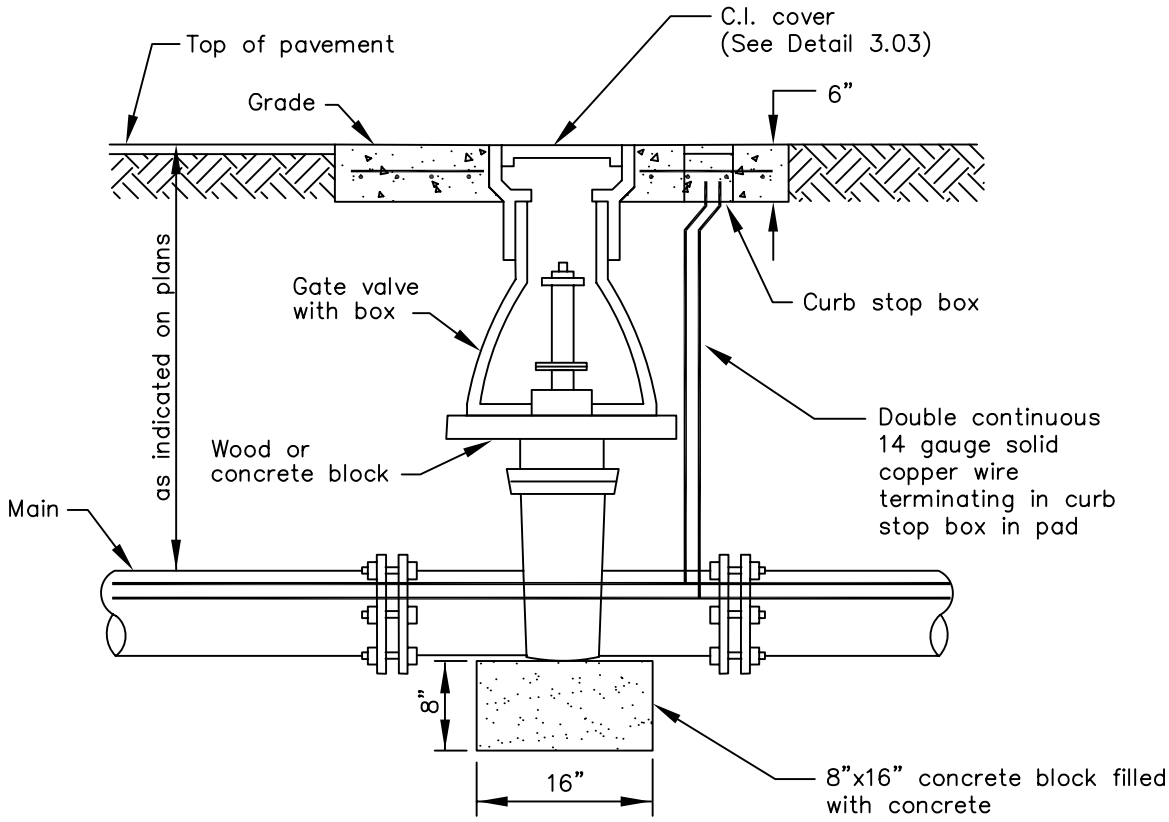

SECTION A–A

Notes :

1. Pad required for all applications.
2. Cast iron valve boxes shall be firmly supported and centered plumb over the operating nut of the valve by the contractor with valve box cover flush with the surface of the finished pavement or at such other level as may be directed.
3. Locate discs required for all valves.

NTS

TAMPA WATER DEPARTMENT	APPROVED	REVISED	VALVE SETTING ON PLASTIC PIPE DETAIL	7.02

K:\Standard Details 02\703

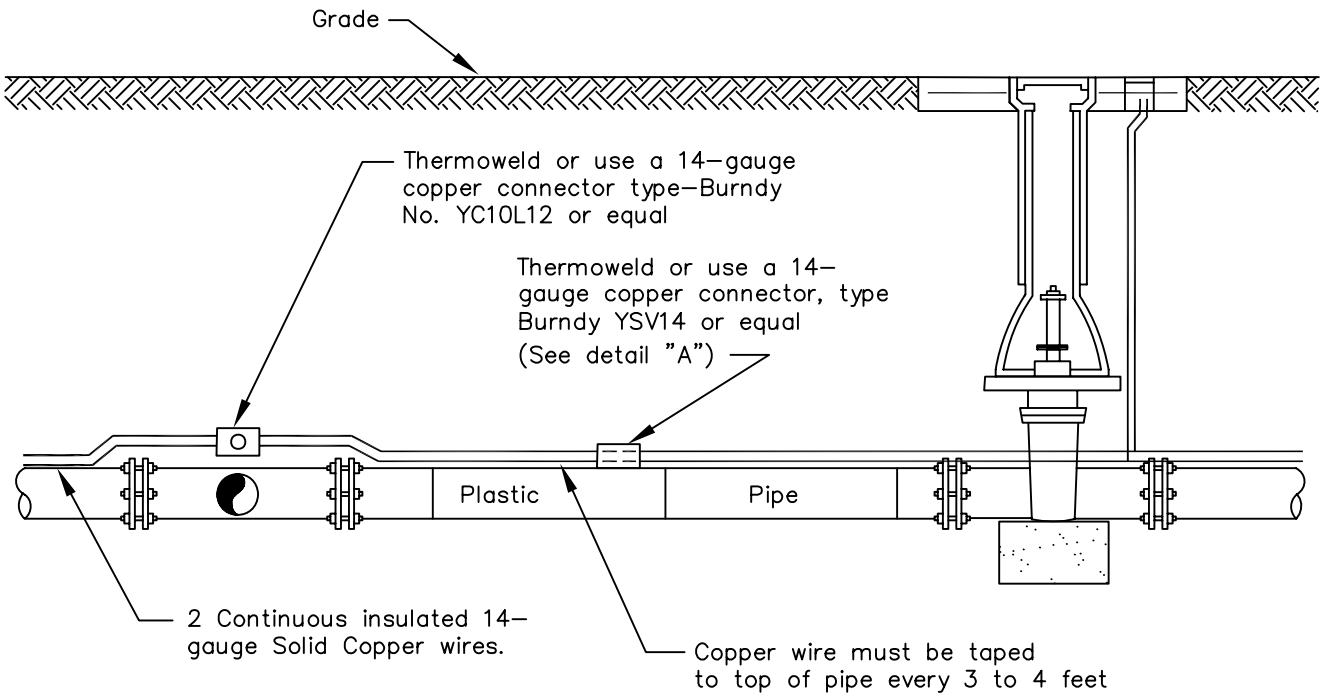

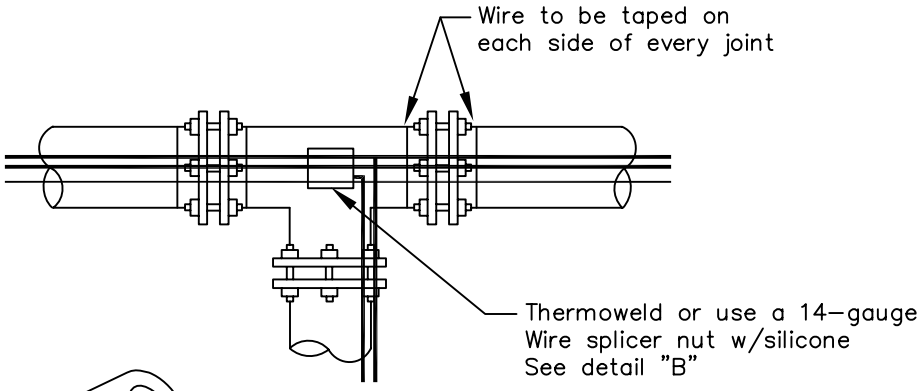

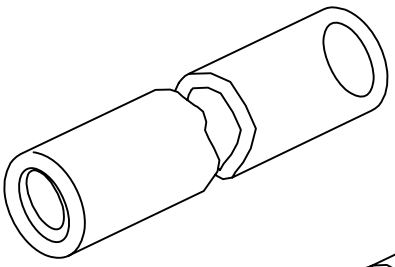

DETAIL "A"

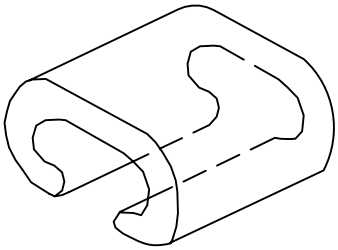

DETAIL "B"

NOTE:

All connections shall be sealed with a bituminous coating for corrosion protection

NTS

TAMPA WATER DEPARTMENT	APPROVED	REVISED	DOUBLE COPPER TRACER WIRE ON PVC PIPE	7.03

APPENDIX C

SAMPLE DEP PERMIT APPLICATION FORMS

NOTICE OF INTENT TO USE THE GENERAL PERMIT FOR CONSTRUCTION OF WATER MAIN EXTENSIONS FOR PWSs

INSTRUCTIONS: This notice shall be completed and submitted by persons proposing to construct projects permitted under the "General Permit for Construction of Water Main Extensions for Public Water Systems" in Rule 62-555.405, F.A.C. AT LEAST 30 DAYS BEFORE BEGINNING CONSTRUCTION OF A WATER MAIN EXTENSION PROJECT, complete and submit one copy of this notice to the appropriate Department of Environmental Protection District Office or Approved County Health Department (ACHD) along with payment of the proper permit processing fee. (When completed, Part II of this notice serves as the preliminary design report for a water main extension project, and thus, it is unnecessary to submit a separate preliminary design report or drawings, specifications, and design data with this notice.) All information provided in this notice shall be typed or printed in ink. The permit processing fee for projects requiring the services of a professional engineer during design is $250, and the permit processing fee for projects not requiring the services of a professional engineer during design is $100.* Checks for permit processing fees shall be made payable to the Department of Environmental Protection or the appropriate ACHD. NOTE THAT A SEPARATE NOTIFICATION AND A SEPARATE PERMIT PROCESSING FEE ARE REQUIRED FOR EACH NON-CONTIGUOUS PROJECT.†

* *Except as noted in paragraphs 62-555.520(3)(a) and (b), F.A.C., projects shall be designed under the responsible charge of one or more professional engineers licensed in Florida.*

† *Non-contiguous projects are projects that are neither interconnected nor located nearby one another (i.e., on the same site, on adjacent streets, or in the same neighborhood).*

I. General Project Information

A. Name of Project: _____ (City Water Dept WO#)

B. Description of Project and Its Purpose: *(Description of public water project, as required by Health Department)*

C. Location of Project
1. County Where Project Located: _____
2. Description of Project Location: _____

D. Estimate of Cost to Construct Project: *(est construction costs for water facilites being permitted)*

E. Estimate of Dates for Starting and Completing Construction of Project: *(est construction dates for permitted water facilites)*

F. Permittee

PWS/Company Name:	PWS Identification No.:*	
PWS Type:* ☐ Community ☐ Non-Transient Non-Community ☐ Transient Non-Community ☐ Consecutive		
Contact Person:	Contact Person's Title:	
Contact Person's Mailing Address:		
City:	State:	Zip Code:
Contact Person's Telephone Number:	Contact Person's Fax Number:	
Contact Person's E-Mail Address:		

* *This information is required only if the permittee is a public water system (PWS).*

G. Public Water System (PWS) Supplying Water to Project

PWS Name: Tampa Water Department	PWS Identification No.: 6290327	
PWS Type: ☒ Community ☐ Non-Transient Non-Community ☐ Transient Non-Community ☐ Consecutive		
PWS Owner: City Of Tampa		
Contact Person: Chris Barquin	Contact Person's Title: Chief Design Engineer	
Contact Person's Mailing Address: 306 E. Jackson Street, 5 E		
City: Tampa	State: Florida	Zip Code: 33602
Contact Person's Telephone Number: (813) 274-8678	Contact Person's Fax Number: (813) 274-7435	
Contact Person's E-Mail Address: Chris.Barquin@Tampagov.net		

SAMPLE

NOTICE OF INTENT TO USE THE GENERAL PERMIT FOR CONSTRUCTION OF WATER MAIN EXTENSIONS FOR PWSs

Project Name:	Permittee:

H. Public Water System (PWS) that Will Own Project After It Is Placed into Permanent Operation

PWS Name: Tampa Water Department	PWS Identification No.:* 6290327	
PWS Type:* ☒ Community ☐ Non-Transient Non-Community ☐ Transient Non-Community ☐ Consecutive		
PWS Owner: City Of Tampa		
Contact Person: Chris Barquin	Contact Person's Title: Chief Design Engineer	
Contact Person's Mailing Address: 306 E. Jackson St., 5 E		
City: Tampa	State: Florida	Zip Code: 33602
Contact Person's Telephone Number: (813) 274-8678	Contact Person's Fax Number: (813) 274-7435	
Contact Person's E-Mail Address: Chris.Barquin@Tampagov.net		

* *This information is required only if the owner/operator is an existing PWS.*

I. Professional Engineer(s) or Other Person(s) in Responsible Charge of Designing Project*

Company Name: *(Developer's Engineer)*		
Designer(s):	Title(s) of Designer(s):	
Qualifications of Designer(s): ☐ Professional Engineer(s) Licensed in Florida – License Number(s): ☐ Public Officer(s) Employed by State, County, Municipal, or Other Governmental Unit of State† ☐ Plumbing Contractor(s) Licensed in Florida – License Number(s):^		
Mailing Address of Designer(s):		
City:	State:	Zip Code:
Telephone Number of Designer(s):	Fax Number of Designer(s):	
E-Mail Address(es) of Designer(s):		

* *Except as noted in paragraphs 62-555.520(3)(a) and (b), F.A.C., projects shall be designed under the responsible charge of one or more professional engineers licensed in Florida.*

† *Attach a detailed construction cost estimate showing that the cost to construct this project is $10,000 or less.*

^ *Attach documentation showing that this project will be installed by the plumbing contractor(s) designing this project, documentation showing that this project involves a public water system serving a single property and fewer than 250 fixture units, and a detailed construction cost estimate showing that the cost to construct this project is $50,000 or less.*

II. Preliminary Design Report for Project*

A. Service Area, Water Use, and Service Pressure Information

1. Design Type and Number of Service Connections, and Average Daily Water Demands and Maximum-Day Water Demands, in the Entire Area to Be Served by the Water Mains Being Constructed Under this Project:

A = Type of Service Connection	B = Number of Service Connections	C = Average Daily Water Demand Per Service Connection, gpd	D = Total Average Daily Water Demand[a], gpd (Columns BxC for Residential Service Connections)	E = Total Maximum-Day Water Demand[b], gpd
Single-Family Home				
Mobile Home				
Apartment				
Commercial, Institutional, or Industrial Facility[a]				
Total				

a. Description of Commercial, Institutional, or Industrial Facilities and Explanation of Method(s) Used to Estimate Average Daily Water Demand for These Facilities:_____

b. Explanation of Peaking Factor(s) or Method(s) Used to Estimate Maximum-Day Water Demand:_____

SAMPLE

NOTICE OF INTENT TO USE THE GENERAL PERMIT FOR CONSTRUCTION OF WATER MAIN EXTENSIONS FOR PWSs

Project Name:	Permittee:

2. Explanation of Peaking Factor(s) or Method(s) Used to Estimate Design Peak-Hour Water Demand and, for Small Water Systems that Use Hydropneumatic Tanks or that Are Not Designed to Provide Fire Protection, Peak Instantaneous Water Demand:_____

3. Design Fire-Flow Rate and Duration:_____

4. Design Service Pressure Range:_____

B. Project Site Information

1. ATTACH A SITE PLAN OR SKETCH SHOWING THE SIZE AND APPROXIMATE LOCATION OF NEW OR ALTERED WATER MAINS, SHOWING THE APPROXIMATE LOCATION OF HYDRANTS, VALVES, METERS, AND BLOW-OFFS IN SAID MAINS, AND SHOWING HOW SAID MAINS CONNECT TO THE PUBLIC WATER SYSTEM SUPPLYING WATER FOR THE PROJECT.
2. Description of Any Areas Where New or Altered Water Mains Will Cross Above or Under Surface Water or Be Located in Soil that Is Known to Be Aggressive:_____

C. Information About Compliance with Design and Construction Requirements

1. If this project is being designed to comply with the following requirements, initial before the requirements. If any of the following requirements do not apply to this project or if this project includes exceptions to any of the following requirements as allowed by rule, mark "NA" before the requirements and complete Part II.C.2 below. *RSWW = Recommended Standards for Water Works* as incorporated into Rule 62-555.330, F.A.C.

_____ a. This project is being designed to keep existing water mains and service lines in operation during construction or to minimize interruption of water service during construction. [*RSWW* 1.3.a; exceptions allowed under FAC 62-555.330]

_____ b. All pipe, pipe fittings, pipe joint packing and jointing materials, valves, fire hydrants, and meters installed under this project will conform to applicable American Water Works Association (AWWA) standards. [FAC 62-555.320(21)(b), *RSWW* 8.0, and AWWA standards as incorporated into FAC 62-555.330; exceptions allowed under FAC 62-555.320(21)(c)]

_____ c. All public water system components, excluding fire hydrants, that will be installed under this project and that will come into contact with drinking water will conform to NSF International Standard 61 as adopted in Rule 62-555.335, F.A.C., or other applicable standards, regulations, or requirements referenced in paragraph 62-555.320(3)(b), F.A.C. [FAC 62-555.320(3)(b); exceptions allowed under FAC 62-555.320(3)(d)]

_____ d. All pipe and pipe fittings installed under this project will contain no more than 8.0% lead, and any solder or flux used in this project will contain no more than 0.2% lead. [FAC 62-555.322]

_____ e. All pipe and pipe fittings installed under this project will be color coded or marked in accordance with subparagraph 62-555.320(21)(b)3, F.A.C., using blue as a predominant color. (Underground plastic pipe will be solid-wall blue pipe, will have a co-extruded blue external skin, or will be white or black pipe with blue stripes incorporated into, or applied to, the pipe wall; and underground metal or concrete pipe will have blue stripes applied to the pipe wall. Pipe striped during manufacturing of the pipe will have continuous stripes that run parallel to the axis of the pipe, that are located at no greater than 90-degree intervals around the pipe, and that will remain intact during and after installation of the pipe. If tape or paint is used to stripe pipe during installation of the pipe, the tape or paint will be applied in a continuous line that runs parallel to the axis of the pipe and that is located along the top of the pipe; for pipe with an internal diameter of 24 inches or greater, tape or paint will be applied in continuous lines along each side of the pipe as well as along the top of the pipe. Aboveground pipe will be painted blue or will be color coded or marked like underground pipe.) [FAC 62-555.320(21)(b)3]

_____ f. All new or altered water mains included in this project are sized after a hydraulic analysis based on flow demands and pressure requirements. ATTACH A HYDRAULIC ANALYSIS JUSTIFYING THE SIZE OF ANY NEW OR ALTERED WATER MAINS WITH AN INSIDE DIAMETER OF LESS THAN THREE INCHES. [FAC 62-555.320(21)(b) and *RSWW* 8.1]

SAMPLE

NOTICE OF INTENT TO USE THE GENERAL PERMIT FOR CONSTRUCTION OF WATER MAIN EXTENSIONS FOR PWSs

Project Name:	Permittee:

_____ g. The inside diameter of new or altered water mains that are included in this project and that are being designed to provide fire protection and serve fire hydrants will be at least six inches. [FAC 62-555.320(21)(b) and *RSWW* 8.1.2]

_____ h. New or altered water mains that are included in this project and that are not being designed to carry fire flows do not have fire hydrants connected to them. [FAC 62-555.320(21)(b) and *RSWW* 8.1.5]

_____ i. This project is being designed to minimize dead-end water mains by making appropriate tie-ins where practical. [FAC 62-555.320(21)(b) and *RSWW* 8.1.6.a]

_____ j. New or altered dead-end water mains included in this project will be provided with a fire or flushing hydrant or blow-off for flushing purposes. [FAC 62-555.320(21)(b) and *RSWW* 8.1.6.b]

_____ k. Sufficient valves will be provided on new or altered water mains included in this project so that inconvenience and sanitary hazards will be minimized during repairs. [FAC 62-555.320(21)(b) and *RSWW* 8.2]

_____ l. New or altered fire hydrant leads included in this project will have an inside diameter of at least six inches and will include an auxiliary valve. [FAC 62-555.320(21)(b) and *RSWW* 8.3.3]

_____ m. All fire hydrants that will be installed under this project and that will have unplugged, underground drains will be located at least three feet from any existing or proposed storm sewer, stormwater force main, pipeline conveying reclaimed water regulated under Part III of Chapter 62-610, F.A.C., or vacuum-type sanitary sewer; at least six feet from any existing or proposed gravity- or pressure-type sanitary sewer, wastewater force main, or pipeline conveying reclaimed water not regulated under Part III of Chapter 62-10, F.A.C.; and at least ten feet from any existing or proposed "on-site sewage treatment and disposal system." [FAC 62-555.314(4)]

_____ n. At high points where air can accumulate in new or altered water mains included in this project, provisions will be made to remove the air by means of air relief valves, and automatic air relief valves will not be used in situations where flooding of the valve manhole or chamber may occur. [FAC 62-555.320(21)(b) and *RSWW* 8.4.1]

_____ o. The open end of the air relief pipe from all automatic air relief valves installed under this project will be extended to at least one foot above grade and will be provided with a screened, downward-facing elbow. [FAC 62-555.320(21)(b) and *RSWW* 8.4.2]

_____ p. New or altered chambers, pits, or manholes that contain valves, blow-offs, meters, or other such water distribution system appurtenances and that are included in this project will not be connected directly to any sanitary or storm sewer, and blow-offs or air relief valves installed under this project will not be connected directly to any sanitary or storm sewer. [FAC 62-555.320(21)(b) and *RSWW* 8.4.3]

_____ q. New or altered water mains included in this project will be installed in accordance with applicable AWWA standards or in accordance with manufacturers' recommended procedures. [FAC 62-555.320(21)(b), *RSWW* 8.5.1, and AWWA standards as incorporated into FAC 62-555.330]

_____ r. A continuous and uniform bedding will be provided in trenches for underground pipe installed under this project; backfill material will be tamped in layers around underground pipe installed under this project and to a sufficient height above the pipe to adequately support and protect the pipe; and unsuitably sized stones (as described in applicable AWWA standards or manufacturers' recommended installation procedures) found in trenches will be removed for a depth of at least six inches below the bottom of underground pipe installed under this project. [FAC 62-555.320(21)(b), *RSWW* 8.5.2]

_____ s. All water main tees, bends, plugs, and hydrants installed under this project will be provided with thrust blocks or restrained joints to prevent movement. [FAC 62-555.320(21)(b) and *RSWW* 8.5.4]

_____ t. New or altered water mains that are included in this project and that will be constructed of asbestos-cement or polyvinyl chloride pipe will be pressure and leakage tested in accordance with AWWA Standard C603 or C605, respectively, as incorporated into Rule 62-555.330, F.A.C., and all other new or altered water mains included in this project will be pressure and leakage tested in accordance with AWWA Standard C600 as incorporated into Rule 62-555.330. [FAC 62-555.320(21)(b)1 and AWWA standards as incorporated into FAC 62-555.330]

_____ u. New or altered water mains, including fire hydrant leads and including service lines that will be under the control of a public water system and that have an inside diameter of three inches or greater, will be disinfected and bacteriologically evaluated in accordance with Rule 62-555.340, F.A.C. [FAC 62-555.320(21)(b)2 and FAC 62-555.340]

_____ v. New or altered water mains that are included in this project and that will be installed in areas where there are known aggressive soil conditions will be protected through use of corrosion-resistant water main materials, through encasement of the water mains in polyethylene, or through provision of cathodic protection. [FAC 62-555.320(21)(b) and *RSWW* 8.5.7.d]

SAMPLE

NOTICE OF INTENT TO USE THE GENERAL PERMIT FOR CONSTRUCTION OF WATER MAIN EXTENSIONS FOR PWSs

Project Name:	Permittee:

_____ w. New or relocated, underground water mains included in this project will be laid to provide a horizontal distance of at least three feet between the outside of the water main and the outside of any existing or proposed vacuum-type sanitary sewer, storm sewer, stormwater force main, or pipeline conveying reclaimed water regulated under Part III of Chapter 62-610, F.A.C.; a horizontal distance of at least six feet between the outside of the water main and the outside of any existing or proposed gravity-type sanitary sewer (or a horizontal distance of at least three feet between the outside of the water main and the outside of any existing or proposed gravity-type sanitary sewer <u>if the bottom of the water main will be laid at least six inches above the top of the sewer</u>); a horizontal distance of at least six feet between the outside of the water main and the outside of any existing or proposed pressure-type sanitary sewer, wastewater force main, or pipeline conveying reclaimed water not regulated under Part III of Chapter 62-610, F.A.C.; and a horizontal distance of at least ten feet between the outside of the water main and all parts of any existing or proposed "on-site sewage treatment and disposal system." [FAC 62-555.314(1); exceptions allowed under FAC 62-555.314(5)]

_____ x. New or relocated, underground water mains that are included in this project and that will cross any existing or proposed gravity- or vacuum-type sanitary sewer or storm sewer will be laid so the outside of the water main is at least six inches above the other pipeline or at least 12 inches below the other pipeline; and new or relocated, underground water mains that are included in this project and that will cross any existing or proposed pressure-type sanitary sewer, wastewater or stormwater force main, or pipeline conveying reclaimed water will be laid so the outside of the water main is at least 12 inches above or below the other pipeline. [FAC 62-555.314(2); exceptions allowed under FAC 62-555.314(5)]

_____ y. At the utility crossings described in Part II.C.1.w above, one full length of water main pipe will be centered above or below the other pipeline so the water main joints will be as far as possible from the other pipeline <u>or</u> the pipes will be arranged so that all water main joints are at least three feet from all joints in vacuum-type sanitary sewers, storm sewers, stormwater force mains, or pipelines conveying reclaimed water regulated under Part III of Chapter 62-610, F.A.C., and at least six feet from all joints in gravity- or pressure-type sanitary sewers, wastewater force mains, or pipelines conveying reclaimed water <u>not</u> regulated under Part III of Chapter 62-610, F.A.C. [FAC 62-555.314(2); exceptions allowed under FAC 62-555.314(5)]

_____ z. New or altered water mains that are included in this project and that will cross above surface water will be adequately supported and anchored, protected from damage and freezing, and accessible for repair or replacement. [FAC 62-555.320(21)(b) and *RSWW* 8.7.1]

_____ aa. New or altered water mains that are included in this project and that will cross under surface water will have a minimum cover of two feet. [FAC 62-555.320(21)(b) and *RSWW* 8.7.2]

_____ bb. New or altered water mains that are included in this project and that will cross under surface water courses greater than 15 feet in width will have flexible or restrained, watertight pipe joints and will include valves at both ends of the water crossing so the underwater main can be isolated for testing and repair; the aforementioned isolation valves will be easily accessible and will <u>not</u> be subject to flooding; the isolation valve closest to the water supply source will be in a manhole; and permanent taps will be provided on each side of the isolation valve within the manhole to allow for insertion of a small meter to determine leakage from the underwater main and to allow for sampling of water from the underwater main. [FAC 62-555.320(21)(b) and *RSWW* 8.7.2]

_____ cc. This project is being designed to include proper backflow protection at those new or altered service connections where backflow protection is required or recommended under Rule 62-555.360, F.A.C., or in *Recommended Practice for Backflow Prevention and Cross-Connection Control*, AWWA Manual M14, as incorporated into Rule 62-555.330, F.A.C.; <u>or</u> the public water system that will own this project after it is placed into operation has a cross-connection control program requiring water customers to install proper backflow protection at those service connections where backflow protection is required or recommended under Rule 62-555.360, F.A.C., or in AWWA Manual M14. [FAC 62-555.360 and AWWA Manual M14 as incorporated into FAC 62-555.330]

_____ dd. Neither steam condensate, cooling water from engine jackets, nor water used in conjunction with heat exchangers will be returned to the new or altered water mains included in this project. [FAC 62-555.320(21)(b) and *RSWW* 8.8.2]

SAMPLE

NOTICE OF INTENT TO USE THE GENERAL PERMIT FOR CONSTRUCTION OF WATER MAIN EXTENSIONS FOR PWSs

Project Name:	Permittee:

2. Explanation for Requirements Marked "NA" in Part II.C.1 Above, Including Justification, Documentation, Assurances, and/or Alternatives as Required by Rule for Exceptions to Requirements in Part II.C.1:

(Engineer to fill in Explanations for "NA"s marked as required per project specifics)

I completed Part II of this notice, and the information provided in Part II and on the attachment(s) to Part II is true and accurate to the best of my knowledge and belief.

Signature, Seal, and Date of Professional Engineer (PE) or Signature and Date of Other Person in Responsible Charge of Designing Project:* *(Developer's Engineer)*	Signature, Seal, and Date of Professional Engineer (PE) or Signature and Date of Other Person in Responsible Charge of Designing Project:*
Printed/Typed Name:	Printed/Typed Name:
License Number of PE or License Number or Title of Other Person in Responsible Charge of Designing Project:*	License Number of PE or License Number or Title of Other Person in Responsible Charge of Designing Project:*
Portion of Preliminary Design Report for Which Responsible:	Portion of Preliminary Design Report for Which Responsible:

* *Except as noted in paragraphs 62-555.520(3)(a) and (b), F.A.C., projects shall be designed under the responsible charge of one or more PEs licensed in Florida. If this project is being designed under the responsible charge of one or more PEs licensed in Florida, Part II of this notice shall be completed, signed, sealed, and dated by the PE(s) in responsible charge. If this project is not being designed under the responsible charge of one or more PEs licensed in Florida, Part II shall be completed, signed, and dated by the person(s) in responsible charge of designing this project.*

SAMPLE

NOTICE OF INTENT TO USE THE GENERAL PERMIT FOR CONSTRUCTION OF WATER MAIN EXTENSIONS FOR PWSs

Project Name:	Permittee:

III. Certifications

A. Certification by Permittee

I am duly authorized to sign this notice on behalf of the permittee identified in Part I.F of this notice. I certify that, to the best of my knowledge and belief, this project complies with Chapter 62-555, F.A.C. I also certify that construction of this project has not begun yet and that, to the best of my knowledge and belief, this project does not include any of the following construction work:

- construction of water mains conveying raw or partially treated drinking water;
- construction of drinking water treatment, pumping, or storage facilities or conflict manholes;
- construction of water mains in areas contaminated by low-molecular-weight petroleum products or organic solvents;
- construction of an interconnection between previously separate public water systems or construction of water mains that create a "new system" as described under subsection 62-555.525(1), F.A.C.; or
- construction of water mains that will remain dry following completion of construction.

(A specific construction permit is required for each project involving any of the above listed construction work.)

I understand that, if this project is designed under the responsible charge of one or more professional engineers (PEs) licensed in Florida, the permittee must retain a Florida-licensed PE to take responsible charge of inspecting construction of this project for the purpose of determining in general if the construction proceeds in compliance with the Department of Environmental Protection construction permit, including the approved preliminary design report, for this project. I understand that the permittee must have complete record drawings prepared for this project. I also understand that the permittee must submit a certification of construction completion to the Department and obtain written approval, or clearance, from the Department before the permittee places this project into operation for any purpose other than disinfection or testing for leaks.

Signature and Date	Printed or Typed Name	Title

B. Certification by PWS Supplying Water to Project

I am duly authorized to sign this notice on behalf of the PWS identified in Part I.G of this notice. I certify that said PWS will supply the water necessary to meet the design water demands for this project. As indicated below, the water treatment plant(s) to which this project will be connected has(have) the capacity necessary to meet the design water demands for this project, and I certify that all other PWS components affected by this project also have the capacity necessary to meet the design water demands for this project. I certify that said PWS is in compliance with applicable planning requirements in Rule 62-555.348, F.A.C.; applicable cross-connection control requirements in Rule 62-555.360, F.A.C.; and to the best of my knowledge and belief, all other applicable rules in Chapters 62-550, 62-555, and 62-699, F.A.C.; furthermore, I certify that, to the best of my knowledge and belief, said PWS's connection to this project will not cause said PWS to be in noncompliance with Chapter 62-550 or 62-555, F.A.C. I also certify that said PWS has reviewed the preliminary design report for this project and that said PWS considers the connection(s) between this project and said PWS acceptable as designed.

- Name(s) of Water Treatment Plant(s) to Which this Project Will Be Connected: David L. Tippin Water Treatment Facility/Morris Bridge Water Treatment Plant
- Total Permitted Maximum Day Operating Capacity of Plant(s), gpd: 120 MGD/40 MGD
- Total Maximum Day Flow at Plant(s) as Recorded on Monthly Operating Reports During Past 12 Months, gpd: 118.1 MGD

Signature and Date	Chris Barquin Printed or Typed Name	Chief Design Engineer Title

C. Certification by PWS that Will Own Project After It Is Placed into Permanent Operation

I am duly authorized to sign this notice on behalf of the PWS identified in Part I.H of this notice. I certify that said PWS will own this project after it is placed into permanent operation. I also certify that said PWS has reviewed the preliminary design report for this project and that said PWS considers this project acceptable as designed.

Signature and Date	Chris Barquin Printed or Typed Name	Chief Design Engineer Title

SAMPLE

NOTICE OF INTENT TO USE THE GENERAL PERMIT FOR CONSTRUCTION OF WATER MAIN EXTENSIONS FOR PWSs

Project Name:	Permittee:

D. Certification by Professional Engineer(s) in Responsible Charge of Designing Project*

I, the undersigned professional engineer licensed in Florida, am in responsible charge of designing this project. I certify that, to the best of my knowledge and belief, the design of this project complies with Chapter 62-555, F.A.C. I also certify that, to the best of my knowledge and belief, this project is not being designed to include any of the following construction work:

- construction of water mains conveying raw or partially treated drinking water;
- construction of drinking water treatment, pumping, or storage facilities or conflict manholes;
- construction of water mains in areas contaminated by low-molecular-weight petroleum products or organic solvents;
- construction of an interconnection between previously separate public water systems or construction of water mains that create a "new system" as described under subsection 62-555.525(1), F.A.C.; or
- construction of water mains that will remain dry following completion of construction.

(A specific construction permit is required for each project involving any of the above listed construction work.)

Signature, Seal, and Date:	Signature, Seal, and Date:
Printed/Typed Name:	Printed/Typed Name:
License Number:	License Number:
Portion of Preliminary Design Report for Which Responsible:	Portion of Preliminary Design Report for Which Responsible:

* *Except as noted in paragraphs 62-555.520(3)(a) and (b), F.A.C., projects shall be designed under the responsible charge of one or more professional engineers (PEs) licensed in Florida. If this project is being designed under the responsible charge of one or more PEs licensed in Florida, Part III.D of this notice shall be completed by the PE(s) in responsible charge. If this project is not being designed under the responsible charge of one or more PEs licensed in Florida, Part III.D does not have to be completed.*

SAMPLE